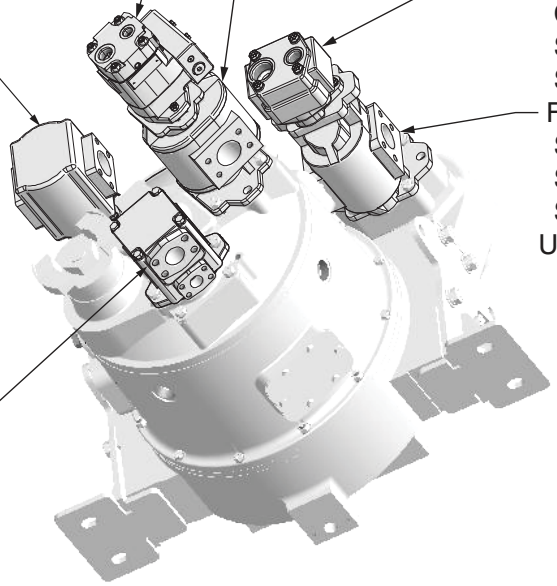Pump Arrangement