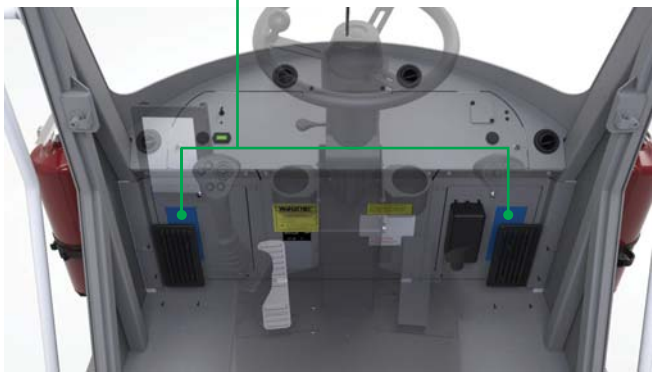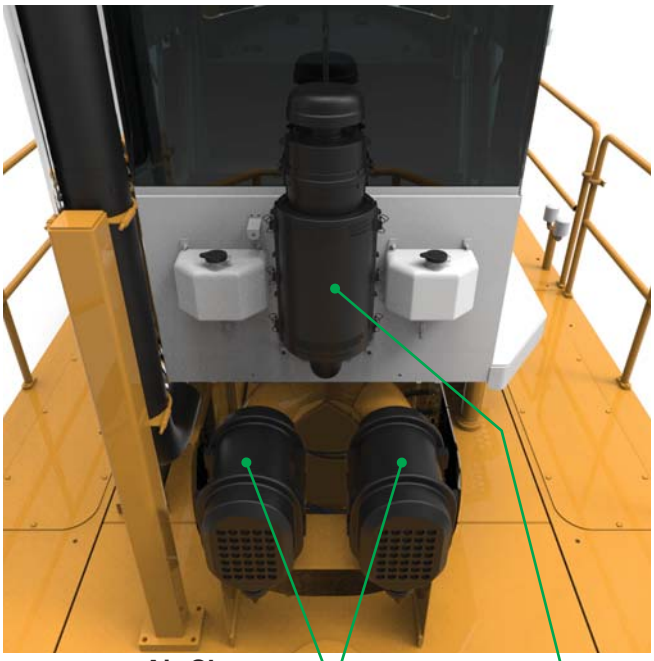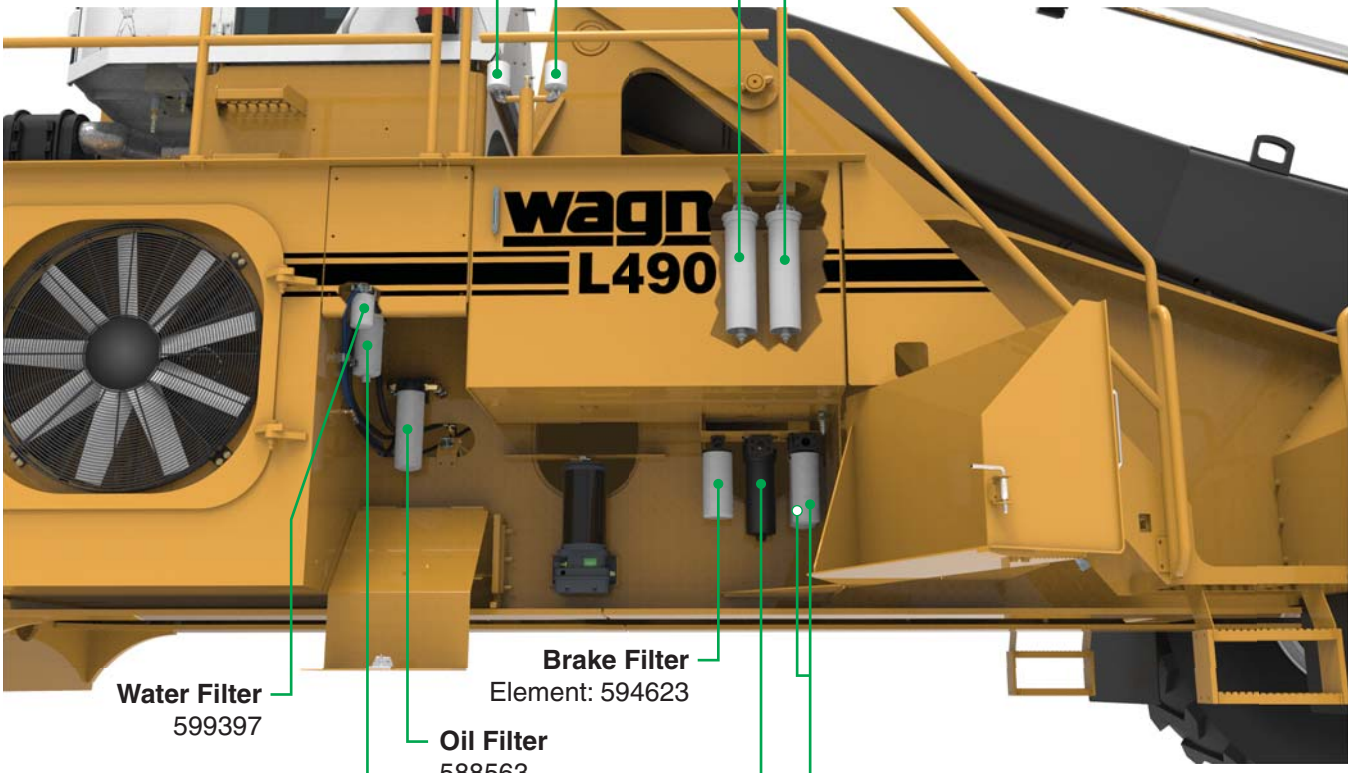Filter Arrangement