Filter Arrangement
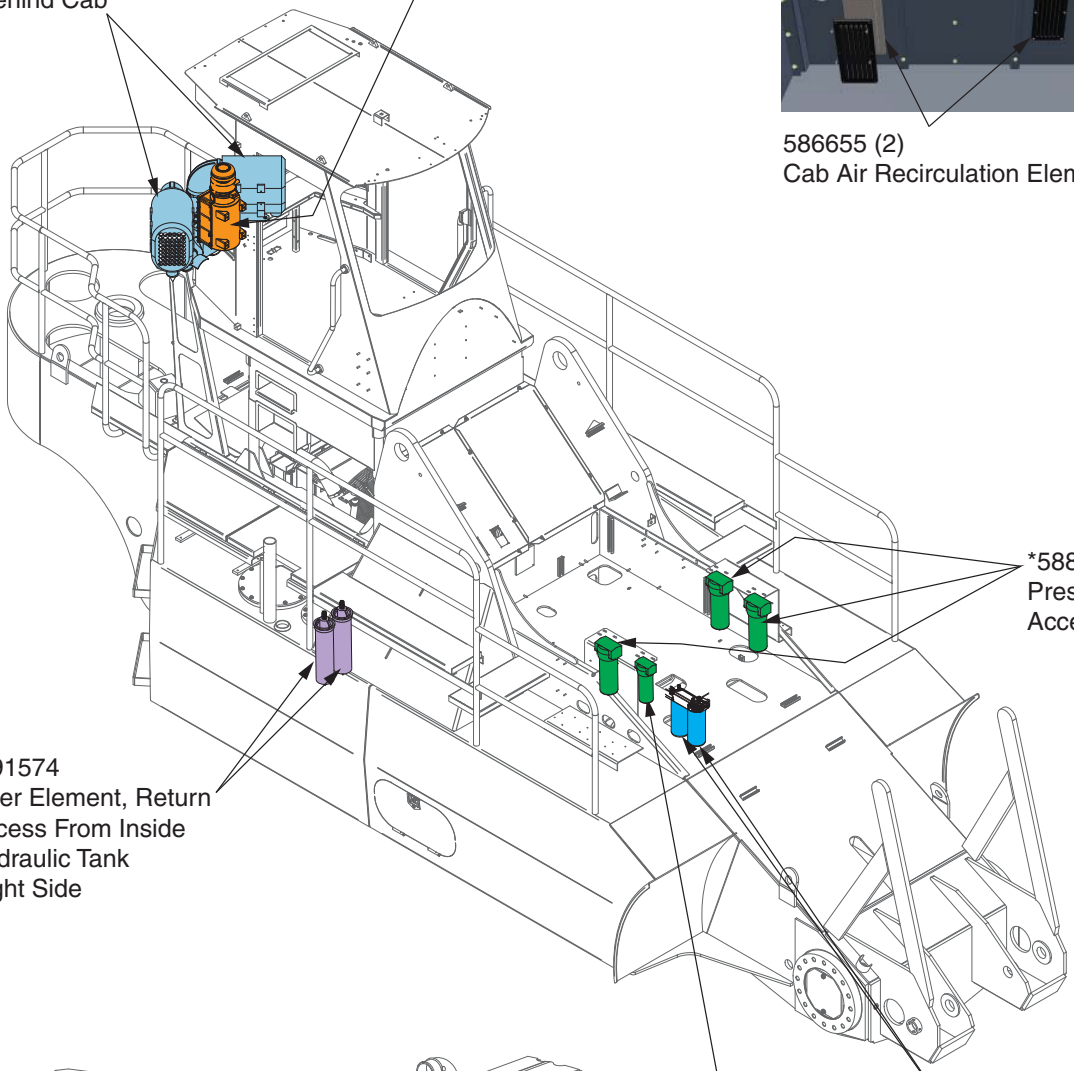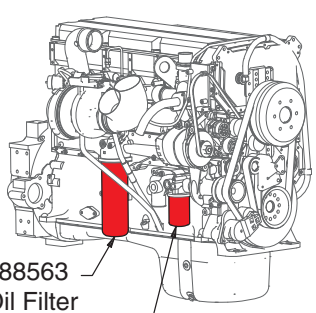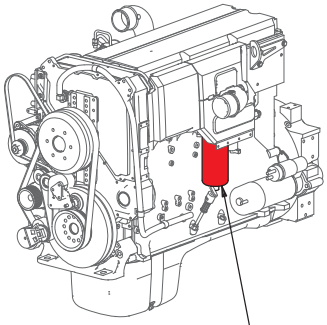
586655 (2)
Cab Air Recirculation Elements