Filter Arrangement
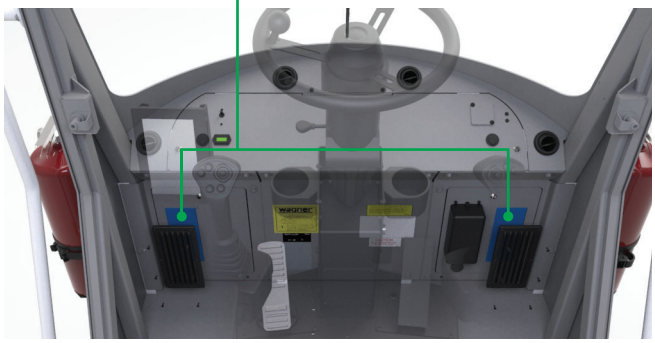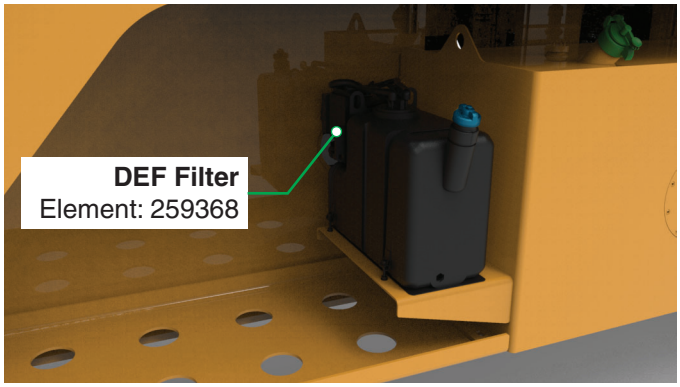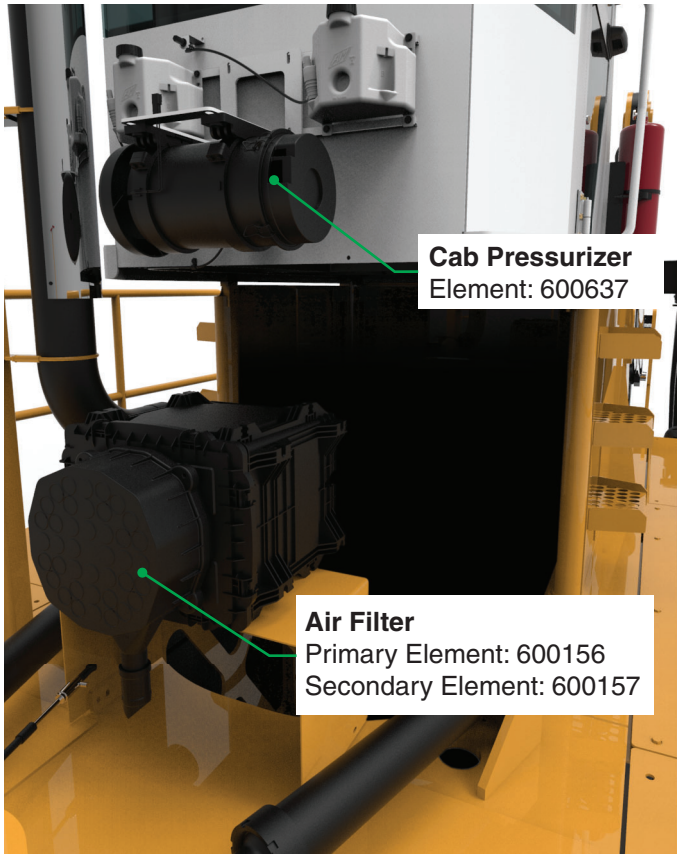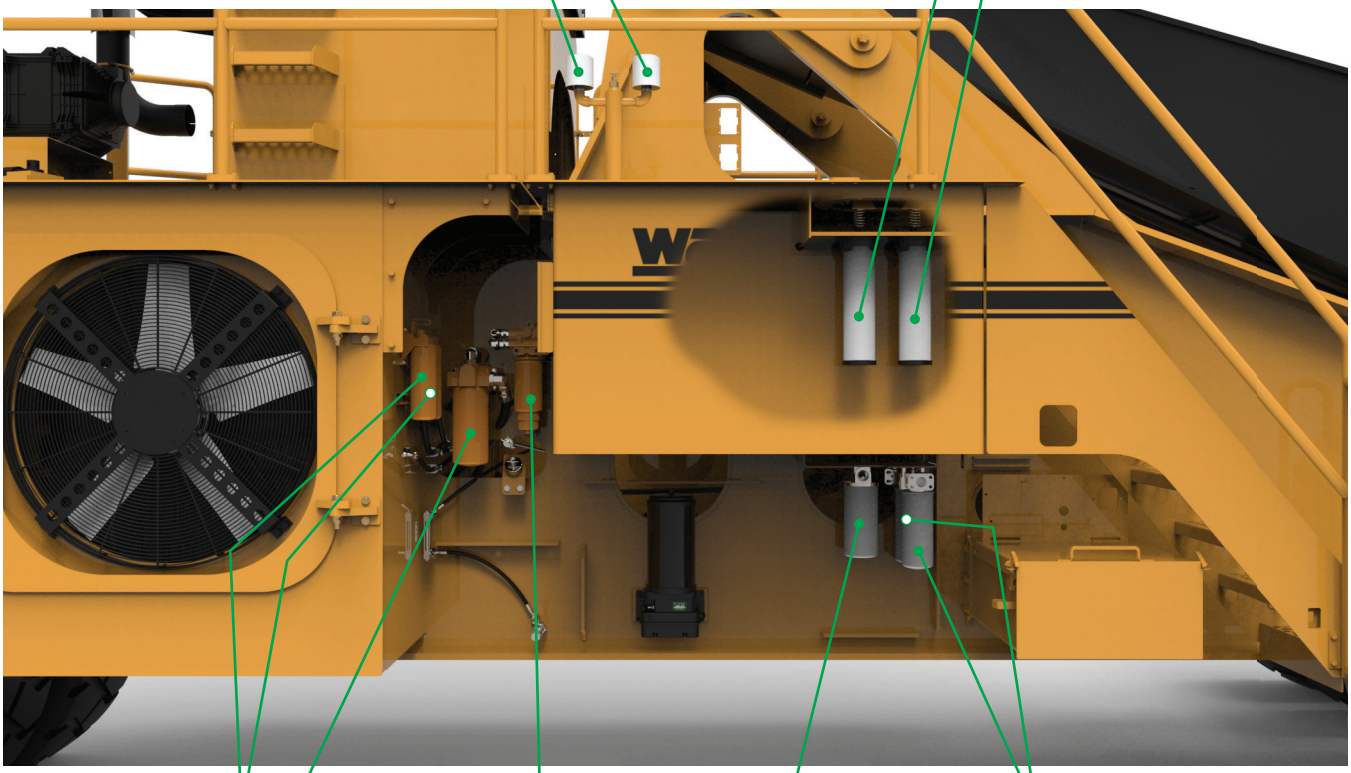
Cabin Filters
Filter Pad: 586655