Schematic - Auto Lube

NOTES:
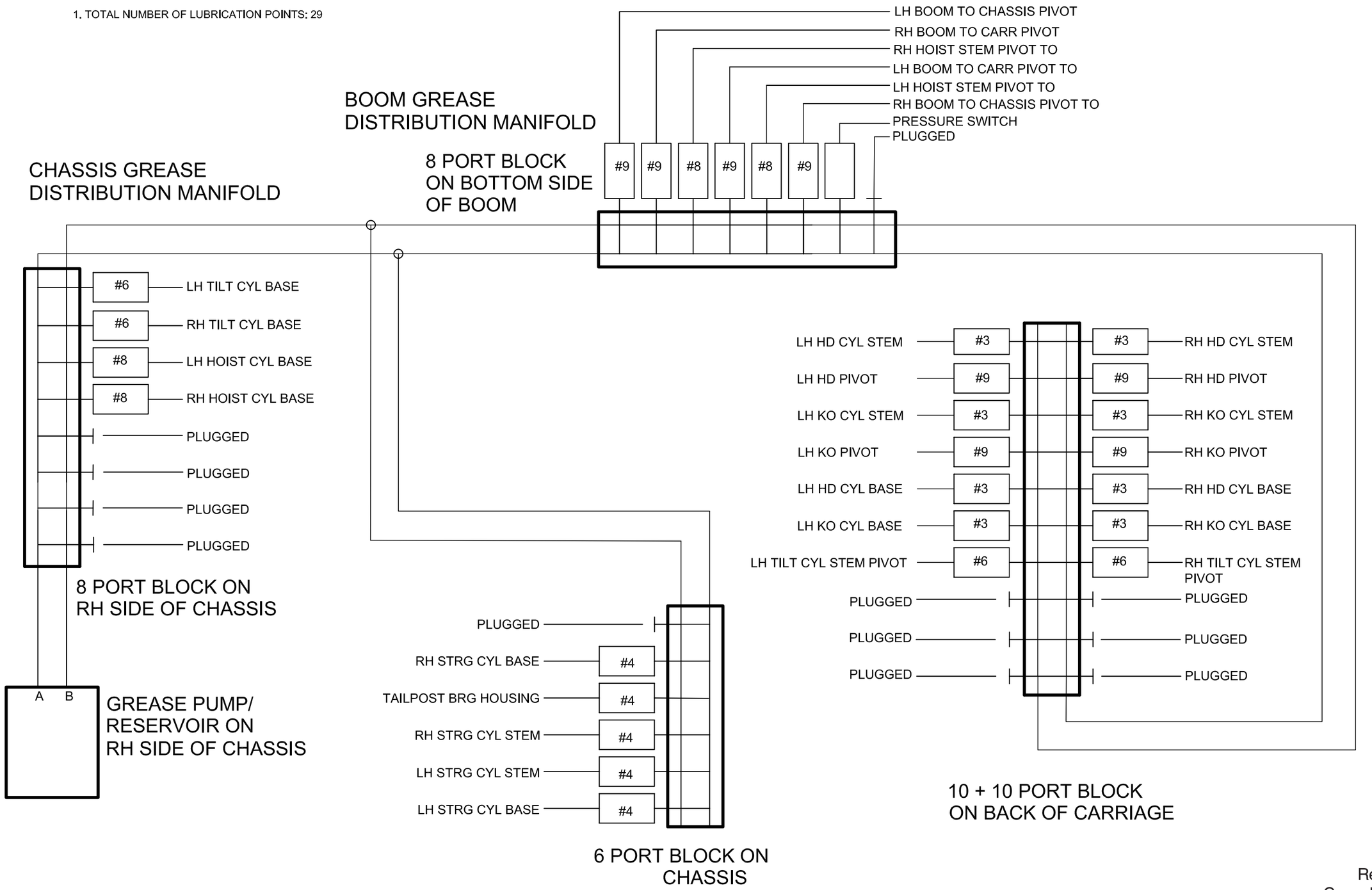
1. TOTAL NUMBER OF LUBRICATION POINTS: 29