# 666B SKIDDER PARTS MANUAL No. 6535

Information contained herein pertains to
Machine serial numbers listed below:

CABLE DETROIT - 513E
CABLE DETROIT - 513F
CABLE DETROIT - 513G
CABLE DETROIT - 526A

GRAPPLE DETROIT - 515A

CABLE CUMMINS - 500D
CABLE CUMMINS - 500E
CABLE CUMMINS - 500F
CABLE CUMMINS - 500G

Record Your Machine
Serial Number Here

RANGER
Forestry Equipment

DECEMBER 1987

Printed in Canada

**WHEN ORDERING PARTS** always give the distributor the Model and Serial Number of the machine.

Order by Part Number, Description and Quantity. Furnish complete SHIPPING INSTRUCTIONS to avoid delay in delivery. Check your order as soon as parts are received.

Clark Equipment Company encourages the use of "Original Equipment Replacement Parts" and the experienced "Service Know-How" available through our distributors.

**QUAND VOUS ORDONNEZ** des pieces, il faut toujours donner le modele et numero de serie de la machine au distributeur.

Faites votre ordre en indiquant le numero de piece, la description et la quantite. Donnez des instructions de livraison completes pour eviter retard. Examinez votre ordre apres recevoir les pieces.

Clark Equipment Company recommande l'utilisation de pieces originales de l'equipement et le service eprouve obtenible de notres distributeurs.

**BEI TEILBESTELLUNG** jeweils Modell und Seriennummer der Maschine angeben.

Bestellungen mussen Teilnummer, Bezeichnung und Menge enthalten. Geben Sie vollstandige LIEFERANWEISUNGEN an, um Verzogerungen bei de Lieferung zu vermeiden. Uberprufen Sie Ihre Bestellung nach Empfang der Teile.

Clark Equipment Company empfiehlt den Gebrauch von fabrikhergestellten Originalteilen und das Wartungs-Know-How, das unsere Handler bieten.

**ENCOMENDANDO AS PECAS,** da sempre ao distribuidor o Modelo e Numero de Serie da maquina.

Faz a encomenda pelo Numero de Peca, a Descricao e Quantidade. Mande INSTRUCOES DE EXPEDICAO completas para evitar demora em entrega. Verifique a sua encomenda assim que receber as pecas.

Clark Equipment Company anima o uso de "Pecas de Restituicao Originais do Equipamento" e o "Servico-Bossa" experiente que ofrecem nossos distribuidores.

**AL ENCARGAR REPUESTOS** es necesario suministrar al distribuidor el modelo y numero de serie de la maquina.

Suministrar siempre el numero de pieza, la descripcion y la cantidad al hacer pedidos. Proporcionar INSTRUCCIONES DE ENVIO completas para evitar demoras en el envio. Verifique su pedido al recibir los repuestos.

Clark Equipment Company sugiere el uso de repuestos originales del equipo y el servicio perito ofrecido por nuestros distribuidores.

## SYMBOLS

| | |
|---|---|
| ○ | See Index |
| ● | When ordering weatherstrip, specify length required |
| § | Not sold separately |
| † | Not illustrated |
| □ | Used on |
| ■ | Not used on |
| ‡ | As required |
| * | Standard |
| ⊠ | Optional |
| → | Thru |
| & → | And after |

## SYMBOLES

| | |
|---|---|
| ○ | Voir table des matières |
| ● | En commandant les bourrelets,spécifier la longueur nécessaire |
| § | Non vendu separement |
| † | Non represente |
| □ | Utilisé sur |
| ■ | Non utilisé |
| ‡ | Suivant besoin |
| * | Standard |
| ⊠ | En Option |
| → | A |
| & → | Et Suivants |

## ZEICHENERKLARUNG

| | |
|---|---|
| ○ | Siehe Inhaltsverzeichnis |
| ● | Bei bestellung der dichtungsstreifen die eforderliche länge angeben |
| § | Nicht einzein Lieferbar |
| † | Nicht Abgebildet |
| □ | Findet Verwendung für |
| ■ | Nicht Zerwendet |
| ‡ | Stuckzahl Angeben |
| * | Standard |
| ⊠ | Sonderausstattung |
| → | Bis |
| & → | Und Fortlaufend |

## SIMBOLOS

| | |
|---|---|
| ○ | Veja indice |
| ● | No casa de um pedido de sitas de vedacão especificar comprimentos necessarios |
| § | Não e vendida separadamente |
| † | Não ilustrado |
| □ | Utilizar el |
| ■ | Não usado em |
| ‡ | Conforme necessario |
| * | Standard |
| ⊠ | Opcional |
| → | Até |
| & → | E Subsequentes |

## SIMBOLOS

| | |
|---|---|
| ○ | Véase índice |
| ● | Al pedir los bulletes, espeifique la longuitud necesaria |
| § | No vendida separadamente |
| † | No illustrado |
| □ | Utilizar el |
| ■ | No utilizada |
| ‡ | Segun necesidad |
| * | Standard |
| ⊠ | Opcional |
| → | Haste |
| & → | Y Subsiguientes |

# ABBREVIATIONS

**alt** ..... alternator
**assy** ..... assembly
**aux** ..... auxiliary

**batty** ..... battery
**blk** ..... black
**brg** ..... bearing

**carr** ..... carrier
**chk** ..... check
**cble** ..... cable
**cm** ..... centimeter
**comprsr** ..... compressor
**conv** ..... converter
**crdle** ..... cradle
**Cum** ..... Cummins
**cyl** ..... cylinder

**diff** ..... differential

**emgcy** ..... emergency
**eng** ..... engine
**ext** ..... extension

**F** ..... front
**FD** ..... front drive
**ftg** ..... fitting
**fwd** ..... Forwarder

**GM** ..... General Motors
**gr** ..... Grapple

**harn** ..... harness
**hd** ..... head
**hd** ..... heavy duty
**hsg** ..... housing
**hyd** ..... hydraulic
**hyd brk & valv assy** ..... hydraulic brake & valve assembly

**inc** ..... includes
**inst** ..... instrument
**int** ..... internal

**LH** ..... left hand
**ld** ..... load

**mech** ..... mechanism
**mm** ..... millimeters
**mtg** ..... mounting

**opt** ..... optional
**overld** ..... overload

**pin** ..... pinion
**press** ..... pressure
**prop** ..... propeller
**psi** ..... pounds per square inch

**RH** ..... right hand
**RD** ..... rear drive
**RFM** ..... Ranger Field Modification
**RSG** ..... Ranger Service Gram
**rops** ..... Roll over Protection ..... structure
**ref** ..... reference
**relf** ..... relief
**rlf** ..... relief

**S/N** ..... serial number
**swb** ..... swamp buggy
**supr'sn** ..... suppression

**T** ..... turbo
**temp** ..... temperature
**trans** ..... transmission

**vlv** ..... valve

**wt** ..... wide tract

# ABBREVIATIONS

**adm** ..... admission
**arb** ..... arbre
**AR** ..... arrière
**art** ..... articulé
**ass** ..... assemblage
**AV** ..... avant

**btn** ..... bouton

**C** ..... central
**carb** ..... carburant
**CD** ..... côté droit
**CG** ..... côté gauche
**contr** ..... contrôle
**conv** ..... convertisseur
**couv** ..... couvercle

**déc** ..... décalcamanie
**déch** ..... décharge
**dém** ..... démarreur
**diff** ..... differential
**direct** ..... direction
**disj** ..... disjonteur

**élé** ..... élément
**embr** ..... embrayage
**engr** ..... engrenage
**ens** ..... ensemble
**étan** ..... étancheite
**ext** ..... exterieur

**filt** ..... filtre

**hyd** ..... hydraulique

**inc** ..... inclus
**inf** ..... inferieur
**int** ..... interieur
**intér** ..... intérrupteur

**jge** ..... jauge
**jnt** ..... joint

**lev** ..... levier
**lubr** ..... lubrification
**lum** ..... lumiere
**mot** ..... moteur

**pc** ..... pièce
**pres** ..... presioón

**rech** ..... rechange
**réd** ..... réduction
**refroid** ..... refroidisseur
**rég** ..... régulateur
**renf** ..... renford
**rép** ..... réparation
**rés** ..... réservoir
**RFM** ..... Modification sur Place Ranger
**roul** ..... roulement

**sec** ..... section
**sens** ..... sensible
**sol** ..... solenóide
**soup** ..... soupape

**temp** ..... temperature
**trs** ..... trousse

**univ** ..... universel

**vibr** ..... vibrations
**vit** ..... vitesse

# ABKÜRZUNGEN

**Abfl** ..... Abfluss
**Abschn** ..... Abschnitt
**Abz** ..... Abziehbild
**Akkum** ..... Akkumulator
**Alter** ..... Alternator
**Ant** ..... Antriebs
**Anz** ..... Anzeige
**Ausl** ..... Ausleger

**B** ..... Beschrift
**Batt** ..... Batterie
**Befest** ..... Befestigung

**Dicht** ..... Dichtung
**Diff** ..... Differentiel
**Drehwand** ..... Drehmomentwandler

**Einh** ..... Einheit
**E-z** ..... Einsatz

**Geh** ..... Gehuse
**Ges** ..... Geschwindigkeit
**Getr** ..... Getriebe

**H** ..... Hinten
**Hltrg** ..... Halterung
**Hyd** ..... Hydraulik

**Komp** ..... Kompressor
**Kontr** ..... Kontrolle
**Konv** ..... Konverter
**Kppl** ..... Kupplung
**Krftst** ..... Kraffstoff

**L** ..... Links
**Lrlf** ..... Leerlauf

**Mess** ..... Messer

**R** ..... Rechts
**Repsatz** ..... Reparatursatz
**RFM** ..... nderung an Ort U Stelle Ranger

**Schau** ..... Schaufel
**Scheibwis** ..... Scheibenwischer
**Schm** ..... Schmierung
**Sich Auto** ..... Sicherungsautomat
**Sicherhgurt** ..... Sicherheitsgurt
**Stromkrunterbrecher** ..... Stromkreisunterbrecher

**Temp** ..... Temperatur
**Tr** ..... Trager
**Trak** ..... Traktor
**Treibrmn** ..... Treibriemen
**Trom** ..... Trommel

**Univ** ..... Unversal

**V** ..... Vorne
**Vent** ..... Ventilator
**Verbdg** ..... Verbindung
**Vntl** ..... Ventil
**Voll/Vollst** ..... Vollstandig
**Vorr** ..... Vorrichtung

**Wand** ..... Wandler
**Wnkl** ..... Winkel

**Zu** ..... Zufluss
**Zug** ..... Zugmaschine
**Zyl** ..... Zylinder

# ABREVIATURAS

**acess** ..... accessrio
**acopl** ..... acoplemento
**adapt** ..... adaptador
**aglom** ..... aglomerao
**alim** ..... alimentao
**aloj** ..... alojamento
**alter** ..... alternador
**amort** ..... amortedor
**arr** ..... arruela
**artl** ..... articulao
**asp** ..... aspirao

**bat** ..... bateria
**bxo** ..... baixo

**calib** ..... calibre
**carr** ..... carregador
**cent** ..... central
**chav** ..... chaveta
**cil** ..... cilindro
**comb** ..... combustvel
**comp** ..... compressor
**condic** ..... condicionador
**conj/cj** ..... conjunto
**contr** ..... controle
**conv** ..... conversor
**corr** ..... corrente
**crr** ..... correia
**cx** ..... caixa

**dec** ..... decalcomania
**desc** ..... descarga
**desliz** ..... deslizante
**DI** ..... dianteiro
**dif** ..... diferencial
**direç** ..... direco
**disj** ..... disjuntor
**el** ..... elemento
**embr** ..... embreagem
**emerg** ..... emergncia
**engr** ..... engrenagem
**equip** ..... equipamento
**esf** ..... esfrico
**estac** ..... estacionamento
**et** ..... etiqueta
**ext** ..... exterior

**ferra** ..... ferramenta
**filt** ..... filtro

**hid** ..... hidrulico
**inc** ..... incluido

**indic** ..... indicador
**inf** ..... inferior
**inst** ..... instrumentos
**int** ..... interior
**inter** ..... interruptor

**jgo** ..... jgo

**LD** ..... lado direito
**LE** ..... lado esquerdo
**limp** ..... limpador
**lubr** ..... lubrifica

**manôm** ..... manmetro
**med** ..... medidor
**mot** ..... motor

**pá-br** ..... pra-brisas
**paraf** ..... parafuso
**pres** ..... presso
**prot** ..... proteo

**rad** ..... radiador
**refor** ..... reforcador
**reg** ..... regulador
**rep** ..... reparo
**resp** ..... respirador
**revs** ..... reservatrio
**RFM** ..... Modifiao Do Campo Ranger
**rolam** ..... rolamento

**seç** ..... seo
**segur** ..... segurana
**sens** ..... sensitiva
**sol** ..... solenide
**sold** ..... soldagem
**suc** ..... suco
**sup** ..... superior
**supt** ..... suporte

**tamb** ..... tambor
**temp** ..... temperatura
**term** ..... termmetro
**TR** ..... traseiro
**trans** ..... transmisso

**unid** ..... unidade
**univ** ..... universal

**válv** ..... vlvula
**ved** ..... vedador
**veic** ..... veculo
**vel** ..... velocidad
**vent** ..... ventilador
**vibr** ..... vibrao

# ABREVIATURAS

**ac** ..... aceite
**acces** ..... accessorio
**acondic** ..... acondiciondor
**acopl** ..... acoplemento
**acum** ..... acumulador
**adapt** ..... adaptador
**allm** ..... alimentacn
**alm** ..... almohadilla
**aloj** ..... alojamento
**alter** ..... alternador
**amort** ..... amortiguador
**aran** ..... arandela
**rb** ..... rbol
**artl** ..... articulacn
**asp** ..... aspiracn

**bat** ..... batera
**cal** ..... calcomana
**chav** ..... chaveta
**cil** ..... cilindro
**coj** ..... cojinete
**comb** ..... combustible
**conj/cj** ..... conjunto
**contr** ..... control
**conv** ..... convertidor
**corr** ..... correa
**crist** ..... cristales
**crr** ..... corredera
**cub** ..... cubierta
**cuch** ..... cucharn

**DE** ..... delantero
**dep** ..... depsito
**desc** ..... descarga
**direc** ..... direccin
**disp** ..... dispositivo
**disy** ..... disyuntor

**el** ..... elemento
**embr** ..... embregue
**emerg** ..... emergenca
**empaq** ..... empaquedura
**engr** ..... engrenaje
**env** ..... envolvente
**esf** ..... esfrico
**estac** ..... estacionamento
**et** ..... etiqueta
**ext** ..... exterior

**filt** ..... filtro

**herra** ..... herramientas
**hid** ..... hidrulico

**inc** ..... incluyo
**ind** ..... indicador
**inf** ..... inferior
**inst** ..... instrumentos
**int** ..... interior
**inter** ..... interruptor

**jgo** ..... juego

**LD** ..... lado derecho
**LI** ..... lado izquierdo
**limp** ..... limpiador
**lubr** ..... lubrificacin
**manôm** ..... manmetro
**med** ..... medidor

**parb** ..... parabrisas
**pescf** ..... pescante
**planet** ..... planetario
**port** ..... portador
**pres** ..... presin
**prot** ..... protector

**rad** ..... radiador
**rec** ..... recambio
**reg** ..... regulador
**rep** ..... reparo
**res** ..... resorte
**resp** ..... respirador
**RFM** ..... Modificacin De Terreno Ranger
**rod** ..... rodamiento

**sec** ..... seccin
**segur** ..... seguridad
**sens** ..... sensora
**sol** ..... solenide
**sold** ..... soldadura
**sop** ..... soporte
**suc** ..... succin
**sup** ..... superior

**tamb** ..... tambor
**temp** ..... temperatura
**termô** ..... termmetro
**TR** ..... trasero
**trans** ..... transmissin

**unid** ..... unidad
**univ** ..... universal

**vlv** ..... vlvula
**vel** ..... velocidad
**vent** ..... ventilador
**vibr** ..... vibrao

# ALPHABETICAL INDEX


## A

ACCELERATOR & LINKAGE ..... D 1 20080
..... D 1 20100
AIR CLEANER ..... A 1 25100
..... A 1 25200
AIR CLEANER MUFFLER & MOUNTING ..... A 1 20200
AIR CLEANER MUFFLER AND MOUNTING ..... A 1 20125
..... A 1 20150
AIR COMPRESSOR ⊠ ..... F 2 92000
ALTERNATOR ..... F 2 50060
..... F 2 50105
ALTERNATOR BELT ..... J 1 20000
ARCH & GRAPPLE CONTROLS ..... A 10 20150
ARCH & GRAPPLE HYDRAULICS ..... A 10 10030
ARCH ASSEMBLY ..... B 5 10045
ARCH CYLINDER ASSEMBLY ..... E 1 12000
AUXILIARY STEERING ⊠ ..... A 9 14000
AXLE ASSEMBLY, FRONT - FD-17600 ..... A 4 10000
AXLE ASSEMBLY, FRONT - 17800 - HD ⊠ ..... A 4 10600
AXLE ASSEMBLY, FRONT - 17600 WT ⊠ ..... A 4 11000
AXLE ASSEMBLY, REAR RD 19500 HEAVY DUTY ..... A 4 20700
AXLE ASSEMBLY, REAR RD-17900 ..... A 4 21200
AXLE ASSEMBLY, REAR RD17600 WIDE TRACK ⊠ ..... A 4 21000
AXLE ASSEMBLY, REAR RD17800 HEAVY DUTY ..... A 4 20610
AXLE ASSEMBLY,FRONT - 17900 ..... A 4 10700
AXLE CRADLE ASSEMBLY ..... B 1 15070

## B

BATTERY & BATTERY MOUNT ..... F 1 10020
..... F 1 10045
..... F 1 10240
..... F 1 10290
BLADE & MOUNTING ..... B 3 10010
BRAKE CYLINDER ASSEMBLY, WINCH-GEARMATIC ..... A 6 18000
..... A 6 19000
BRAKE-PILLOW BLOCK & MOUNTING ..... A 7 40150
BRAKE, PARKING ..... A 7 25000
BUTTONS ..... F 2 95050

## C

CALIPER DISC BRAKE ..... A 7 10150
CANOPY ..... F 2 10040
..... F 2 10100
CHECK VALVE ASSY ..... E 2 50000
CLIPS ..... F 2 95000
CLUTCH ASSEMBLY, FORWARD, REVERSE & LOW ..... A 3 11000
CLUTCH ASSEMBLY, HIGH ..... A 3 12000
CLUTCH ASSEMBLY, WINCH ..... A 6 17000
CONTROL VALVE, ARCH, GRAPPLE & MOTOR HEAD ..... E 2 30650
CONTROL VALVE, STEER & BLADE ..... E 2 30100
..... E 2 30200
CONTROL VALVE, TRANSMISSION ..... A 3 13050
CONTROLS-ARCH & GRAPPLE ..... A 10 20150
CONTROLS, SERVICE BRAKE, DRUM ..... A 7 15100
..... A 7 15150
..... A 7 15200
CONTROLS, SERVICE BRAKE, DISC ..... A 7 15300
..... A 7 15350
..... A 7 15400
..... A 7 15450
CONTROLS, STEER & BLADE ..... A 9 20100
..... A 9 20200
CONTROLS, TRANSMISSION ..... A 3 20050
..... A 3 20100
CONTROLS, WINCH ..... A 6 10040
..... A 6 11010
CONVERTER ASSEMBLY ..... A 2 10050
..... A 2 10150
..... A 2 10200
CRADLE LUBRICATION ..... B 1 16000
CYLINDER ASSEMBLY, ARCH ..... E 1 12000
CYLINDER ASSEMBLY, LOG GRAPPLE ..... E 1 13000
..... E 1 13050
CYLINDER ASSEMBLY, STEER & BLADE ..... E 1 10010
..... E 1 10020
..... E 1 10040

## D

DECALS ..... F 2 60050
DIFFERENTIAL & CARRIER ASSEMBLY, FRONT FD-17600 ..... A 4 14950
DIFFERENTIAL & CARRIER ASSEMBLY, FRONT - 17600 ..... A 4 15000
DIFFERENTIAL & CARRIER ASSEMBLY,
FRONT FD-17900 & FD-17800 ..... A 4 15600
..... A 4 15610
DIFFERENTIAL & CARRIER ASSEMBLY, REAR RD-17600 ..... A 4 21500
DIFFERENTIAL & CARRIER ASSEMBLY,
REAR RD-17800&17900 ..... A 4 25600
DIFFERENTIAL & CARRIER ASSEMBLY,
REAR RD-19500⊠ ..... A 4 25700
DIFFERENTIAL & CARRIER ASSEMBLY, REAR RD-19640 ..... A 4 25900

## E

ELECTRICAL SYSTEM ..... F 2 51080
..... F 2 51200
..... F 2 51250
ENGINE FILTERS ..... J 1 50000
ENGINE MOUNTING & LUBRICATION ..... A 1 15150
..... A 1 15200
..... A 1 15250
ENGINE MOUNTINGS GM ..... A 1 15060
EXHAUST SYSTEM ..... A 1 20125
..... A 1 20150
..... A 1 20200

## F

FAIRLEAD & MOUNTING ..... B 2 10000
FAN BELT CHART ..... J 1 10000
FILTER, ENGINE ..... J 1 50000
FIRE EXTINGUISHER ..... F 2 80000
FIRE SUPPRESSION KIT ..... H 1 10050
FIREWALL ASSEMBLY ..... B 4 10050
..... B 4 10065
..... B 4 10070
..... B 4 10130
FLOORBOARD & SEAT SUPPORT ..... C 1 10040
..... C 1 10065
FRAME, REAR ..... B 1 20050
..... B 1 20175
FRONT AXLE ASSEMBLY ..... A 4 10000
..... A 4 10600
..... A 4 10700
..... A 4 11000
FRONT DIFFERENTIAL & CARRIER ASSEMBLY ..... A 4 14950
..... A 4 15000
..... A 4 15600
..... A 4 15610
..... A 4 21500
FRONT FRAME ..... B 1 10045
..... B 1 10070
FUEL TANK & LINES ..... D 1 10040
..... D 1 10090

# ALPHABETICAL INDEX (cont.)


## G

GRAPPLE ASSEMBLY 102 IN - 2,59 M ..... B 6 10020
GRAPPLE ASSEMBLY 70 IN -1778,0 MM ..... B 6 10000
GRAPPLE LOCK VALVE ..... E 2 40000
GRAPPLE ROTATING HEAD ASSEMBLY ..... E 2 70000

## H

HOUSING ASSEMBLY, WINCH ..... A 6 16000
HYDRAULIC SYSTEM,
TRANSMISSION & TORQUE CONVERTER ..... A 8 10050
..... A 8 10110
..... A 8 10130
HYDRAULIC TANK FILTER ASSEMBLY ..... A 9 16050
HYDRAULICS-ARCH & GRAPPLE ..... A 10 10030
HYDRAULICS-MOTOR HEAD ..... A 10 12000
HYDRAULICS, STEER & BLADE ..... A 9 10060
HYDRAULICS, WINCH ..... A 6 10040
..... A 6 11010

## I

INSTRUMENT PANEL ..... F 1 20050
..... F 1 20350
INSULATION-CANOPY ..... G 6 10000
INSULATION-FIREWALL ..... G 3 10000
INSULATION-FLOOR & SEAT ..... G 4 10000
INSULATION-FRONT FRAME ..... G 2 10000
INSULATION-INSTRUMENT PANEL ☒ ..... G 5 10000
INSULATION-MUFFLER ☒ ..... G 1 10000

## L

LIGHTS☒ ..... F 2 90000
..... F 2 90050
..... F 2 90450
..... F 2 90500
LOG GRAPPLE CYLINDER ASSEMBLY 70 IN - 1778,0 MM ..... E 1 13000
LOG GRAPPLE CYLINDER ASSEMBLY 102 IN - 2590,8 MM ..... E 1 13050

## M

MID-MOUNT BEARING ASSEMBLY ..... A 7 50050
MOTOR HEAD HYDRAULICS ..... A 10 12000
MUFFLER ..... A 1 20125
..... A 1 20150
..... A 1 20200

## P

PARKING BRAKE ..... A 7 25000
PLANET CARRIER ASSEMBLY FD 17600 & RD 17600 ..... A 4 30100
PLANET CARRIER ASSEMBLY FD & RD 17620 & 17800 ..... A 4 30115
PLANET CARRIER ASSEMBLY 17630,
19600, 19640, 19650 & 33600 ..... A 4 30320
PROPELLER SHAFT ASSEMBLY TRANSMISSION/WINCH ..... A 5 20050
PROPELLER SHAFT ASSEMBLY,
TRANSMISSION/CONVERTER ..... A 5 10050
..... A 5 10210
PROPELLER SHAFT ASSEMBLY,
TRANSMISSION-FRONT AXLE ..... A 5 30100
PROPELLER SHAFT ASSEMBLY, REAR AXLE INPUT ..... A 5 40150
PROPELLER SHAFT ASSEMBLY, REAR AXLE INPUT☒ ..... A 5 40250
PROPELLER SHAFT ASSEMBLY, REAR AXLE INPUT ..... A 5 40475
..... A 5 40500
PROPELLER SHAFT ASSEMBLY,
TRANSMISSION/MID MOUNT BEARING ..... A 5 50050
PROPELLER SHAFT ASSEMBLY,
TRANSMISSION/PILLOW BLOCK ..... A 5 60025
PUMP & MOTOR ASSEMBLY ☒ ..... E 2 20000

## R

RADIATOR & CONNECTIONS ..... A 1 10305
..... A 1 10320
..... A 1 10330
..... A 1 10500
..... A 1 10550
..... A 1 10575
..... A 1 10600
REAR AXLE ASSEMBLY ..... A 4 20610
..... A 4 20700
..... A 4 21000
..... A 4 21200
REAR AXLE MOUNTING ..... B 1 23000
..... B 1 23050
..... B 1 23100
..... B 1 23150
..... B 1 23200
REAR DIFFERENTIAL & CARRIER ASSEMBLY ..... A 4 25600
..... A 4 25700
..... A 4 25900
REAR FRAME & MOUNTING ..... B 1 20050
..... B 1 20175
REGULATOR VALVE ..... A 2 25050
RIM ASSEMBLY - 16.9 X 30 TIRES ..... F 2 96700
RIM ASSEMBLY - 18.4 X 26 TIRES ..... F 2 96650
..... F 2 97000
RIM ASSEMBLY - 18.4 X 34 TIRES ..... F 2 96600
..... F 2 96980
RIM ASSEMBLY - 18.4 X 38 TIRES ..... F 2 96550
RIM ASSEMBLY - 23.1 X 26 TIRES ..... F 2 96500
..... F 2 96900
RIM ASSEMBLY - 24.5 X 32 TIRES ..... F 2 96470
..... F 2 96880
RIM ASSEMBLY - 28.1 X 26 TIRES ..... F 2 96400
..... F 2 96800
RIM ASSEMBLY - 30.5 X 32 TIRES ..... F 2 96370
..... F 2 96750
RING GEAR & PINION ASSEMBLY, WINCH-GEARMATIC ..... A 6 20000
ROTATING HEAD ASSEMBLY ..... E 2 70000

## S

SEAT ASSEMBLY ..... F 2 40000
SEAT ASSEMBLY, ROTATING ..... F 2 40050
SECONDARY BRAKE CONTROLS ☒ ..... A 7 30100
SERVICE BRAKE - CALIPER DISC ..... A 7 10150
SERVICE BRAKE - DISC ☒ ..... A 7 10100
SERVICE BRAKE - DISC ..... A 7 10200
SERVICE BRAKE - DRUM ..... A 7 10000
SERVICE BRAKE - DRUM ☒ ..... A 7 10050
SERVICE BRAKE CONTROLS - DRUM ..... A 7 15100
..... A 7 15150
..... A 7 15200
SERVICE BRAKE CONTROLS - DISC ..... A 7 15300
SERVICE BRAKE CONTROLS - DISC ☒ ..... A 7 15350
SERVICE BRAKE CONTROLS - DISC ..... A 7 15400
SERVICE BRAKE CONTROLS - DISC ☒ ..... A 7 15450
STEER & BLADE CONTROLS ..... A 9 20100
..... A 9 20200
STEER & BLADE CYLINDER ASSEMBLY ..... E 1 10010
..... E 1 10020
..... E 1 10040
STEER & BLADE HYDRAULICS ..... A 9 10060

# ALPHABETICAL INDEX (cont.)

## T


THROTTLE CONTROLS ..... D 1 20080
..... D 1 20100
TRANSMISSION & CONVERTER HYDRAULICS ..... A 8 10050
..... A 8 10110
..... A 8 10130
TRANSMISSION ASSEMBLY - 2420 ..... A 3 10000
..... A 3 10050
TRANSMISSION CLUTCH ASSEMBLY
- FORWARD, REVERSE & LOW ..... A 3 11000
TRANSMISSION CLUTCH ASSEMBLY, HIGH ..... A 3 12000
TRANSMISSION CONTROL VALVE ..... A 3 13050
TRANSMISSION CONTROLS ..... A 3 20050
..... A 3 20100
TRANSMISSION MOUNTING ..... A 3 15050
..... A 3 15150


## V


VALVE, GRAPPLE LOCK ..... E 2 40000
VALVE, REGULATOR ..... A 2 25050
VALVE, STEER & BLADE ..... E 2 30100
..... E 2 30200
VALVE, TRANSMISSION CONTROL ..... A 3 13050


## W


WINCH ADAPTER ASSEMBLY-GEARMATIC-19 ..... A 6 21050
WINCH BRAKE CYLINDER ASSEMBLY-GEARMATIC-19 ..... A 6 19000
WINCH CABLE DRUM & BRAKE BANDS-GEARMATIC-19 ..... A 6 18000
WINCH CLUTCH ASSEMBLY-GEARMATIC-19 ..... A 6 17000
WINCH CONTROLS & HYDRAULICS ..... A 6 10040
WINCH CONTROLS & HYDRAULICS-CLARK ..... A 6 11010
WINCH HOUSING ASSEMBLY-GEARMATIC 19 ..... A 6 16000
WINCH MASTER CONTROL UNIT-GEARMATIC ..... A 6 13000
WINCH MASTER CONTROL UNIT-CLARK ..... A 6 14000
WINCH RING GEAR AND PINION ASSEMBLY-GEARMATIC-19 .. A 6 20000
WINCH-CABLE DRUM DRIVE SHAFT & CLUTCH W-300 ..... A 6 22010
WINCH-CABLE DRUM DRIVE SHAFT & CLUTCH W311-1 ..... A 6 23000
WINCH-INPUT CLUTCH, PINION SHAFT
& RING GEAR SHAFT GROUP W-300 ..... A 6 24050
WINCH, INPUT CLUTCH, PINION SHAFT
& RING GEAR SHAFT W-311-1 ..... A 6 24150

# TABLE DES MATIÈRES

## A


ACCÉLÉRATEUR ET TRINGLERIE ..... D 1 20080
..... D 1 20100
ALTERNATEUR ..... F 2 50060
..... F 2 50105
ARBRE D'ENTRAÎNEMENT, TRANSMISSION/PALIER ..... A 5 60025
ARBRE D'ENTRAÎNEMENT, TRANSMISSION/CONVERTISSEUR, ENSEMBLE ..... A 5 10050
..... A 5 10210
ARBRE D'ENTRAÎNEMENT, TRANSMISSION/PALIER CENTRAL, ENSEMBLE ..... A 5 50050
ARCHE ET GRAPPIN, CIRCUIT HYDRAULIQUE ..... A 10 10030
ARCHE ET GRAPPIN, COMMANDES ..... A 10 20150
ASSEMBLAGE D'ARCHE ..... B 5 10045
ASSEMBLAGE DE LA JANTE - 30.5 X 32 PNEUMATIQUE ..... F 2 96370
ASSEMBLAGE DE LA JANTE - 28.1 X 26 PNEUMATIQUE ..... F 2 96400
ASSEMBLAGE DE LA JANTE - 24.5 X 32 PNEUMATIQUE ..... F 2 96470
ASSEMBLAGE DE LA JANTE - 23.1 X 26 PNEUMATIQUE ..... F 2 96500
ASSEMBLAGE DE LA JANTE - 18.4 X 38 PNEUMATIQUE ..... F 2 96550
ASSEMBLAGE DE LA JANTE - 18.4 X 34 PNEUMATIQUE ..... F 2 96600
ASSEMBLAGE DE LA JANTE - 18.4 X 26 PNEUMATIQUE ..... F 2 96650
ASSEMBLAGE DE LA JANTE - 16.9 X 30 PNEUMATIQUE ..... F 2 96700
ASSEMBLAGE DE LA JANTE - 30.5 X 32 PNEUMATIQUE ..... F 2 96750
ASSEMBLAGE DE LA JANTE - 28.1 X 26 PNEUMATIQUE ..... F 2 96800
ASSEMBLAGE DE LA JANTE - 24.5 X 32 PNEUMATIQUE ..... F 2 96880
ASSEMBLAGE DE LA JANTE - 23.1 X 26 PNEUMATIQUE ..... F 2 96900
ASSEMBLAGE DE LA JANTE - 18.4 X 34 PNEUMATIQUE ..... F 2 96980
ASSEMBLAGE DE LA JANTE - 18.4 X 26 PNEUMATIQUE ..... F 2 97000
ASSEMBLYE D'EMBRAYAGE DE LA TRANSMISSION, ÉLÉVÉE .. A 3 12000


## B


BATTERIE & FIXATION DE BATTERIE ..... F 1 10020
..... F 1 10045
..... F 1 10240
..... F 1 10290
BOUTONS ..... F 2 95050


## C


CHÂSSIS ARRIÈRE & MONTAGE ..... B 1 20050
..... B 1 20175
CHÂSSIS AVANT & ARRIÈRE ..... B 1 10045
..... B 1 10070
CHÂSSIS, ARRIÈRE ..... B 1 20050
..... B 1 20175
CIRCUIT HYDRAULIQUE DE BOÎTE DE VITESSES ET DE CONVERTISSEUR ..... A 8 10050
..... A 8 10110
..... A 8 10130
CIRCUIT HYDRAULIQUE, DIRECTION ET LAME ..... A 9 10060
CLOISON PARE-FEU ..... B 4 10050
..... B 4 10065
..... B 4 10070
..... B 4 10130
COMMANDE DE FREIN SECONDAIRE ☒ ..... A 7 30100
COMMANDES D'ACCÉLÉRATION ..... D 1 20080
..... D 1 20100
COMMANDES DE LA TRANSMISSION ..... A 3 20050
..... A 3 20100
COMMANDES DE TREUIL ET D'HYDRAULIQUE-CLARK ..... A 6 11010
COMMANDES DE TREUIL ET DHYDRAULIQUE ..... A 6 10040
COMMANDES, BOÎTE DE VITESSES ..... A 3 20050
..... A 3 20100
COMMANDES, DIRECTION ET LAME ..... A 9 20100
..... A 9 20200
COMMANDES, DISQUE DE FREIN STANDARD ..... A 7 15300
..... A 7 15350
..... A 7 15400
..... A 7 15450
COMMANDES, TAMBOUR DE FREIN STANDARD ..... A 7 15100
..... A 7 15150
..... A 7 15200
COMMANDES, TREUIL ..... A 6 10040
..... A 6 11010
COMPRESSEUR D'AIR ☒ ..... F 2 92000
CONTRÔLES DE GUIDAGE ET DE LAME ..... A 9 20100
..... A 9 20200
CONTRÔLES-ARC ET GRAPIN ..... A 10 20150
CONVERTISSEUR, ENSEMBLE ..... A 2 10050
..... A 2 10150
..... A 2 10200


## D


DAIS ..... F 2 10040
..... F 2 10100
DÉCALQUES ..... F 2 60050
DIFFÉRENTIEL ARRIÈRE ET ENSEMBLE PORTEUR ..... A 4 25600
..... A 4 25700
..... A 4 25900
DIFFÉRENTIEL AVANT ET ENSEMBLE PORTEUR ..... A 4 14950
..... A 4 15000
..... A 4 15600
..... A 4 15610
..... A 4 21500
DIRECTION AUXILIAIRE ☒ ..... A 9 14000
DISC DE CONTRÔLES DU FREIN DE SERVICE ..... A 7 15300
DISC DE CONTRÔLES DU FREIN DE SERVICE ☒ ..... A 7 15350
DISC DE CONTRÔLES DU FREIN DE SERVICE ..... A 7 15400
DISC DE CONTRÔLES DU FREIN DE SERVICE ☒ ..... A 7 15450


## E


EMBRAYAGE, ENSEMBLE, HAUT ..... A 3 12000
ENSEMBLE ARBRE CARDAN, TRANSMISSION-PONT AVANT .. A 5 30100
ENSEMBLE BAGUE ET PIGNON, TREUIL-GEARMATIC ..... A 6 20000
ENSEMBLE BOÎTIER, TREUIL ..... A 6 16000
ENSEMBLE CYLINDRE DE FREIN, TREUIL-GEARMATIC ..... A 6 18000
..... A 6 19000
ENSEMBLE CYLINDRE ET ARCH ..... E 1 12000
ENSEMBLE CYLINDRE, DIRECTION ET LAME ..... E 1 10010
..... E 1 10010
..... E 1 10020
..... E 1 10020
..... E 1 10040
..... E 1 10040
ENSEMBLE D'APTATEUR DU TREUIL-GEARMATIC-19 ..... A 6 21050
ENSEMBLE D'ARBRE D'ENTRAINEMENT-BOÎTE DE VITESSE/TREUIL ..... A 5 20050
ENSEMBLE D'ARBRE D'ENTRAÎNEMENT, ESSIEUX ARRIÈRE ..... A 5 40150
ENSEMBLE D'ARBRE D'ENTRAÎNEMENT, ESSIEUX ARRIÈRE☒ ..... A 5 40250
ENSEMBLE D'ARBRE D'ENTRAÎNEMENT, ESSIEUX ARRIÈRE ..... A 5 40475
..... A 5 40500
ENSEMBLE D'EMBRAYAGE DE BOÎTE DE VITESSE - MARCH AV & AR & BASSE ..... A 3 11000
ENSEMBLE D'EMBRAYAGE DU TREUIL-GEARMATIC-19 ..... A 6 17000
ENSEMBLE D'ENCASTREMENT DU TREUIL-GEARMATIC 19 ... A 6 16000
ENSEMBLE D'ENGRENAGE DE LA COURONNE DU TREUIL ET DE PIGNON DU TREUIL-GEARMATIC-19 ..... A 6 20000
ENSEMBLE DE CULASSE ROTATIVE DE GRAPPIN ..... E 2 70000
ENSEMBLE DE CULASSE ROTATIVE ..... E 2 70000
ENSEMBLE DE CYLINDRE À FREIN DU TREUIL-GEARMATIC-19 ..... A 6 19000
ENSEMBLE DE DIFFÉRENTIEL & PORTE-PLAN, AVANT FD-17600 ..... A 4 14950

# TABLE DES MATIÈRES (cont.)


## E

ENSEMBLE DE DIFFÉRENTIEL & PORTE-PLAN, AVANT - 17600 ..... A 4 15000
ENSEMBLE DE DIFFÉRENTIEL & PORTE-PLAN, AVANT FD-17900 & FD-17800 ..... A 4 15600
..... A 4 15610
ENSEMBLE DE GRAPPIN 102 IN - 2,59 M ..... B 6 10020
ENSEMBLE DE GRAPPIN 70 IN -1778,0 MM ..... B 6 10000
ENSEMBLE DE POMPE ET DE MOTEUR ☒ ..... E 2 20000
ENSEMBLE DE SIÈGE ROTATIF ..... F 2 40050
ENSEMBLE DIFFÉRENTIAL-PALIER ET COUSSINENT, ARRIÈRE RD-17600 ..... A 4 21500
ENSEMBLE DIFFÉRENTIAL-PALIER ET COUSSINENT, ARRIÈRE RD-17800&17900 ..... A 4 25600
ENSEMBLE DIFFÉRENTIAL-PALIER ET COUSSINENT, ARRIÈRE RD-19500☒ ..... A 4 25700
ENSEMBLE DIFFÉRENTIAL-PALIER ET COUSSINENT, ARRIÈRE RD-19640 ..... A 4 25900
ENSEMBLE EMBRAYAGE, MARCH AV & AR & BASSE ..... A 3 11000
ENSEMBLE EMBRAYAGE, TREUIL ..... A 6 17000
ENSEMBLE ESSIEU ARRIÈRE ..... A 4 20610
..... A 4 20700
..... A 4 21000
..... A 4 21200
ENSEMBLE ESSIEU AVANT ..... A 4 10000
..... A 4 10600
..... A 4 10700
..... A 4 11000
ENSEMBLE FILTRE RÉSERVOIR HYDRAULIQUE ..... A 9 16050
ENSEMBLE SOUPAPE DE SURETÉ ..... E 2 50000
ENSEMBLE VÉRIN, GRAPPIN À GRUMES 70 IN - 1778,0 MM ..... E 1 13000
ENSEMBLE VÉRIN, GRAPPIN À GRUMES ..... E 1 13000
ENSEMBLE VÉRIN, GRAPPIN À GRUMES 102 IN - 2590,8 MM ..... E 1 13050
ENSEMBLE VÉRIN, GRAPPIN À GRUMES ..... E 1 13050
EPURATEUR D'AIR ..... A 1 25100
..... A 1 25200
ESSIEU AR ENSEMBLE RD 19500 SERVICE DUR ..... A 4 20700
ESSIEU AR ENSEMBLE RD-17900 ..... A 4 21200
ESSIEU AR ENSEMBLE RD17600 VOIE LARGE ☒ ..... A 4 21000
ESSIEU AR ENSEMBLE RD17800 SERVICE DUR ..... A 4 20610
ESSIEU AV ENSEMBLE - 17900 ..... A 4 10700
ESSIEU AV, ENSEMBLE - FD-17600 ..... A 4 10000
ESSIEU AV, ENSEMBLY - 17600 WT ☒ ..... A 4 11000
ESSIEU AV, ENSEMBLY - 17800 - HD ☒ ..... A 4 10600
ESSIEU, ENSEMBLE DE BERCEAU ..... B 1 15070
EXTINCTEUR À INCENDIE ..... F 2 80000

## F

FILTRE À AIR - SILENCIEUX & MONTAGE ..... A 1 20125
..... A 1 20150
..... A 1 20200
FREIN DE STATIONNEMENT ..... A 7 25000
..... A 7 25000
FREIN PRIMAIRE - DISQUE ..... A 7 10200
FREIN PRIMAIRE - DISQUE ☒ ..... A 7 10100
FREIN PRIMAIRE - DISQUE À COULISSE ..... A 7 10150
FREIN PRIMAIRE - TAMBOUR ..... A 7 10000
FREIN PRIMAIRE - TAMBOUR ☒ ..... A 7 10050
FREIN-BLOC AMORTISSEUR ET FIXATION ..... A 7 40150

## G

GUIDE - CÂBLE ET MONTAGE ..... B 2 10000

## H

HYDRAULIQUE DE CULASSE DE MOTEUR ..... A 10 12000
HYDRAULIQUES-ARC ET GRAPPIN ..... A 10 10030
HYDRAULIQUES-CULLASSE DE MOTEUR ..... A 10 12000

## I

ISOLATION-CHÂSSIS AVANT ..... G 2 10000
ISOLATION-DAIS ..... G 6 10000
ISOLATION-PAROI ANTI-INCENDIE ..... G 3 10000
ISOLATION-PLANCHER ET SIÈGE ..... G 4 10000
ISOLATION-POTD'ÉCHAPPEMENT ☒ ..... G 1 10000
ISOLATION-TABLEAU DE BORD ☒ ..... G 5 10000

## J

JEU D'EXTINCTION D'INCENDIE ..... H 1 10050

## L

LUBRIFICATION DU LIT ..... B 1 16000

## M

MONTAGE DE L'ESSIEU ARRIÈRE ..... B 1 23000
..... B 1 23050
..... B 1 23100
..... B 1 23150
..... B 1 23200
MONTAGE DE TRANSMISSION ..... A 3 15050
..... A 3 15150
MONTAGE ET LUBRIFICATION DU MOTEUR ..... A 1 15150
..... A 1 15200
..... A 1 15250
MOTEUR, FILTRE ..... J 1 50000

## P

PALE & MONTAGE ..... B 3 10010
PALIER INTERMÉDIAIRE, ENSEMBLE ..... A 7 50050
PHARES☒ ..... F 2 90000
..... F 2 90050
..... F 2 90450
..... F 2 90500
PINCE DE FREIN À DISQUE ..... A 7 10150
PINCES ..... F 2 95000
PLANCHER ET SUPPORT DU SIÈGE ..... C 1 10040
..... C 1 10065
PORTE PLANÉTAIRE ENSEMBLE FD 17600 & RD 17600 ..... A 4 30100
PORTE PLANÉTAIRE ENSEMBLE FD & RD 17620 & 17800 ..... A 4 30115
PORTE PLANÉTAIRE ENSEMBLE 17630, 19600, 19640, 19650 & 33600 ..... A 4 30320

## R

RADIATEUR ET CONNEXION ..... A 1 10305
..... A 1 10320
..... A 1 10330
..... A 1 10500
..... A 1 10550
..... A 1 10575
..... A 1 10600
RÉSERVOIR DE CARBURANT & CANALISATION ..... D 1 10040
..... D 1 10090
ROULEAU D'ARC ..... E 1 12000

## S

SIÈGE, ENSEMBLE ..... F 2 40000
SILENCIEUX ..... A 1 20125
..... A 1 20150
..... A 1 20200
SOUPAPE DE COMMANDE DE TRANSMISSION ..... A 3 13050
..... A 3 13050
SOUPAPE DE CONTRÔLE, ARCHE, GRAPPIN & MOTEUR ..... E 2 30650
SOUPAPE DE CONTRÔLE, LAME ET DIRECTION ..... E 2 30100
..... E 2 30200

# TABLE DES MATIÈRES (cont.)

## S


SOUPAPE DE VERROUILLAGE DE GRAPPIN ..... E 2 40000
SOUPAPE RÉGULATRICE ..... A 2 25050
SOUPAPE, COMMANDE DE BOÎTE DE VITESSE..... A 3 13050
SOUPAPE, LAME ET DIRECTION ..... E 2 30100
..... E 2 30200
SOUPAPE, VERROUILLAGE DE GRAPPIN ..... E 2 40000
SUPPORTS ÉLASTIQUE DU MOTEUR GM ..... A 1 15060
SYSTÈME D'ÉCHAPPEMENT ..... A 1 20125
..... A 1 20150
..... A 1 20200
SYSTÈME ELECTRIQUE ..... F 2 51080
..... F 2 51200
..... F 2 51250
SYSTÈME HYDRAULIQUE DE DIRECTION ET DE PALE ..... A 9 10060
SYSTÈME HYDRAULIQUE,
TRANSMISSION & CONVERTISSEUR ..... A 8 10050
..... A 8 10110
..... A 8 10130


## T


TABLEAU DE BORD ..... F 1 20050
..... F 1 20350
TAMBOR DE CONTRÔLE DU FREIN DE SERVICE ..... A 7 15100
..... A 7 15150
..... A 7 15200
TAMBOUR DE CÂBLE ET BANDE DE FREIN DU
TREUIL-GEARMATIC-19 ..... A 6 18000
TRANSMISSION ENSEMBLE - 2420..... A 3 10000
..... A 3 10050
TREUIL-ARBRE D'ENTRAÎNEMENT DU TAMBOUR
DE CÂBLE ET EMBRAYAGE W-300 ..... A 6 22010
TREUIL-ARBRE D'ENTRAÎNEMENT DU TAMBOUR
DE CÂBLE ET EMBRAYAGE W311-1 ..... A 6 23000
TREUIL-EMBRAYAGE D'ENTRÉE, AXE DU PIGNON ET
GROUPE D'ARBRE D'ENGRENAGE DE LA CO W-300 ..... A 6 24050
TREUIL, EMBRAYAGE D'ENTRÉE, AXE DU PIGNON
D'ARBRE D'ENGRENAGE ..... A 6 24150
TREUIL, HYDRAULIQUES ..... A 6 10040
..... A 6 11010
TROUSSE POUR DÉMARRAGE RAPIDE ..... A 1 40000


## U


UNITÉ DE CONTRÔLE PRINCIPAL
DU TREUIL-GEARMATIC ..... A 6 13000
UNITÉ DE CONTRÔLE PRINCIPAL DU
TREUIL-CLARK ..... A 6 14000


## V


VANNE RÉGULATRICE ..... A 2 25050

# INHALTSVERZEICHNIS


## A

ABZIEHBILD ..... F 2 60050
ACHSE VOLLSTÄNDIG, HINTERRADANTRIEB RD17800 HOCHLEISTUNGSAUSFÜHRUNG ..... A 4 20610
ACHSE VOLLSTÄNDIG, HINTERRADANTRIEB RD 19500 HOCHLEISTUNGSAUSFÜHRUNG ..... A 4 20700
ACHSE VOLLSTÄNDIG, HINTERRADANTRIEB RD17600 BREITSPUR ⊠ ..... A 4 21000
ACHSE VOLLSTÄNDIG, HINTERRADANTRIEB RD-17900 ..... A 4 21200
ACHSE VOLLSTÄNDIG, VORDERRADANTRIEB - FD-17600 ..... A 4 10000
ACHSE VOLLSTÄNDIG, VORDERRADANTRIEB - 17800 - HD ⊠ ..... A 4 10600
ACHSE VOLLSTÄNDIG, VORDERRADANTRIEB - 17600 WT ⊠ ..... A 4 11000
ACHSE VOLLSTÄNDIG,VORDERRANDTRIEB - 17900 ..... A 4 10700
ACHSENLAGERUNG, VOLLSTÄNDIG ..... B 1 15070
ACHSGABEL-SCHMIERUNG ..... B 1 16000
ADAPTERGRUPPE DER WINDE-GEARMATIC-19 ..... A 6 21050
ALTERNATOR ..... F 2 50060
..... F 2 50105
ANTRIEBSWELLEN-AGGREGAT GETRIEBE/WINDE ..... A 5 20050
AUSPUFFSYSTEM ..... A 1 20125
..... A 1 20150
..... A 1 20200
AUSPUFFTOPF ..... A 1 20125
..... A 1 20150
..... A 1 20200

## B

BATTERIE & BATTERIEHALTERUNG ..... F 1 10020
..... F 1 10045
..... F 1 10240
..... F 1 10290
BEDIENUNG, GETRIEBE ..... A 3 20050
..... A 3 20100
BEDIENUNG, SHEIBE DER STANDARDBREMSE ..... A 7 15300
..... A 7 15350
..... A 7 15400
..... A 7 15450
BEDIENUNG, TROMMEL DER STANDARDBREMSE ..... A 7 15100
..... A 7 15150
..... A 7 15200
BEDIENUNG, WINDE ..... A 6 10040
..... A 6 11010
BEDIENUNGSELEMENTE, LENKUNG UND SCHILD ..... A 9 20100
..... A 9 20200
BESCHLEUNIGUNGS-FUSSHEBEL UND GESTÄNGE ..... D 1 20080
..... D 1 20100
BODENPLATTE UND SITZSTUTZE ..... C 1 10040
..... C 1 10065
BOGEN & GREIFER, HYDRAULIK ..... A 10 10030
BOGEN UND GREIFER, BEDIENUNG ..... A 10 20150
BOGEN, BAUGRUPPE ..... E 1 12000
BOGENEINHEIT ..... B 5 10045
BRANDWAND-AUFBAU ..... B 4 10050
..... B 4 10065
..... B 4 10070
..... B 4 10130
BREMSE-LAGERBOCK UND MONTAGETEILE ..... A 7 40150
BREMSE, HAND ..... A 7 25000
BREMSZYLINDER-BAUGRUPPE DER WINDE-GEARMATIC-19 ..... A 6 19000
BREMSZYLINDEREINHEIT, WINDE-GEARMATIC ..... A 6 18000
..... A 6 19000

## D

DIENSTBREMSE - SCHEIBE ⊠ ..... A 7 10100
DIENSTBREMSE - SCHEIBE ..... A 7 10200
DIENSTBREMSE - TASTERSCHEIBE ..... A 7 10150
DIENSTBREMSE - TROMMEL ..... A 7 10000
DIENSTBREMSE - TROMMEL ⊠ ..... A 7 10050
DIFFERENTIAL & TRÄGER VOLLSTÄNDIG, VORNE FD-17600 ..... A 4 14950
DIFFERENTIAL & TRÄGER VOLLSTÄNDIG, VORNE - 17600 ..... A 4 15000
DIFFERENTIAL & TRÄGER VOLLSTÄNDIG, VORNE FD-17900 & FD-17800 ..... A 4 15600
..... A 4 15610
DIFFERENTIAL & TRÄGER VOLLSTÄNDIG, HINTEN RD-17600 ..... A 4 21500
DIFFERENTIAL & TRÄGER VOLLSTÄNDIG, HINTEN RD-17800&17900 ..... A 4 25600
DIFFERENTIAL & TRÄGER VOLLSTÄANDIG, HINTEN RD-19500⊠ ..... A 4 25700
DIFFERENTIAL & TRÄGER VOLLSTÄNDIG, HINTEN RD-19640 ..... A 4 25900
DIFFERENTIAL, HINTEN UND TRÄGEREINHEIT ..... A 4 25600
..... A 4 25700
..... A 4 25900
DIFFERENTIAL, VORNE UND TRÄGETEINHEIT ..... A 4 14950
..... A 4 15000
..... A 4 15600
..... A 4 15610
..... A 4 21500
DREHKOPF VOLLSTÄNDIG ..... E 2 70000
DREHMOMENTWANDLER, VOLLSTÄNDIG ..... A 2 10050
..... A 2 10150
..... A 2 10200
DREHSITZ VOLLSTÄNDIG ..... F 2 40050
DROSSELSTEUERUNG ..... D 1 20080
..... D 1 20100

## E

ELEKTRISCHE ANLAGE ..... F 2 51080
..... F 2 51200
..... F 2 51250

## F

FELGENEINHEIT - 16.9 X 30 REIFEN ..... F 2 96700
FELGENEINHEIT - 18.4 X 26 REIFEN ..... F 2 96650
..... F 2 97000
FELGENEINHEIT - 18.4 X 34 REIFEN ..... F 2 96600
..... F 2 96980
FELGENEINHEIT - 18.4 X 38 REIFEN ..... F 2 96550
FELGENEINHEIT - 23.1 X 26 REIFEN ..... F 2 96500
..... F 2 96900
FELGENEINHEIT - 24.5 X 32 REIFEN ..... F 2 96470
..... F 2 96880
FELGENEINHEIT - 28.1 X 26 REIFEN ..... F 2 96400
..... F 2 96800
FELGENEINHEIT - 30.5 X 32 REIFEN ..... F 2 96370
..... F 2 96750
FEUERLÖSCHER ..... F 2 80000
FEURERSICHERHEITSSATZ ..... H 1 10050
FILTER, MOTOR- ..... J 1 50000
FÜHRUNGSROLLE UND MONTAGE ..... B 2 10000

## G

GEHÄUSSEINHEIT, WINDE ..... A 6 16000
GELENKWELLE VOLLSTÄNDIG, GETRIEBE/DREHMOMENTWANDLER ..... A 5 10050
..... A 5 10210
GELENKWELLE VOLLSTÄNDIG, GETRIEBE/MITTELLAGER ..... A 5 50050
GELENKWELLE VOLLSTÄNDIG, GETRIEBE/LAGERBOCK ..... A 5 60025

# INHALTSVERZEICHNIS (forts)


## G

GETRIEBE KUPPLUNGSBAUGRUPPE - VORWÄRTS, RÜCKWARTS & ERSTE ..... A 3 11000
GETRIEBE VOLLSTÄNDIG - 2420 ..... A 3 10000
..... A 3 10050
GETRIEBE- & DREHMOMENTWANDLERHYDRAULIK ..... A 8 10050
..... A 8 10110
..... A 8 10130
GETRIEBE-MONTAGE ..... A 3 15050
..... A 3 15150
GETRIEBEKUPPLUNGSGRUPPE, SCHNELL ..... A 3 12000
GETRIEBEREGELVENTIL ..... A 3 13050
..... A 3 13050
GETRIEBESCHALTHEBEL ..... A 3 20050
..... A 3 20100
GREIFER-BAUGRUPPE 102 IN - 2,59 M ..... B 6 10020
GREIFER-BAUGRUPPE 70 IN -1778,0 MM ..... B 6 10000
GREIFERDREHKOPF VOLLSTÄNDIG ..... E 2 70000

## H

HAUPSTEUEREINHEIT DER WINDE-GEARMATIC ..... A 6 13000
HAUPSTEUEREINHEIT DER WINDE-CLARK ..... A 6 14000
HILFSLENKUNG ☒ ..... A 9 14000
HINTERACHSEN-MONTAGE ..... B 1 23050
..... B 1 23100
..... B 1 23150
..... B 1 23200
HINTERACHSEN, MONTAGE ..... B 1 23000
HINTERACHSENEINHEIT ..... A 4 20610
..... A 4 20700
..... A 4 21000
..... A 4 21200
HINTERRAHMEN UND MONTIERUNG ..... B 1 20050
..... B 1 20175
HOLZGREIFERZYLINDER, VOLLSTÄNDIG 70 IN - 1778,0 MM ... E 1 13000
HOLZGREIFERZYLINDER, VOLLSTÄNDIG ..... E 1 13000
HOLZGREIFERZYLINDER, VOLLSTÄNDIG 102 IN - 2590,8 MM .. E 1 13050
HOLZGREIFERZYLINDER, VOLLSTÄNDIG ..... E 1 13050
HYDRAULIK-BOGEN UND GREIFER ..... A 10 10030
HYDRAULIK-MOTORENKOPF ..... A 10 12000
HYDRAULIK, STEUER & KLINGE ..... A 9 10060
HYDRAULIK, WINDE ..... A 6 10040
..... A 6 11010
HYDRAULIKANLAGE GETRIEBE & DREHMOMENTWANDLER .. A 8 10050
..... A 8 10110
..... A 8 10130
HYDRAULIKTANKEINHEIT ..... A 9 16050

## I

INSTRUMENTENBRETT ..... F 1 20050
..... F 1 20350
ISOLIERUNG-BODEN UND SITZ ..... G 4 10000
ISOLIERUNG-INSTRUMENTENBRETT ☒ ..... G 5 10000
ISOLIERUNG-KLAPPVERDECK ..... G 6 10000
ISOLIERUNG-SCHALLDÄMPFER ☒ ..... G 1 10000
ISOLIERUNG-STIRNWAND-BRANDSCHOTT ..... G 3 10000
ISOLIERUNG-VORDERRAHMEN ..... G 2 10000

## K

KARDANWELLE, VOLLSTÄNDIG, HINTERACHSEN ..... A 5 40150
KARDANWELLE, VOLLSTÄNDIG, HINTERACHSEN☒ ..... A 5 40250
KARDANWELLE, VOLLSTÄNDIG, HINTERACHSEN ..... A 5 40475
..... A 5 40500
KLAMMERN ..... F 2 95000
KNOPF ..... F 2 95050
KONTROLLSCHEIBE DER STANDBREMSE ..... A 7 15300
KONTROLLSCHEIBE DER STANDBREMSE ☒ ..... A 7 15350
KONTROLLSCHEIBE DER STANDBREMSE ..... A 7 15400
KONTROLLSCHEIBE DER STANDBREMSE ☒ ..... A 7 15450
KONTROLLTROMMEL DER STANDARBREMSE ..... A 7 15100
..... A 7 15150
..... A 7 15200
KRAFTSTOFFTANK & LEITUNGEN ..... D 1 10040
..... D 1 10090
KÜHLER UND VERBINDUNGEN ..... A 1 10305
..... A 1 10320
..... A 1 10330
..... A 1 10500
..... A 1 10550
..... A 1 10575
..... A 1 10600
KUPPLUNG, VOLLSTÄNDIG, HOCH ..... A 3 12000
KUPPLUNG, VORWÄRTS, RÜCKWARTS & ERSTE ..... A 3 11000
KUPPLUNGSEINHEIT, WINDE ..... A 6 17000

## L

LENK UND BLATTSTEUERUNG ..... A 9 20100
..... A 9 20200
LENK- UND SCHILDHYDRAULIK ..... A 9 10060
LUFTFILTER ..... A 1 25100
..... A 1 25200
LUFTFILTER - AUSPUFFÄMPFER UND MONTAGE ..... A 1 20125
..... A 1 20150
..... A 1 20200
LUFTKOMPRESSOR ☒ ..... F 2 92000

## M

MITTELLAGER VOLLSTÄNDIG ..... A 7 50050
MOTORAUFBAU UND SCHMIERUNG ..... A 1 15150
..... A 1 15200
..... A 1 15250
MOTORBEFESTIGUNGEN GM ..... A 1 15060
MOTORKOPFHYDRAULIK ..... A 10 12000

## P

PLANENTRÄGER VOLLST FD & RD 17620 & 17800 ..... A 4 30115
PLANENTRÄGER VOLLST FD 17600 & RD 17600 ..... A 4 30100
PLANENTRÄGER VOLLST 17630, 19600, 19640, 19650 & 33600 ... A 4 30320
PROPELLER WELLENAGGREGAT, ÜBERSETZUNG-VORDERACHSE ..... A 5 30100
PUMPEN UND MOTOREN-BAUGRUPPE ☒ ..... E 2 20000

## R

RAHMEN, HINTEN ..... B 1 20050
..... B 1 20175
RAHMEN, VORDER & HINTER ..... B 1 10045
..... B 1 10070
REGELVENTIL ..... A 2 25050
RING- UND RITZELEINHEIT, WINDE-GEARMATIC ..... A 6 20000
RÜCKSCHLAGVENTIL VOLLST ..... E 2 50000

## S

SCHAUFEL UND SCHAUFELMONTAGE ..... B 3 10010
SCHEIBENBREMSE ..... A 7 10150
SCHEINWERFER LEUCHTEN☒ ..... F 2 90450
..... F 2 90500
SCHEINWERFER-LEUCHTEN☒ ..... F 2 90000
..... F 2 90050
SCHNELL-STARTHILFESATZ ..... A 1 40000
SCHUTZDACH ..... F 2 10040
..... F 2 10100

# INHALTSVERZEICHNIS (forts)

## S


SEILTROMMEL DER WINDE UND BREMSBÄNDER-GEARMATIC-19 ..... A 6 18000
SEKUNDÄRBREMSBEDIENUNG ☒ ..... A 7 30100
SITZ VOLLSTÄNDIG ..... F 2 40000
STANDBREMSE ..... A 7 25000
STEUERUNGEN-BOGEN UND GREIFER ..... A 10 20150
STEUERVENTIL, BOGEN, GREIFER & MOTOR ..... E 2 30650
STEUERVENTIL, STEUER UND KLINGE ..... E 2 30100
..... E 2 30200


## V


VENTIL - GREIFERSCHLOSS ..... E 2 40000
VENTIL, GETRIEBESTEUER- ..... A 3 13050
VENTIL, GREIFERSCHLOSS ..... E 2 40000
VENTIL, REGLER- ..... A 2 25050
VENTIL, STEUER UND KLINGE ..... E 2 30100
..... E 2 30200
VORDERACHENEINHEIT ..... A 4 10000
..... A 4 10600
..... A 4 10700
..... A 4 11000


## W


WINDE-ANTRIEBSWELLE DER SEILTROMMEL UND KUPPLUNG W-300 ..... A 6 22010
WINDE-ANTRIEBSWELLE DER SEILTROMMEL UND KUPPLUNG W311-1 ..... A 6 23000
WINDE-EINGANGSKUPPLUNG, RITZELWELLE UND ZAHNKRANZWELLE W-300 ..... A 6 24050
WINDE-EINGANGSKUPPLUNG, RITZELWELLE UND ZAHNKRANZWELLE W-311-1 ..... A 6 24150
WINDN- UND HYDRAULIKBEDIENUNG ..... A 6 10040
WINDEN- UND HYDRAULIKBEDIENUNG-CLARK ..... A 6 11010
WINDENGELHÄUSE-BAUGRUPPE-GEARMATIC 19 ..... A 6 16000
WINDENKUPPLUNGSBAUGRUPPE-GEARMATIC-19 ..... A 6 17000


## Z


ZAHNDRANZ UND RITZEL DER WINDE-GEARMATIC-19 ..... A 6 20000
ZYLINDERBAU, BOGEN ..... E 1 12000
ZYLINDEREINHEIT, STEUER & KLINGE ..... E 1 10010
..... E 1 10010
..... E 1 10020
..... E 1 10020
..... E 1 10040
..... E 1 10040

# INDICE ALFABÉTICO

## A


ACELERADOR E ARTICULAÇÃO ..... D 1 20080
..... D 1 20100
ALTERNADOR ..... F 2 50060
..... F 2 50105
AMORTECEDOR DO FILTRO DE AR E SUPORTE ..... A 1 20125
..... A 1 20150
..... A 1 20200
ARCO E GARRA HIDRÁULICOS ..... A 10 10030
ARMAÇÃO TRASEIRA E SUPORTE ..... B 1 20050
..... B 1 20175
ASSENTO, CONJUNTO ..... F 2 40000


## B


BATERIA & MONTAGEM DA BATERIA ..... F 1 10020
..... F 1 10045
..... F 1 10240
..... F 1 10290
BOTÃO ..... F 2 95050


## C


CABEÇA DO MOTOR HIDRAULICO ..... A 10 12000
CHASSI DIANTEIRO & TRASEIRO ..... B 1 10045
..... B 1 10070
CHASSI TRASEIRO ..... B 1 20050
..... B 1 20175
COMANDOS DA DIREÇAO E LÂMINA ..... A 9 20100
..... A 9 20200
COMPRESSOR DE AR ☒ ..... F 2 92000
CONJUNTO CARAÇA DO GUINCHO-GEARMATIC 19 ..... A 6 16000
CONJUNTO CILINDRO DE FREIO DO GUINCHO-GEARMATIC-19 ..... A 6 19000
CONJUNTO CORÔA E PINHÃO DO GUINCHO-GEARMATIC-19 ..... A 6 20000
CONJUNTO DA CARCAÇA, GUINCHO ..... A 6 16000
CONJUNTO DA EMBREAGEM, MARCHA À FRENTE & À RÉ & BAIXZ ..... A 3 11000
CONJUNTO DE ADAPTADOR DO GUINCHO-GEARMATIC-19 .. A 6 21050
CONJUNTO DE ARCO ..... E 1 12000
CONJUNTO DE AROS - 16.9 X 30 PNEUMÁTICO ..... F 2 96700
CONJUNTO DE AROS - 18.4 X 38 PNEUMÁTICO ..... F 2 96550
CONJUNTO DE AROS - 18.4 X 34 PNEUMÁTICO ..... F 2 96600
CONJUNTO DE AROS - 18.4 X 26 PNEUMÁTICO ..... F 2 96650
CONJUNTO DE AROS - 18.4 X 34 PNEUMÁTICO ..... F 2 96980
CONJUNTO DE AROS - 18.4 X 26 PNEUMÁTICO ..... F 2 97000
CONJUNTO DE AROS - 23.1 X 26 PNEUMÁTICO ..... F 2 96500
..... F 2 96900
CONJUNTO DE AROS - 24.5 X 32 PNEUMÁTICO ..... F 2 96470
..... F 2 96880
CONJUNTO DE AROS - 28.1 X 26 PNEUMÁTICO ..... F 2 96400
..... F 2 96800
CONJUNTO DE AROS - 30.5 X 32 PNEUMÁTICO ..... F 2 96370
..... F 2 96750
CONJUNTO DE ASSENTO ROTATIVO ..... F 2 40050
CONJUNTO DE BOMBA E MOTOR ☒ ..... E 2 20000
CONJUNTO DE CABEÇC ROTATIVA ..... E 2 70000
CONJUNTO DE CILINDRO DE FREIO, GUINCHO-GEARMATIC ..... A 6 18000
..... A 6 19000
CONJUNTO DE CILINDRO, DIREÇÃO E LÀMINA ..... E 1 10010
..... E 1 10010
..... E 1 10020
..... E 1 10020
..... E 1 10040
..... E 1 10040
CONJUNTO DE EIXO PROPULSOR, EIXOS TRASEIORS ..... A 5 40150
CONJUNTO DE EIXO PROPULSOR, EIXOS TRASEIORS☒ ..... A 5 40250
CONJUNTO DE EIXO PROPULSOR, EIXOS TRASEIROS ..... A 5 40475
CONJUNTO DE EIXO PROPULSOR, EIXOS TRASEIORS ..... A 5 40500
CONJUNTO DE EMBREAGEM, GUINCHO ..... A 6 17000
CONJUNTO DE GARRA 102 IN - 2,59 M ..... B 6 10020
CONJUNTO DE GARRA 70 IN -1778,0 MM ..... B 6 10000
CONJUNTO DE GARRAS DE CABEÇA ROTATIVA ..... E 2 70000
CONJUNTO DO ANEL E PINHAO, GUINCHO-GEARMATIC ..... A 6 20000
CONJUNTO DO ARCO ..... B 5 10045
CONJUNTO DO CILINDRO DAS GARRAS 70 IN - 1778,0 MM ... E 1 13000
CONJUNTO DO CILINDRO DAS GARRAS ..... E 1 13000
CONJUNTO DO CILINDRO DAS GARRAS 102 IN - 2590,8 MM ... E 1 13050
CONJUNTO DO CILINDRO DAS GARRAS ..... E 1 13050
CONJUNTO DO CILINDRO, ARCO ..... E 1 12000
CONJUNTO DO DIFERENCIAL & SUPORTE, DIANTEIRO FD-17600 ..... A 4 14950
CONJUNTO DO DIFERENCIAL & SUPORTE, DIANTEIRO - 17600 ..... A 4 15000
CONJUNTO DO DIFERENCIAL & SUPORTE, DIANTEIRO FD-17900 & FD-17800 ..... A 4 15600
..... A 4 15610
CONJUNTO DO DIFERENCIAL & SUPORTE, TRASEIRA RD-17800&17900 ..... A 4 25600
CONJUNTO DO DIFERENCIAL & SUPORTE, TRASEIRA RD-19500☒ ..... A 4 25700
CONJUNTO DO DIFERENCIAL & SUPORTE, TRASEIRA RD-19640 ..... A 4 25900
CONJUNTO DO DIFFERENCIAL & SUPORTE, TRASEIRA RD-17600 ..... A 4 21500
CONJUNTO DO EIXO DIANTEIRO ..... A 4 10000
..... A 4 10600
..... A 4 10700
..... A 4 11000
CONJUNTO DO EIXO TRASEIRO ..... A 4 20610
..... A 4 20700
..... A 4 21000
..... A 4 21200
CONJUNTO DO PÁRA-FOGO ..... B 4 10050
..... B 4 10065
..... B 4 10070
..... B 4 10130
CONJUNTO DO TANQUE HIDRÁULICO ..... A 9 16050
CONJUNTO EIXO DE PROPULSÃO-TRANSMISSÃO/GUINCHO ..... A 5 20050
CONJUNTO EMBREAGEM DA TRANSMISSÃO - MARCHA À FRENTE & ÀR É & BAIXA ..... A 3 11000
CONJUNTO EMBREAGEM DO GUINCHO-GEARMATIC-19 ..... A 6 17000
CONJUNTO HÉLICE EIXO, TRANSMISSÃO-EIXO FRENTE ..... A 5 30100
CONJUNTO VÁLVULA DE ESBARRO ..... E 2 50000
CONTROLE E HIDRÁULICO DO GUINCHO-CLARK ..... A 6 11010
CONTROLE E HIDRÁULICO DO GUINCHO ..... A 6 10040
CONTROLES DA TRANSMISSÃO ..... A 3 20100
..... A 3 20050
CONTRÔLES DE DIREÇÃO E LÂMINA ..... A 9 20100
..... A 9 20200
CONTROLES DO ARCO E GARRAS ..... A 10 20150
CONTROLES DO ESTRANGULADOR ..... D 1 20080
..... D 1 20100
CONTROLES DO FREIO SECUNDÁRIO ☒ ..... A 7 30100
CONTRÔLES-ARCO E GARRA ..... A 10 20150
CONTROLES, GUINCHO ..... A 6 10040
..... A 6 11010
CONTROLES, SERVIÇO DO DISCO DE FREIO ..... A 7 15300
..... A 7 15350
..... A 7 15400
..... A 7 15450
CONTROLES, SERVIÇO DO TAMBOR DE FREIO ..... A 7 15100
..... A 7 15150
..... A 7 15200
CONTROLES, TRANSMISSÃO ..... A 3 20050
..... A 3 20100

# INDICE ALFABÉTICO (cont.)


## C

CONVERSOR, CONJUNTO ..... A 2 10050
..... A 2 10150
..... A 2 10200

## D

DECALCOMANIAS ..... F 2 60050
DIFERENCIAL DIANTEIRO E CONJUNTO SUPORTE ..... A 4 14950
..... A 4 15000
..... A 4 15600
..... A 4 15610
..... A 4 21500
DIFERENCIAL TRASEIRO E CONJUNTO SUPORTE ..... A 4 25600
..... A 4 25700
..... A 4 25900
DIREÇÃO AUXILIAR ⊠ ..... A 9 14000
DISCO DE CONTROLE DE FREIO DE SERVIÇIO ..... A 7 15300
DISCO DE CONTROLE DE FREIO DE SERVIÇIO ⊠ ..... A 7 15350
DISCO DE CONTROLE DE FREIO DE SERVIÇIO ..... A 7 15400
DISCO DE CONTROLE DE FREIO DE SERVIÇIO ⊠ ..... A 7 15450
DOSSEL ..... F 2 10040
..... F 2 10100

## E

EIXO DIANTEIRO, CONJUNTO - FD-17600 ..... A 4 10000
EIXO DIANTEIRO, CONJUNTO - 17800 - HD ⊠ ..... A 4 10600
EIXO DIANTEIRO, CONJUNTO - 17900 ..... A 4 10700
EIXO DIANTEIRO, CONJUNTO - 17600 WT ⊠ ..... A 4 11000
EIXO PROPULSOR, TRANSMISSÃO/CONVERTIDOR, CONJUNTO ..... A 5 10050
..... A 5 10210
EIXO PROPULSOR, TRANSMISSÃO/MANCAL CENTRAL CONJUNTO ..... A 5 50050
EIXO PROPULSOR, TRANSMISSÃO/CHUMACEIRA ..... A 5 60025
EIXO TRASEIRO, CONJUNTO RD17800 SERVIÇO PESADO ..... A 4 20610
EIXO TRASEIRO, CONJUNTO RD 19500 SERVIÇO PESADO ..... A 4 20700
EIXO TRASEIRO, CONJUNTO RD17600 BITOLA LARGA ⊠ ..... A 4 21000
EIXO TRASEIRO, CONJUNTO RD-17900 ..... A 4 21200
EIXO, CONJUNTO DO BÊRÇO ..... B 1 15070
EMBREAGEM,CONJUNTO, ALTA ..... A 3 12000
EXTINTOR DE INCÊNDIO ..... F 2 80000

## F

FILTRO DE AR ..... A 1 25100
..... A 1 25200
FREIO DE DISCO DE CALIBRE ..... A 7 10150
FREIO DE ESTACIONAMENTO ..... A 7 25000
FREIO MANUTENÇÃO - CALIBRADOR DISCO ..... A 7 10150
FREIO MANUTENÇÃO - DISCO ⊠ ..... A 7 10100
FREIO MANUTENÇÃO - DISCO ..... A 7 10200
FREIO MANUTENÇÃO - TAMBOR ..... A 7 10000
FREIO MANUTENÇÃO - TAMBOR ⊠ ..... A 7 10050
FREIO-COXIM DE MANCAL E SUPORTE ..... A 7 40150
FREIO, ESTACIONAMENTO ..... A 7 25000

## G

GRAMPOS ..... F 2 95000
GRUPO DE EMBREAGEM DA TRANSMISSÃO, ALTA ..... A 3 12000
GUICHO-EMBREAGEM DEENTRADA, EIXO DE PINHÃO E EIXO DE ENGRENAGE W-311-1 ..... A 6 24150
GUINCHO -GRUPO DE EMBREAGEM DE ENTRADA, EIXO DE PINHÃO E GRUPO DE EIXO DE ENGR W-300 ..... A 6 24050
GUINCHO-EIXO IMPULSOR DO TAMBOR DE CABOS E EMBREAGEM W-300 ..... A 6 22010
GUINCHO-EIXO IMPULSOR DO TAMBOR DE CABOS E EMBREAGEM W311-1 ..... A 6 23000

## H

HIDRÁULICA-ARCO E GARRA ..... A 10 10030
HIDRAULICA-CABEÇA DO MOTOR ..... A 10 12000
HIDRÁULICO, GUINCHO ..... A 6 10040
..... A 6 11010
HIDRÁULICOS, DIREÇÃO E LÂMINA ..... A 9 10060

## I

INSULAÇÃO-DOSEL ..... G 6 10000
INSULAÇÃO-PAREDE GUARDAFOGO ..... G 3 10000
INSULAÇÃO-SILENCIADOR ⊠ ..... G 1 10000
INSULAÇÃO-TAPETE DO PISO E ASSENTO ..... G 4 10000
ISOLAÇÃO-CHASSI DIANTEIRO ..... G 2 10000
ISOLAMENTO-PAINEL DE INSTRUMENTOS ⊠ ..... G 5 10000

## J

JOGO DE AULÍLIO PARA PARTIDA RÁPIDA ..... A 1 40000
JÔGO EXTINTOR DE INCÊNDIO ..... H 1 10050

## L

LÂMINA E SUPORTE ..... B 3 10010
LUBRIFICAÇÃO DO BERÇO ..... B 1 16000
LUZES⊠ ..... F 2 90000
..... F 2 90050
..... F 2 90450
..... F 2 90500

## M

MANCAL CENTRAL, CONJUNTO ..... A 7 50050
MONTAGEM E LUBRICAÇÃO DO MOTOR ..... A 1 15250
..... A 1 15150
..... A 1 15200
MOTOR, FILTROS DO ..... J 1 50000

## P

PAINEL DE INSTRUMENTOS ..... F 1 20050
..... F 1 20350

## R

RADIADOR E CONEXÕES ..... A 1 10305
..... A 1 10320
..... A 1 10330
..... A 1 10500
..... A 1 10550
..... A 1 10575
..... A 1 10600
RODA - GUIA E MONTAGEM ..... B 2 10000

## S

SILENCIADOR ..... A 1 20125
..... A 1 20150
..... A 1 20200
SISTEMA DE ESCAPE ..... A 1 20125
..... A 1 20150
..... A 1 20200
SISTEMA ELECTRICO ..... F 2 51080
..... F 2 51200
..... F 2 51250
SISTEMA HIDRÁULICO DA DIREÇÃO E DA LÂMINA ..... A 9 10060
SISTEMA HIDRÁULICO, TRANSMISSÃO & CONVERSOR DE TORQUE ..... A 8 10050
..... A 8 10110
..... A 8 10130

# INDICE ALFABÉTICO (cont.)

## S


SUPORTE ASSOALHO E ASSENTO ..... C 1 10040
..... C 1 10065
SUPORTE DA TRANSMISSÃO ..... A 3 15050
..... A 3 15150
SUPORTE DO EIXO TRASEIRO ..... B 1 23000
..... B 1 23050
..... B 1 23100
..... B 1 23150
..... B 1 23200
SUPORTE PLANET CONJUNTO FD 17600 & RD 17600 ..... A 4 30100
SUPORTE PLANET CONJUNTO FD & RD 17620 & 17800 ..... A 4 30115
SUPORTE PLANET CONJUNTO 17630,
19600, 19640, 19650 & 33600 ..... A 4 30320
SUPORTES DE MONTAGEM DO MOTOR GM ..... A 1 15060


## T


TAMBOR DE CABOS E CINTA DE FREIO DO
GUINCHO-GEARMATIC-19 ..... A 6 18000
TAMBOR DE CONTROLES DE FREIO DE SERVIÇIO ..... A 7 15100
..... A 7 15150
..... A 7 15200
TANQUE DE COMBUSTÍVEL & TUBULAÇÕES ..... D 1 10040
..... D 1 10090
TRANSMISSÃO E CONVERTEDORES HIDRÁULICOS ..... A 8 10050
..... A 8 10110
..... A 8 10130
TRANSMISSÃO, CONJUNTO - 2420 ..... A 3 10000
..... A 3 10050


## U


UNIDADE DE CONTRÔLE MESTRE
DO GUINCHO-GEARMATIC ..... A 6 13000
UNIDADE DE CONTRÔLE MESTRE DO GUINCHO-CLARK ..... A 6 14000


## V


VÁLVULA, REGULADOR ..... A 2 25050
VÁLVULA DE CONTRÔLE, ARCO, GARRA & MOTOR ..... E 2 30650
VÁLVULA DE CONTRÔLE, TRANSMISSÃO ..... A 3 13050
..... A 3 13050
VÁLVULA DE GARRA DE FECHADURA ..... E 2 40000
VÁLVULA DO REGULADOR ..... A 2 25050
VÁLVULA, CONTRÔLE DE TRANSMISSÃO ..... A 3 13050
VÁLVULA, DIRÇÃO E LÂMINA ..... E 2 30100
..... E 2 30100
..... E 2 30200
..... E 2 30200
VÁLVULA, GARRA DA FECHADURA ..... E 2 40000

# INDICE ALFABÉTICO

## A


ACELERADOR & CONEXIÓN ..... D 1 20080
..... D 1 20100
AISLACIÓN-PANEL DE INSTRUMENTOS ☒ ..... G 5 10000
AISLAMIENTO-DOSEL ..... G 6 10000
AISLAMIENTO-PARED CONTRA FUEGO ..... G 3 10000
AISLAMIENTO-PISO Y ASIENTO ..... G 4 10000
AISLAMIENTO-SILENCIADOR ☒ ..... G 1 10000
AISLAMIENTTO-BASTIDOR DELANTERO ..... G 2 10000
ALTERNADOR ..... F 2 50060
..... F 2 50105
ARBOL PROPULSOR, TRANSMISSIÓN/
CONVERTIDOR, CONJUNTO ..... A 5 10050
..... A 5 10210
ARBOL PROPULSOR, TRANSMISSIÓN/
COJINETE CENTRAL CONJUNTO ..... A 5 50050
ARBOL PROPULSOR, TRANSMISSIÓN/DESCANSO ..... A 5 60025
ARCO Y AGARRE, CONTROLES ..... A 10 20150
ARCO Y AGARRE, HIDRAULICOS ..... A 10 10030
ARMAZON TRASERA Y SOPORTE ..... B 1 20050
..... B 1 20175
ASIENTO, CONJUNTO ..... F 2 40000


## B


BASTIDOR DELANTERO & TRASERO ..... B 1 10045
..... B 1 10070
BASTIDOR TRASERO ..... B 1 20050
..... B 1 20175
BATERÍA & MONTAJE DE BATERÍA ..... F 1 10020
..... F 1 10045
..... F 1 10240
..... F 1 10290
BOTÓN ..... F 2 95050


## C


CALCOMANÍAS ..... F 2 60050
COJINETE CENTRAL, CONJUNTO ..... A 7 50050
COMPRESOR DE AIRE ☒ ..... F 2 92000
CONJUNTO ADAPTADOR DEL GUINCHE-GEARMATIC-19 ..... A 6 21050
CONJUNTO DE ANILLO Y PINÑON, GUINCHE-GEARMATIC ..... A 6 20000
CONJUNTO DE ARCO ..... E 1 12000
CONJUNTO DE ASIENTO ROTATORIO ..... F 2 40050
CONJUNTO DE BOMBA Y MOTOR ☒ ..... E 2 20000
CONJUNTO DE CABEZA ROTATORIA DE AGARRE ..... E 2 70000
CONJUNTO DE CABEZA ROTATORIA ..... E 2 70000
CONJUNTO DE CARCASA, GUINCHE ..... A 6 16000
CONJUNTO DE CILINDRO DE FRENO,
GUINCHE-GEARMATIC ..... A 6 18000
..... A 6 19000
CONJUNTO DE CILINDRO DE LA GARRA PARA
TRONCOS 70 IN - 1778,0 MM ..... E 1 13000
CONJUNTO DE CILINDRO DE LA GARRA PARA TRONCOS ..... E 1 13000
CONJUNTO DE CILINDRO DE LA GARRA PARA
TRONCOS 102 IN - 2590,8 MM ..... E 1 13050
CONJUNTO DE CILINDRO DE LA GARRA PARA TRONCOS ..... E 1 13050
CONJUNTO DE CILINDRO DIRECCION Y CUCHILLA ..... E 1 10010
..... E 1 10020
..... E 1 10040
CONJUNTO DE CILINDRO, ARCO ..... E 1 12000
CONJUNTO DE CILINDRO, DIRECCION Y CUCHILLA ..... E 1 10010
..... E 1 10020
..... E 1 10040
CONJUNTO DE DIFERENCIAL & SOPORTE,
DELANTERO FD-17600 ..... A 4 14950
CONJUNTO DE DIFERENCIAL & SOPORTE,
DELANTERO - 17600 ..... A 4 15000
CONJUNTO DE DIFERENCIAL & SOPORTE,
DELANTERO FD-17900 & FD-17800 ..... A 4 15600
..... A 4 15610
CONJUNTO DE DIFERENCIAL & SOPORTE,
TRASERO RD-17600 ..... A 4 21500
CONJUNTO DE DIFERENCIAL & SOPORTE,
TRASERO RD-17800&17900 ..... A 4 25600
CONJUNTO DE DIFERENCIAL & SOPORTE,
TRASERO RD-19500☒ ..... A 4 25700
CONJUNTO DE DIFERENCIAL & SOPORTE,
TRASERO RD-19640 ..... A 4 25900
CONJUNTO DE EJE DELANTERO ..... A 4 10000
..... A 4 10600
..... A 4 10700
..... A 4 11000
CONJUNTO DE EJE TRASERO ..... A 4 20610
..... A 4 20700
..... A 4 21000
..... A 4 21200
CONJUNTO DE EMBRAGUE, GUINCHE ..... A 6 17000
CONJUNTO DE GARRA 102 IN - 2,59 M ..... B 6 10020
CONJUNTO DE GARRA 70 IN -1778,0 MM ..... B 6 10000
CONJUNTO DEL CONTRAFUEGOS ..... B 4 10050
..... B 4 10065
..... B 4 10070
..... B 4 10130
CONJUNTO DEL EJE CARDAN, TRANSMISIÓN-EJE
DELANTERO ..... A 5 30100
CONJUNTO DEL EJE PROPULSOR, EJES TRASEROS ..... A 5 40150
CONJUNTO DEL EJE PROPULSOR, EJES TRASEROS☒ ..... A 5 40250
CONJUNTO DEL EJE PROPULSOR, EJES TRASEROS ..... A 5 40475
..... A 5 40500
CONJUNTO DEL EMBRAGUE, MARCHA ADELANTE,
RETROCESO & BAJA ..... A 3 11000
CONJUNTO DO ARCO ..... B 5 10045
CONJUNTO EJE PROPULSOR-TRANSMISIÓN/GUINCHE ..... A 5 20050
CONJUNTO EMBRAGUE DEL GUINCHE-GEARMATIC-19 ..... A 6 17000
CONJUNTO ENVOLTURA DEL GUINCHE-GEARMATIC 19 ..... A 6 16000
CONJUNTO ILANTA - 16.9 X 30 NEUMÁTICO ..... F 2 96700
CONJUNTO ILANTA - 18.4 X 38 NEUMÁTICO ..... F 2 96550
CONJUNTO ILANTA - 18.4 X 34 NEUMÁTICO ..... F 2 96600
CONJUNTO ILANTA - 18.4 X 26 NEUMÁTICO ..... F 2 96650
CONJUNTO ILANTA - 18.4 X 34 NEUMÁTICO ..... F 2 96980
CONJUNTO ILANTA - 18.4 X 26 NEUMÁTICO ..... F 2 97000
CONJUNTO ILANTA - 23.1 X 26 NEUMÁTICO ..... F 2 96500
..... F 2 96900
CONJUNTO ILANTA - 24.5 X 32 NEUMÁTICO ..... F 2 96470
..... F 2 96880
CONJUNTO ILANTA - 28.1 X 26 NEUMÁTICO ..... F 2 96400
..... F 2 96800
CONJUNTO ILANTA - 30.5 X 32 NEUMÁTICO ..... F 2 96370
..... F 2 96750
CONJUNTO TRANSMISIÓN-EMBRAGUE
- MARCHA ADELANTE, RETROCESO & BAJA ..... A 3 11000
CONJUNTO VÁLVULA RETENCIÓN ..... E 2 50000
CONTROLES DE LA TRANSMISIÓN ..... A 3 20050
..... A 3 20100
CONTROLES DEL FRENO SECUNDARIO ☒ ..... A 7 30100
CONTROLES DEL REGULADOR ..... D 1 20080
..... D 1 20100
CONTROLES E HIDÁULICA DEL GUINCHE-CLARK ..... A 6 11010
CONTROLES E HIDÁULICA DEL GUINCHE ..... A 6 10040
CONTROLES, DISCO DE FRENO DE SERVICIO ..... A 7 15300
..... A 7 15350
..... A 7 15400
..... A 7 15450
CONTROLES, GUINCHE ..... A 6 10040
..... A 6 11010
CONTROLES, TAMBOR DE FRENO DE SERVICIO ..... A 7 15100
..... A 7 15150
..... A 7 15200

# INDICE ALFABÉTICO (cont.)


## C

CONTROLES, TRANSMISION ..... A 3 20050
..... A 3 20100
CONTROLS, DIRECCIÓN Y CUCHILLAS ..... A 9 20100
..... A 9 20200
CONVERTIDOR, CONJUNTO ..... A 2 10050
..... A 2 10150
..... A 2 10200

## D

DEPÓSITO & LÍNEAS DE COMBUSTIBLE ..... D 1 10040
..... D 1 10090
DIFERENCIAL DELANTERO Y CONJUNTO DE CARCASA ..... A 4 14950
..... A 4 15000
..... A 4 15600
..... A 4 15610
..... A 4 21500
DIFERENCIAL POSTERIOR Y CONJUNTO DE CARCASA ..... A 4 25600
..... A 4 25700
..... A 4 25900
DIRECCION AUXILIAR ☒ ..... A 9 14000
DISCO DE CONTROL DEL FRENO DE SERVICIO ..... A 7 15300
DISCO DE CONTROL DEL FRENO DE SERVICIO ☒ ..... A 7 15350
DISCO DE CONTROL DEL FRENO DE SERVICIO ..... A 7 15400
DISCO DE CONTROL DEL FRENO DE SERVICIO ☒ ..... A 7 15450
DOSEL ..... F 2 10040
..... F 2 10100

## E

EJE DELANTERO, CONJUNTO - FD-17600 ..... A 4 10000
EJE DELANTERO, CONJUNTO - 17800 - HD ☒ ..... A 4 10600
EJE DELANTERO, CONJUNTO - 17900 ..... A 4 10700
EJE DELANTERO, CONJUNTO - 17600 WT ☒ ..... A 4 11000
EJE TRASERO, CONJUNTO RD 19500
EXTRA-FUERTE REFORZADO ..... A 4 20700
EJE TRASERO, CONJUNTO RD-17900 ..... A 4 21200
EJE TRASERO, CONJUNTO RD17800
EXTRA-FUERTE REFORZADO ..... A 4 20610
EJE TRASERO, CONJUNTO RD17600 RODADA ANCHA ☒ ..... A 4 21000
EJE, CONJUNTO DEL CABALLETE ..... B 1 15070
EMBRAGUE, CONJUNTO, ALTA ..... A 3 12000
ESTRUCTURA DEL TANQUE HIDRÁULICO ..... A 9 16050
EXTINTOR DE FUEGO ..... F 2 80000

## F

FILTRO DEL AIRE ..... A 1 25100
..... A 1 25200
FRENO DE ESTACIONAMIENTO ..... A 7 25000
FRENO DEL DISCO DE CALIBRE ..... A 7 10150
FRENO SERVICIO - CALIBRADOR DISCO ..... A 7 10150
FRENO SERVICIO - DISCO ☒ ..... A 7 10100
FRENO SERVICIO - DISCO ..... A 7 10200
FRENO SERVICIO - TAMBOR ..... A 7 10000
FRENO SERVICIO - TAMBOR ☒ ..... A 7 10050
FRENOS-SOPORTE Y MONTURA ..... A 7 40150
FRENOS, ESTACIONAMIENTO ..... A 7 25000

## G

GRAPAS ..... F 2 95000
GRUPO DE EMBRAGUE DE LA TRANSMISIÓN, ALTA ..... A 3 12000
GUINCHE - CONJUNTO CILINDRO DE
FRENO-GEARMATIC-19 ..... A 6 19000
GUINCHE - CONJUNTO CORONA Y
PIÑÓN-GEARMATIC-19 ..... A 6 20000
GUINCHE-ARBOL INPULSOR DEL TAMBOR DE CABLES
Y EMBRAGUE W-300 ..... A 6 22010
GUINCHE-ARBOL INPULSOR DEL TAMBOR DE CABLES
Y EMBRAGUE W311-1 ..... A 6 23000
GUINCHE-EMBRAGUE DE ENTRADA, EJE PIÑON Y
GRUPO DEL EJE CORONA W-300 ..... A 6 24050
GUINCHE-EMBRAGUE DE ENTRADA, EJE PIÑON Y
EJE CORONA W-311-1 ..... A 6 24150
GUINCHE, HIDRAULICA ..... A 6 10040
..... A 6 11010
GUINCHOE - TAMBOR DE CABLES Y BANDA DE
FRENOS-GEARMATIC-19 ..... A 6 18000

## H

HIDRÁULICA CABEZA MOTOR ..... A 10 12000
HIDRÁULICA-ARCO Y GARRA ..... A 10 10030
HIDRAULICA-CABEZA DEL MOTOR ..... A 10 12000
HIDRAULICOS, DIRECCION Y CUCHILLA ..... A 9 10060

## J

JUEGO CONTRAFUEGO ..... H 1 10050
JUEGO DE AYUDA PARA ARRANQUE RÁPIDO ..... A 1 40000

## L

LAMINA Y SOPORTE ..... B 3 10010
LUBRIFICACION DE LA CUNA ..... B 1 16000
LUCES☒ ..... F 2 90000
..... F 2 90050
..... F 2 90450
..... F 2 90500

## M

MANDOS DE DIRECCIÓN Y CUCHILLAS ..... A 9 20100
..... A 9 20200
MANDOS-ARCO Y GARRA ..... A 10 20150
MONTAJE DEL MOTOR Y LUBRICACIÓN ..... A 1 15150
..... A 1 15200
..... A 1 15250
MOTOR, FILTROS PARA ..... J 1 50000

## P

PANEL DE INSTRUMENTOS ..... F 1 20050
..... F 1 20350
PATAS DE MONTAJE ELÁSTICO DEL MOTOR GM ..... A 1 15060
POLEA - GUIA Y MONTURA ..... B 2 10000

## R

RADIADOR Y CONEXIONES ..... A 1 10305
..... A 1 10320
..... A 1 10330
..... A 1 10500
..... A 1 10550
..... A 1 10575
..... A 1 10600

## S

SILENCIADOR ..... A 1 20125
..... A 1 20150
..... A 1 20200
SILENCIADOR DEL FILTRO DE AIRE Y SOPORTE ..... A 1 20125
..... A 1 20150
..... A 1 20200
SISTEMA DE ESCAPE ..... A 1 20125
..... A 1 20150
..... A 1 20200

# INDICE ALFABÉTICO (cont.)

## S


SISTEMA ELECTRICO ..... F 2 51080
..... F 2 51200
..... F 2 51250
SISTEMA HIDRAULICO DE DIRECCION Y DE LAMINA ..... A 9 10060
SISTEMA HIDRÁULICO, TRANSMISIÓN & CONVERTIDOR DE PAR ..... A 8 10050
..... A 8 10110
..... A 8 10130
SOPORTE DE LA TRANSMISION ..... A 3 15050
..... A 3 15150
SOPORTE DEL EJE TRASERO ..... B 1 23000
..... B 1 23050
..... B 1 23100
..... B 1 23150
..... B 1 23200
SOPORTE PISO Y ASIENTO ..... C 1 10040
..... C 1 10065
SOPORTE PLANET CONJUNTO FD 17600 & RD 17600 ..... A 4 30100
SOPORTE PLANET CONJUNTO FD & RD 17620 & 17800 ..... A 4 30115
SOPORTE PLANET CONJUNTO, 17630, 19600, 19640, 19650 & 33600 ..... A 4 30320


## T


TAMBOR DE CONTROLS DEL FRENO DE SERVICIO ..... A 7 15100
..... A 7 15150
..... A 7 15200
TRANSMISION Y CONVERTIDORES HIDRAULICOS ..... A 8 10050
..... A 8 10110
..... A 8 10130
TRANSMISIÓN, CONJUNTO - 2420 ..... A 3 10000
..... A 3 10050


## U


UNIDAD MANDO PRINCIPAL DEL GUINCHE-GEARMATIC .... A 6 13000
UNIDAD MANDO PRINCIPAL DEL GUINCHE-CLARK ..... A 6 14000


## V


VÁLVULA, REGULADOR ..... A 2 25050
VÁLVULA DE CERRADURA DE GARRA ..... E 2 40000
VÁLVULA DE CONTROL DE TRANSMISIÓN ..... A 3 13050
..... A 3 13050
VÁLVULA DE CONTROL, ARCO, AGARRADERA Y MOTOR .... E 2 30650
VÁLVULA DE CONTROL, DIRECCION Y CUCHILLA ..... E 2 30100
..... E 2 30200
VÁLVULA DEL REGULADOR ..... A 2 25050
VÁLVULA, CERRADURA DE GARRA ..... E 2 40000
VALVULA, CONTROL DE TRANSMISION ..... A 3 13050
VÁLVULA, DIRECCION Y CUCHILLA ..... E 2 30100
..... E 2 30200

INTENTIONALLY BLANK

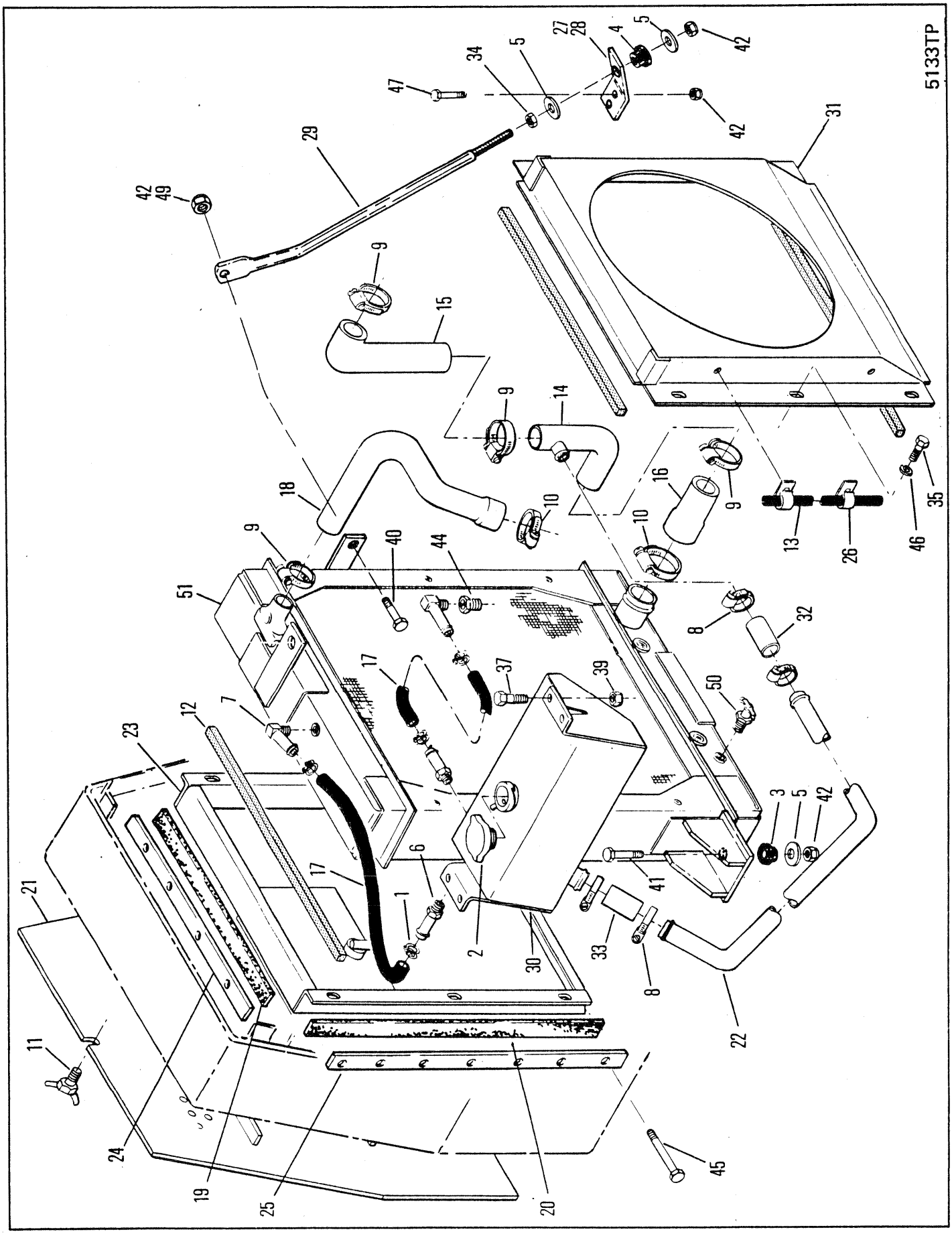
5133TP

# RADIATOR & CONNECTIONS
# RADIATEUR ET CONNEXION
# KÜHLER UND VERBINDUNGEN
# RADIADOR E CONEXÕES
# RADIADOR Y CONEXIONES

| No. | Part No. | Qty | Description | Description | Benennung | Descrição | Descripción |
|---|---|---|---|---|---|---|---|
| 1 | **364199** | 4 | Clamp | pince | Schelle | braçadeira | abrazadera |
| 2 | **1926961** | 1 | Cap | chapeau | Kappe | tampa | tapa |
| 3 | **569739** | 2 | Mount | support | Befestigung | apoio | montura |
| 4 | **584501** | 2 | Mount | support | Befestigung | apoio | montura |
| 5 | **616796** | 6 | Washer | rondelle | Scheibe | arruela | arandela |
| 6 | **666838** | 2 | Connector | raccord | Verbindungsstück | ligador | conector |
| 7 | **666863** | 2 | Connector | raccord | Verbindungsstück | ligador | conector |
| 8 | **756853** | 4 | Clamp | pince | Schelle | braçadeira | abrazadera |
| 9 | **784663** | 4 | Clamp | pince | Schelle | braçadeira | abrazadera |
| 10 | **875248** | 2 | Clamp | pince | Schelle | braçadeira | abrazadera |
| 11 | **1901362** | 1 | Bolt | boulon | Bolzen | parafuso | bulón |
| 12 | ●**1901632** | 4 | Weatherstrip | calfatage | Zugluftabschliesser | tira vedadora | calafate ventana |
| 13 | **1904058** | 1 | Hose | tuyau flexible | Schlauch | mangueira | manguera |
| 14 | **1904588** | 1 | Tube | tube | Rohr | tubo | tubo |
| 15 | **1904595** | 1 | Hose | tuyau flexible | Schlauch | mangueira | manguera |
| 16 | **1904700** | 1 | Hose | tuyau flexible | Schlauch | mangueira | manguera |
| 17 | **1904728** | 2 | Hose | tuyau flexible | Schlauch | mangueira | manguera |
| 18 | **1904746** | 1 | Hose | tuyau flexible | Schlauch | mangueira | manguera |
| 19 | **1905762** | 2 | Rubber strip | bande de caoutchouc | Gummistriefen | tira de borracha | tira de goma |
| 20 | **1905766** | 2 | Rubber strip | bande de caoutchouc | Gummistriefen | tira de borracha | tira de goma |
| 21 | **1908725** | 1 | Grille | grille | Grill | grade | careta |
| 22 | **1909533** | 1 | Tube | tube | Rohr | tubo | tubo |
| 23 | **1911514** | 1 | Front shroud | capot avant | Vord Haube | arco de ref diant | cubierta delant |
| 24 | **1911520** | 2 | Support strip | bande du support | Stützstreifen | tira de apoio | tira de soporte |
| 25 | **1911522** | 2 | Support strip | bande du support | Stützstreifen | tira de apoio | tira de soporte |
| 26 | **1914340** | 2 | Clip | attache | Schelle | braçadeira | abrazadera |
| 27 | **1914969** | 1 | Bracket | support | Winkel | grampo | grampa |
| 28 | **1914970** | 1 | Bracket | support | Winkel | grampo | grampa |
| 29 | **1915040** | 2 | Rod | tige | Stange | varão | varilla |
| 30 | **1915188** | 1 | Surge tank | réservoir dexpan | Buffertank | tanque de compens | tq golpe sobrten |
| 31 | **1904701** | 1 | Shroud | enveloppe | Umkleidung | proteção | envolvente |
| 32 | **1M008030** | 2 | Hose | tuyau flexible | Schlauch | mangueira | manguera |
| 33 | **1M008040** | 1 | Hose | tuyau flexible | Schlauch | mangueira | manguera |
| 34 | **8D000008** | 2 | Nut | écrou | Mutter | porca | tuerca |
| 35 | **17C000410** | 16 | Bolt | boulon | Bolzen | parafuso | bulón |
| 36 | †**17C000412** | 4 | Bolt | boulon | Bolzen | parafuso | bulón |
| 37 | **17C000620** | 12 | Bolt | boulon | Bolzen | parafuso | bulón |
| 38 | †**17D000001** | 16 | Nut | écrou | Mutter | porca | tuerca |
| 39 | **17D000003** | 4 | Nut | écrou | Mutter | porca | tuerca |
| 40 | **18C000828** | 2 | Bolt | boulon | Bolzen | parafuso | bulón |
| 41 | **18C000844** | 2 | Bolt | boulon | Bolzen | parafuso | bulón |
| 42 | **18D000008** | 10 | Nut | écrou | Mutter | porca | tuerca |
| 43 | †**19F000001** | 1 | Reducer | réducteur | Reduzierstück | redutor | reductor |
| 44 | **19F000004** | 1 | Adapter | adaptateur | Zwischenstück | adaptador | adaptador |
| 45 | **17C000412** | 14 | Bolt | boulon | Bolzen | parafuso | bulón |
| 46 | **24E000004** | 12 | Lockwasher | rondelle frein | Sicherungsscheibe | arruela de pressão | arandela seguridad |
| 47 | **24E000824** | 4 | Bolt | boulon | Bolzen | parafuso | bulón |
| 48 | †**25E000013** | 12 | Flatwasher | rondelle plate | Unterlegscheibe | arruela chata | arandela plana |
| 49 | †**25E000021** | 2 | Flatwasher | rondelle plate | Unterlegscheibe | arruela chata | arandela plana |
| 50 | **72F000002** | 1 | Draincock | robinet vidange | Abflusshahn | torneira purga | grifo purga |
| 51 | [1]○**1915103** | 1 | Radiator assy | radiateur ens | Kühler vollst | radiador conj | radiador conj |

[1] Ref RSG 160A, 181A & 138B

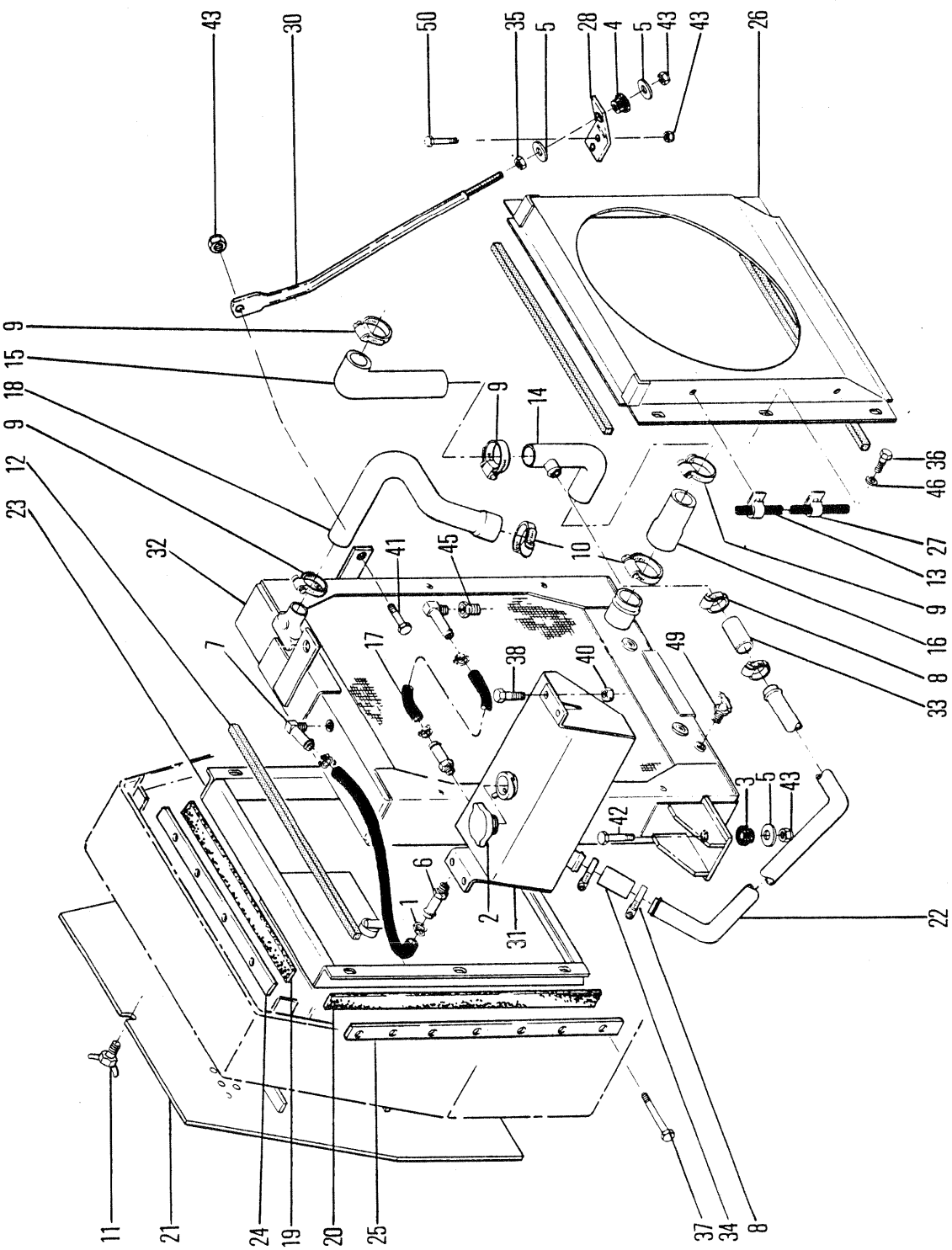
5135TP
43
30
50
35
5
28
4
5
43
43
26
9
15
18
9
12
23
9
14
32
41
45
10
46
36
27
13
9
16
8
33
7
17
38
40
49
3
5
43
42
6
1
2
31
22
11
21
24
19
20
25
37
34
8

# RADIATOR & CONNECTIONS
# RADIATEUR ET CONNEXION
# KÜHLER UND VERBINDUNGEN
# RADIADOR E CONEXÕES
# RADIADOR Y CONEXIONES

| No. | Part No. | Qty | Description | Description | Benennung | Descrição | Descripción |
|---|---|---|---|---|---|---|---|
| 1 | **364199** | 4 | Clamp | pince | Schelle | braçadeira | abrazadera |
| 2 | **1926961** | 1 | Cap | chapeau | Kappe | tampa | tapa |
| 3 | **569739** | 2 | Mount | support | Befestigung | apoio | montura |
| 4 | **584501** | 2 | Mount | support | Befestigung | apoio | montura |
| 5 | **616796** | 6 | Washer | rondelle | Scheibe | arruela | arandela |
| 6 | **666838** | 2 | Connector | raccord | Verbindungsstück | ligador | conector |
| 7 | **666863** | 2 | Connector | raccord | Verbindungsstück | ligador | conector |
| 8 | **756853** | 4 | Clamp | pince | Schelle | braçadeira | abrazadera |
| 9 | **784663** | 4 | Clamp | pince | Schelle | braçadeira | abrazadera |
| 10 | **875248** | 2 | Clamp | pince | Schelle | braçadeira | abrazadera |
| 11 | **1901362** | 1 | Bolt | boulon | Bolzen | parafuso | bulón |
| 12 | ●**1901632** | 4 | Weatherstrip | calfatage | Zugluftabschliesser | tira vedadora | calafate ventana |
| 13 | **1904058** | 1 | Hose | tuyau flexible | Schlauch | mangueira | manguera |
| 14 | **1904588** | 1 | Tube | tube | Rohr | tubo | tubo |
| 15 | **1904595** | 1 | Hose | tuyau flexible | Schlauch | mangueira | manguera |
| 16 | **1904700** | 1 | Hose | tuyau flexible | Schlauch | mangueira | manguera |
| 17 | **1904728** | 2 | Hose | tuyau flexible | Schlauch | mangueira | manguera |
| 18 | **1904746** | 1 | Hose | tuyau flexible | Schlauch | mangueira | manguera |
| 19 | **1905762** | 2 | Rubber strip | bande de caoutchouc | Gummistriefen | tira de borracha | tira de goma |
| 20 | **1905766** | 2 | Rubber strip | bande de caoutchouc | Gummistriefen | tira de borracha | tira de goma |
| 21 | **1908725** | 1 | Grille | grille | Grill | grade | careta |
| 22 | **1909533** | 1 | Tube | tube | Rohr | tubo | tubo |
| 23 | **1911514** | 1 | Front shroud | capot avant | Vord Haube | arco de ref diant | cubierta delant |
| 24 | **1911520** | 2 | Support strip | bande du support | Stützstreifen | tira de apoio | tira de soporte |
| 25 | **1911522** | 2 | Support strip | bande du support | Stützstreifen | tira de apoio | tira de soporte |
| 26 | **1913859** | 1 | Rear shroud | capot arrire | Hintere Haube | aro de ref tras | cubierta tras |
| 27 | **1914340** | 2 | Clamp | pince | Schelle | braçadeira | abrazadera |
| 28 | **1914969** | 1 | Bracket | support | Winkel | grampo | grampa |
| 29 | †**1914970** | 1 | Bracket | support | Winkel | grampo | grampa |
| 30 | **1915040** | 2 | Rod | tige | Stange | varão | varilla |
| 31 | **1915188** | 1 | Surge tank | réservoir dexpan | Buffertank | tanque de compens | tq golpe sobrten |
| 32 | [1]○**1916922** | 1 | Radiator | radiateur | Kühler | radiador | radiador |
| 33 | **1M008030** | 2 | Hose | tuyau flexible | Schlauch | mangueira | manguera |
| 34 | **1M008040** | 1 | Hose | tuyau flexible | Schlauch | mangueira | manguera |
| 35 | **8D000008** | 2 | Nut | écrou | Mutter | porca | tuerca |
| 36 | **17C000410** | 16 | Bolt | boulon | Bolzen | parafuso | bulón |
| 37 | **17C000412** | 4 | Bolt | boulon | Bolzen | parafuso | bulón |
| 38 | **17C000620** | 12 | Bolt | boulon | Bolzen | parafuso | bulón |
| 39 | †**17D000001** | 16 | Nut | écrou | Mutter | porca | tuerca |
| 40 | **17D000003** | 4 | Nut | écrou | Mutter | porca | tuerca |
| 41 | **18C000828** | 2 | Bolt | boulon | Bolzen | parafuso | bulón |
| 42 | **18C000844** | 2 | Bolt | boulon | Bolzen | parafuso | bulón |
| 43 | **18D000008** | 10 | Nut | écrou | Mutter | porca | tuerca |
| 44 | †**19F000001** | 1 | Reducer | réducteur | Reduzierstück | redutor | reductor |
| 45 | **19F000004** | 1 | Adapter | adaptateur | Zwischenstück | adaptador | adaptador |
| 46 | **24E000004** | 12 | Lockwasher | rondelle frein | Sicherungsscheibe | arruela de pressão | arandela seguridad |
| 47 | †**25E000013** | 12 | Flatwasher | rondelle plate | Unterlegscheibe | arruela chata | arandela plana |
| 48 | †**25E000021** | 2 | Flatwasher | rondelle plate | Unterlegscheibe | arruela chata | arandela plana |
| 49 | **72F000002** | 1 | Draincock | robinet vidange | Abflusshahn | torneira purga | grifo purga |
| 50 | **18C000824** | 4 | Bolt | boulon | Bolzen | parafuso | bulón |

[1] Ref RSG 172 & 138B

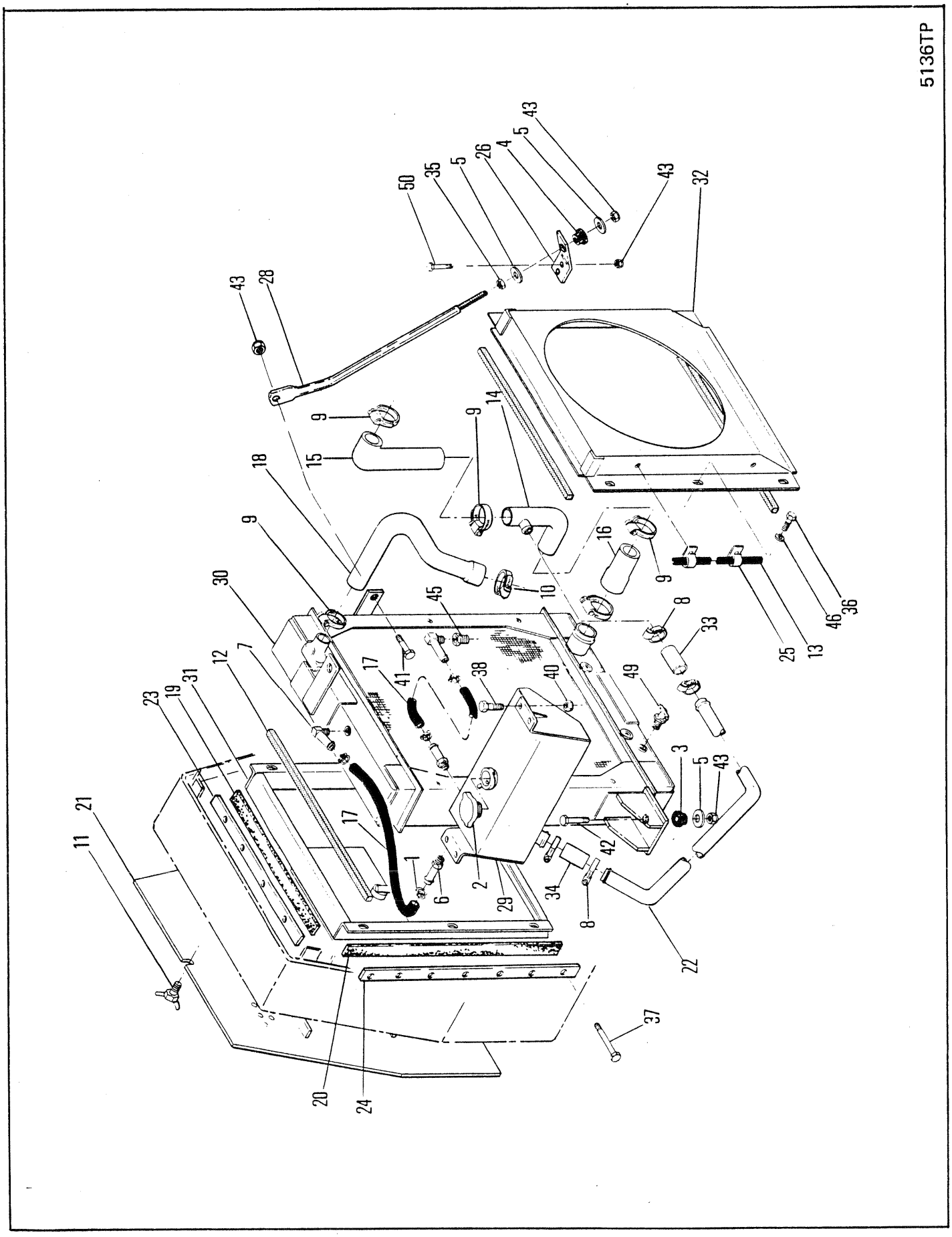
5136TP
1
2
3
4
5
6
7
8
9
10
11
12
13
14
15
16
17
18
19
20
21
22
23
24
25
26
28
29
30
31
32
33
34
35
36
37
38
40
41
42
43
45
46
49
50

# RADIATOR & CONNECTIONS
# RADIATEUR ET CONNEXION
# KÜHLER UND VERBINDUNGEN
# RADIADOR E CONEXÕES
# RADIADOR Y CONEXIONES

| No. | Part No. | Qty | Description | Description | Benennung | Descrição | Descripción |
|---|---|---|---|---|---|---|---|
| 1 | **364199** | 4 | Clamp | pince | Schelle | braçadeira | abrazadera |
| 2 | **1926961** | 1 | Cap | chapeau | Kappe | tampa | tapa |
| 3 | **569739** | 2 | Mount | support | Befestigung | apoio | montura |
| 4 | **584501** | 2 | Mount | support | Befestigung | apoio | montura |
| 5 | **616796** | 6 | Washer | rondelle | Scheibe | arruela | arandela |
| 6 | **666838** | 2 | Connector | raccord | Verbindungsstück | ligador | conector |
| 7 | **666863** | 2 | Connector | raccord | Verbindungsstück | ligador | conector |
| 8 | **756853** | 4 | Clamp | pince | Schelle | braçadeira | abrazadera |
| 9 | **784663** | 4 | Clamp | pince | Schelle | braçadeira | abrazadera |
| 10 | **875248** | 2 | Clamp | pince | Schelle | braçadeira | abrazadera |
| 11 | **1901362** | 1 | Bolt | boulon | Bolzen | parafuso | bulón |
| 12 | ●**1901632** | 4 | Weatherstrip | calfatage | Zugluftabschliesser | tira vedadora | calafate ventana |
| 13 | **1904058** | 1 | Hose | tuyau flexible | Schlauch | mangueira | manguera |
| 14 | **1904588** | 1 | Tube | tube | Rohr | tubo | tubo |
| 15 | **1904595** | 1 | Hose | tuyau flexible | Schlauch | mangueira | manguera |
| 16 | **1904700** | 1 | Hose | tuyau flexible | Schlauch | mangueira | manguera |
| 17 | **1904728** | 2 | Hose | tuyau flexible | Schlauch | mangueira | manguera |
| 18 | **1904746** | 1 | Hose | tuyau flexible | Schlauch | mangueira | manguera |
| 19 | **1905762** | 2 | Rubber strip | bande de caoutchouc | Gummistriefen | tira de borracha | tira de goma |
| 20 | **1905766** | 2 | Rubber strip | bande de caoutchouc | Gummistriefen | tira de borracha | tira de goma |
| 21 | **1908725** | 1 | Grille | grille | Grill | grade | careta |
| 22 | **1909533** | 1 | Tube | tube | Rohr | tubo | tubo |
| 23 | **1911520** | 2 | Support strip | bande du support | Stützstreifen | tira de apoio | tira de soporte |
| 24 | **1911522** | 2 | Support strip | bande du support | Stützstreifen | tira de apoio | tira de soporte |
| 25 | **1914340** | 2 | Clamp | pince | Schelle | braçadeira | abrazadera |
| 26 | **1914969** | 1 | Bracket | support | Winkel | grampo | grampa |
| 27 | †**1914970** | 1 | Bracket | support | Winkel | grampo | grampa |
| 28 | **1915040** | 2 | Rod | tige | Stange | varão | varilla |
| 29 | **1915188** | 1 | Surge tank | réservoir dexpan | Buffertank | tanque de compens | tq golpe sobrten |
| 30 | ○**1922459** | 1 | Radiator | radiateur | Kühler | radiador | radiador |
| 31 | **1922528** | 1 | Front shroud | capot avant | Vord Haube | arco de ref diant | cubierta delant |
| 32 | **1922531** | 1 | Shroud | enveloppe | Umkleidung | proteção | envolvente |
| 33 | **1M008030** | 2 | Hose | tuyau flexible | Schlauch | mangueira | manguera |
| 34 | **1M008040** | 1 | Hose | tuyau flexible | Schlauch | mangueira | manguera |
| 35 | **8D000008** | 2 | Nut | écrou | Mutter | porca | tuerca |
| 36 | **17C000410** | 16 | Bolt | boulon | Bolzen | parafuso | bulón |
| 37 | **17C000412** | 4 | Bolt | boulon | Bolzen | parafuso | bulón |
| 38 | **17C000620** | 12 | Bolt | boulon | Bolzen | parafuso | bulón |
| 39 | †**17D000001** | 16 | Nut | écrou | Mutter | porca | tuerca |
| 40 | **17D000003** | 4 | Nut | écrou | Mutter | porca | tuerca |
| 41 | **18C000828** | 2 | Bolt | boulon | Bolzen | parafuso | bulón |
| 42 | **18C000844** | 2 | Bolt | boulon | Bolzen | parafuso | bulón |
| 43 | **18D000008** | 10 | Nut | écrou | Mutter | porca | tuerca |
| 44 | †**19F000001** | 1 | Reducer | réducteur | Reduzierstück | redutor | reductor |
| 45 | **19F000004** | 1 | Adapter | adaptateur | Zwischenstück | adaptador | adaptador |
| 46 | **24E000004** | 12 | Lockwasher | rondelle frein | Sicherungsscheibe | arruela de pressão | arandela seguridad |
| 47 | †**25E000013** | 12 | Flatwasher | rondelle plate | Unterlegscheibe | arruela chata | arandela plana |
| 48 | †**25E000021** | 2 | Flatwasher | rondelle plate | Unterlegscheibe | arruela chata | arandela plana |
| 49 | **72F000002** | 1 | Draincock | robinet vidange | Abflusshahn | torneira purga | grifo purga |
| 50 | **18C000824** | 4 | Bolt | boulon | Bolzen | parafuso | bulón |
| 51 | †**1991985** | 1 | Grid | grille | Grill | grelha | rejilla |

666GM 513G-2031-CAC→513G-9999-CAC
666GMGR 515A-101-CAC→515A-9999-CAC

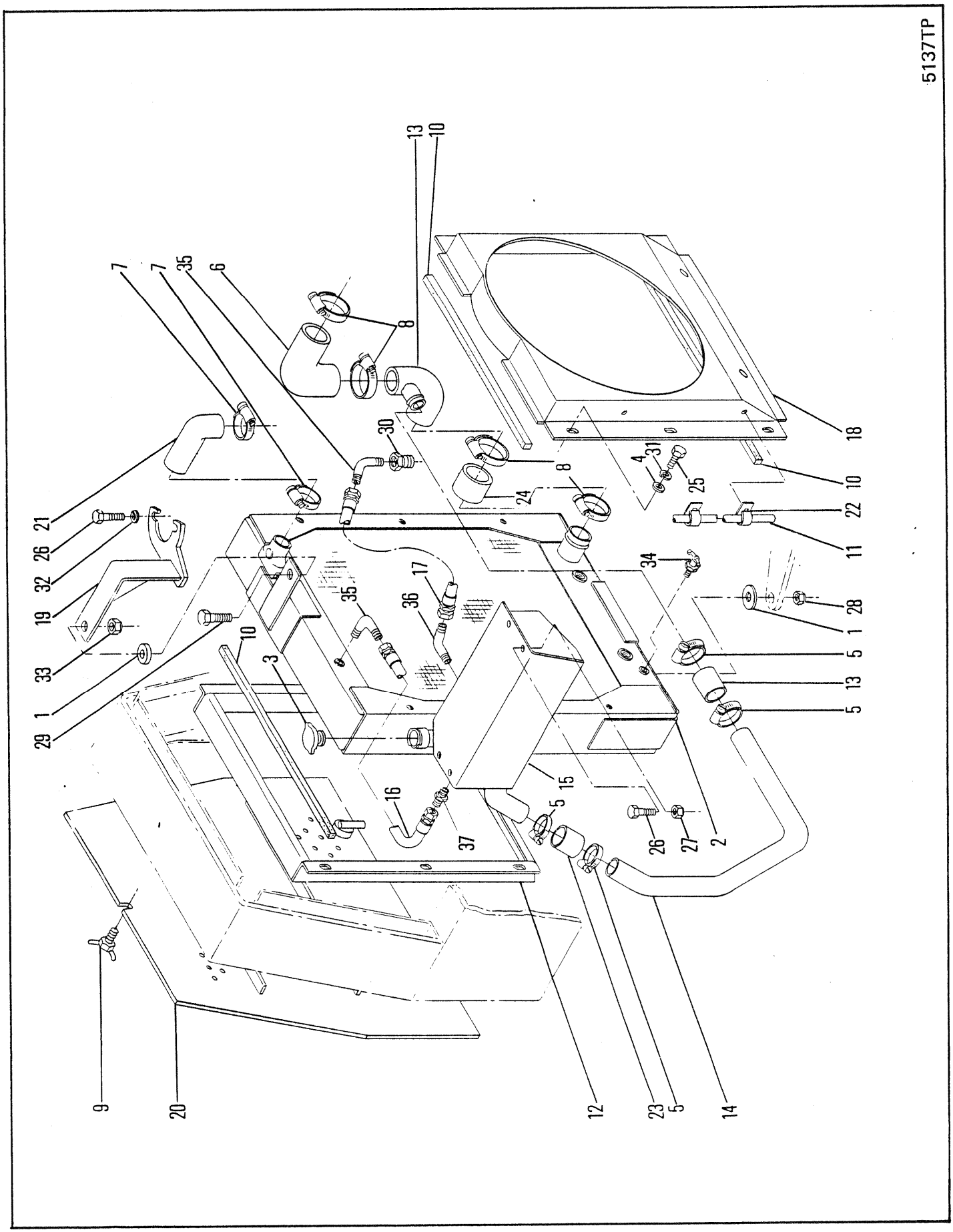
5137TP
13
10
7
7
35
6
8
30
18
4
31
25
10
8
24
22
11
21
26
32
19
33
1
29
17
35
36
34
28
1
5
13
5
10
3
15
16
5
37
26
27
2
9
20
12
23
5
14

# RADIATOR & CONNECTIONS
# RADIATEUR ET CONNEXION
# KÜHLER UND VERBINDUNGEN
# RADIADOR E CONEXÕES
# RADIADOR Y CONEXIONES

| No. | Part No. | Qty | Description | Description | Benennung | Descrição | Descripción |
|---|---|---|---|---|---|---|---|
| 1 | **518233** | 3 | Pad | tampon | Polster | almofada | almohadilla |
| 2 | [1]**1909583** | 1 | Radiator | radiateur | Kühler | radiador | radiador |
| 3 | **1926961** | 1 | Cap | chapeau | Kappe | tampa | tapa |
| 4 | **619018** | 12 | Washer | rondelle | Scheibe | arruela | arandela |
| 5 | **756853** | 4 | Clamp | pince | Schelle | braçadeira | abrazadera |
| 6 | **792231** | 1 | Hose | tuyau flexible | Schlauch | mangueira | manguera |
| 7 | **875248** | 2 | Clamp | pince | Schelle | braçadeira | abrazadera |
| 8 | **879717** | 4 | Clamp | pince | Schelle | braçadeira | abrazadera |
| 9 | **1901362** | 1 | Bolt | boulon | Bolzen | parafuso | bulón |
| 10 | ●**1901632** | 4 | Weatherstrip | calfatage | Zugluftabschliesser | tira vedadora | calafate ventana |
| 11 | **1902246** | 1 | Tube | tube | Rohr | tubo | tubo |
| 12 | **1902322** | 1 | Shroud | enveloppe | Umkleidung | proteção | envolvente |
| 13 | **1902338** | 1 | Elbow | coude | Winkelrohr | cotovêlo | codo |
| 14 | **1902342** | 1 | Pipe | tuyau | rohr | cano | cao |
| 15 | **1902345** | 1 | Surge tank | réservoir dexpan | Buffertank | tanque de compens | tq golpe sobrten |
| 16 | **1903092** | 1 | Hose | tuyau flexible | Schlauch | mangueira | manguera |
| 17 | **1903130** | 1 | Hose | tuyau flexible | Schlauch | mangueira | manguera |
| 18 | **1904206** | 1 | Shroud | enveloppe | Umkleidung | proteção | envolvente |
| 19 | **1905107** | 1 | Bracket | support | Winkel | grampo | grampa |
| 20 | **1908725** | 1 | Grille | grille | Grill | grade | careta |
| 21 | **1913862** | 1 | Hose | tuyau flexible | Schlauch | mangueira | manguera |
| 22 | **1914340** | 2 | Clamp | pince | Schelle | braçadeira | abrazadera |
| 23 | **1M008030** | 2 | Hose | tuyau flexible | Schlauch | mangueira | manguera |
| 24 | **1M018030** | 1 | Hose | tuyau flexible | Schlauch | mangueira | manguera |
| 25 | **17C000408** | 12 | Bolt | boulon | Bolzen | parafuso | bulón |
| 26 | **17C000620** | 6 | Bolt | boulon | Bolzen | parafuso | bulón |
| 27 | **17D000003** | 4 | Nut | écrou | Mutter | porca | tuerca |
| 28 | **17D000006** | 2 | Nut | écrou | Mutter | porca | tuerca |
| 29 | **18C000820** | 1 | Bolt | boulon | Bolzen | parafuso | bulón |
| 30 | **19F000005** | 1 | Fitting | ajustage | Verbindung | ajuste | accesorio |
| 31 | **24E000004** | 12 | Lockwasher | rondelle frein | Sicherungsscheibe | arruela de pressão | arandela seguridad |
| 32 | **24E000006** | 2 | Lockwasher | rondelle frein | Sicherungsscheibe | arruela de pressão | arandela seguridad |
| 33 | **66D000008** | 1 | Nut | écrou | Mutter | porca | tuerca |
| 34 | **72F000002** | 1 | Draincock | robinet vidange | Abflusshahn | torneira purga | grifo purga |
| 35 | **83F000005** | 2 | Elbow | coude | Winkelrohr | cotovêlo | codo |
| 36 | **84F000005** | 1 | Elbow | coude | Winkelrohr | cotovêlo | codo |
| 37 | **89F000005** | 1 | Adapter | adaptateur | Zwischenstück | adaptador | adaptador |

[1] Ref RSG 138C

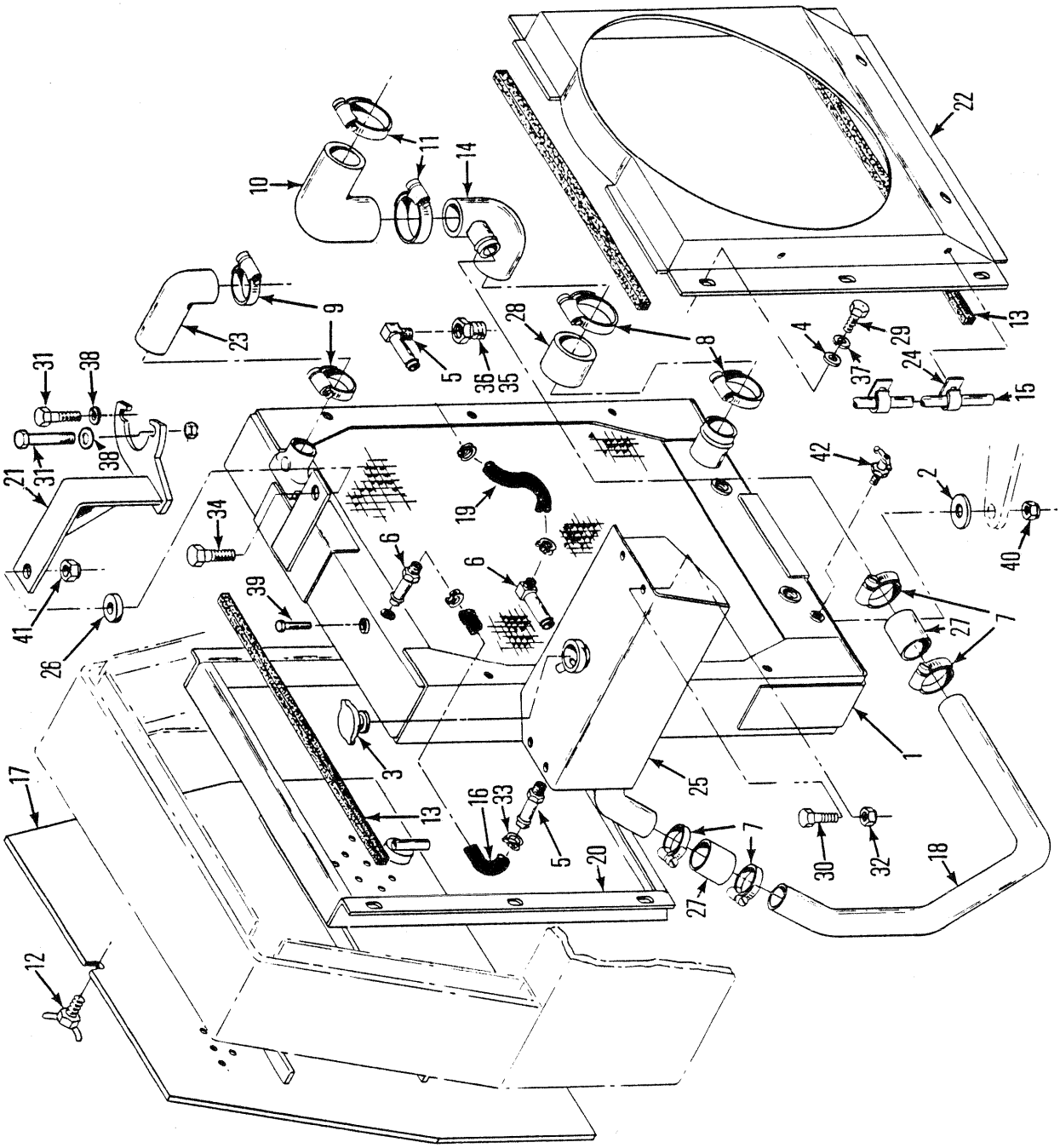
5138TP
1
2
3
4
5
6
7
8
9
10
11
12
13
14
15
16
17
18
19
20
21
22
23
24
25
26
27
28
29
30
31
32
33
34
35
36
37
38
39
40
41
42

# RADIATOR & CONNECTIONS
# RADIATEUR ET CONNEXION
# KÜHLER UND VERBINDUNGEN
# RADIADOR E CONEXÕES
# RADIADOR Y CONEXIONES

| No. | Part No. | Qty | Description | Description | Benennung | Descrição | Descripción |
|---|---|---|---|---|---|---|---|
| 1 | [1]1915103 | 1 | Radiator | radiateur | Kühler | radiador | radiador |
| 2 | 518275 | 2 | Pad | tampon | Polster | almofada | almohadílla |
| 3 | 1926961 | 1 | Cap | chapeau | Kappe | tampa | tapa |
| 4 | 619018 | 12 | Washer | rondelle | Scheibe | arruela | arandela |
| 5 | 666838 | 3 | Fitting | ajustage | Verbindung | ajuste | accesorio |
| 6 | 666863 | 1 | Fitting | ajustage | Verbindung | ajuste | accesorio |
| 7 | 756833 | 2 | Clamp | pince | Schelle | braçadeira | abrazadera |
| 8 | 756853 | 2 | Clamp | pince | Schelle | braçadeira | abrazadera |
| 9 | 784663 | 2 | Clamp | pince | Schelle | braçadeira | abrazadera |
| 10 | 792231 | 1 | Hose | tuyau flexible | Schlauch | mangueira | manguera |
| 11 | 875248 | 2 | Clamp | pince | Schelle | braçadeira | abrazadera |
| 12 | 1901362 | 1 | Bolt | boulon | Bolzen | parafuso | bulón |
| 13 | ●1901632 | 4 | Weatherstrip | calfatage | Zugluftabschliesser | tira vedadora | calafate ventana |
| 14 | 1902338 | 1 | Elbow | coude | Winkelrohr | cotovêlo | codo |
| 15 | 1904058 | 1 | Tube | tube | Rohr | tubo | tubo |
| 16 | 1906582 | 1 | Hose | tuyau flexible | Schlauch | mangueira | manguera |
| 17 | 1908725 | 1 | Grlle | grille | Grill | grade | careta |
| 18 | 1908903 | 1 | Pipe | tuyau | rohr | cano | cao |
| 19 | 1908936 | 1 | Hose | tuyau flexible | Schlauch | mangueira | manguera |
| 20 | 1911514 | 1 | Shroud | enveloppe | Umkleidung | proteção | envolvente |
| 21 | 1913801 | 1 | Bracket | support | Winkel | grampo | grampa |
| 22 | 1913859 | 1 | Shroud | enveloppe | Umkleidung | proteção | envolvente |
| 23 | 1913862 | 1 | Hose | tuyau flexible | Schlauch | mangueira | manguera |
| 24 | 1914340 | 2 | Clamp | pince | Schelle | braçadeira | abrazadera |
| 25 | 1908902 | 1 | Surge tank | réservoir dexpan | Buffertank | tanque de compens | tq golpe sobrten |
| 26 | 518233 | 1 | Pad | tampon | Polster | almofada | almohadílla |
| 27 | 1M008040 | 1 | Hose | tuyau flexible | Schlauch | mangueira | manguera |
| 28 | 1M018030 | 1 | Hose | tuyau flexible | Schlauch | mangueira | manguera |
| 29 | 17C000410 | 12 | Bolt | boulon | Bolzen | parafuso | bulón |
| 30 | 17C000614 | 4 | Bolt | boulon | Bolzen | parafuso | bulón |
| 31 | 17C000620 | 2 | Bolt | boulon | Bolzen | parafuso | bulón |
| 32 | 17D000003 | 4 | Nut | écrou | Mutter | porca | tuerca |
| 33 | 17H000008 | 2 | Clamp | pince | Schelle | braçadeira | abrazadera |
| 34 | 18C000820 | 1 | Bolt | boulon | Bolzen | parafuso | bulón |
| 35 | 19F000001 | 1 | Bushing | chemise | Buchse | bucha | buje |
| 36 | 19F000004 | 1 | Bushing | chemise | Buchse | bucha | buje |
| 37 | 24E000004 | 12 | Lockwasher | rondelle frein | Sicherungsscheibe | arruela de pressão | arandela seguridad |
| 38 | 24E000006 | 2 | Lockwasher | rondelle frein | Sicherungsscheibe | arruela de pressão | arandela seguridad |
| 39 | 40K000002 | - | Plug | bouchon | Stopfen | bujão | tapón |
| 40 | 65D000010 | 2 | Nut | écrou | Mutter | porca | tuerca |
| 41 | 66D000008 | 1 | Nut | écrou | Mutter | porca | tuerca |
| 42 | 72F000002 | 1 | Draincock | robinet vidange | Abflusshahn | torneira purga | grifo purga |

[1] Ref RSG 138B

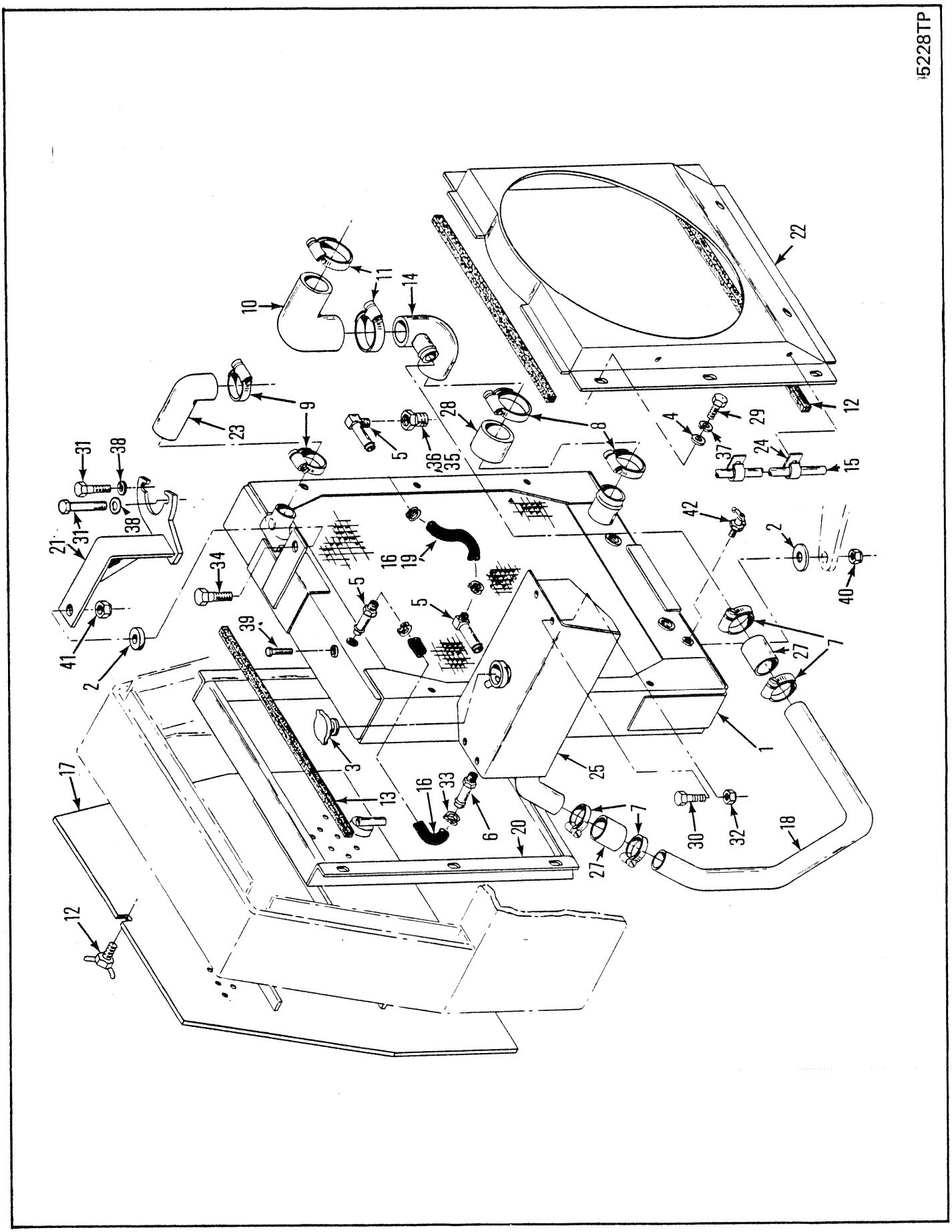
5228TP
1
2
3
4
5
6
7
8
9
10
11
12
13
14
15
16
17
18
19
20
21
22
23
24
25
27
28
29
30
31
32
33
34
35
36
37
38
39
40
41
42

# RADIATOR & CONNECTIONS
# RADIATEUR ET CONNEXION
# KÜHLER UND VERBINDUNGEN
# RADIADOR E CONEXÕES
# RADIADOR Y CONEXIONES

| No. | Part No. | Qty | Description | Description | Benennung | Descrição | Descripción |
|---|---|---|---|---|---|---|---|
| 1 | [1]1916922 | 1 | Radiator | radiateur | Kühler | radiador | radiador |
| 2 | 518275 | 2 | Pad | tampon | Polster | almofada | almohadílla |
| 3 | 1926961 | 1 | Cap | chapeau | Kappe | tampa | tapa |
| 4 | 619018 | 12 | Washer | rondelle | Scheibe | arruela | arandela |
| 5 | 666838 | 3 | Fitting | ajustage | Verbindung | ajuste | accesorio |
| 6 | 666863 | 1 | Fitting | ajustage | Verbindung | ajuste | accesorio |
| 7 | 756833 | 2 | Clamp | pince | Schelle | braçadeira | abrazadera |
| 8 | 756853 | 2 | Clamp | pince | Schelle | braçadeira | abrazadera |
| 9 | 784663 | 2 | Clamp | pince | Schelle | braçadeira | abrazadera |
| 10 | 792231 | 1 | Hose | tuyau flexible | Schlauch | mangueira | manguera |
| 11 | 875248 | 2 | Clamp | pince | Schelle | braçadeira | abrazadera |
| 12 | 1901362 | 1 | Bolt | boulon | Bolzen | parafuso | bulón |
| 13 | ●1901632 | 4 | Weatherstrip | calfatage | Zugluftabschliesser | tira vedadora | calafate ventana |
| 14 | 1902338 | 1 | Elbow | coude | Winkelrohr | cotovêlo | codo |
| 15 | 1904058 | 1 | Tube | tube | Rohr | tubo | tubo |
| 16 | 1906582 | 1 | Hose | tuyau flexible | Schlauch | mangueira | manguera |
| 17 | 1908725 | 1 | Grille | grille | Grill | grade | careta |
| 18 | 1908891 | 1 | Pipe | tuyau | rohr | cano | cao |
| 19 | 1908936 | 1 | Hose | tuyau flexible | Schlauch | mangueira | manguera |
| 20 | 1911514 | 1 | Shroud | enveloppe | Umkleidung | proteção | envolvente |
| 21 | 1913801 | 1 | Bracket | support | Winkel | grampo | grampa |
| 22 | 1913859 | 1 | Shroud | enveloppe | Umkleidung | proteção | envolvente |
| 23 | 1913862 | 1 | Hose | tuyau flexible | Schlauch | mangueira | manguera |
| 24 | 1914340 | 2 | Clamp | pince | Schelle | braçadeira | abrazadera |
| 25 | 1915187 | 1 | Surge tank | réservoir dexpan | Buffertank | tanque de compens | tq golpe sobrten |
| 26 | 1905313 | 1 | Hose | tuyau flexible | Schlauch | mangueira | manguera |
| 27 | 1M008030 | 1 | Hose | tuyau flexible | Schlauch | mangueira | manguera |
| 28 | 1M018030 | 1 | Hose | tuyau flexible | Schlauch | mangueira | manguera |
| 29 | 17C000410 | 12 | Bolt | boulon | Bolzen | parafuso | bulón |
| 30 | 17C000614 | 4 | Bolt | boulon | Bolzen | parafuso | bulón |
| 31 | 17C000620 | 2 | Bolt | boulon | Bolzen | parafuso | bulón |
| 32 | 17D000003 | 4 | Nut | écrou | Mutter | porca | tuerca |
| 33 | 17H000008 | 2 | Clamp | pince | Schelle | braçadeira | abrazadera |
| 34 | 18C000820 | 1 | Bolt | boulon | Bolzen | parafuso | bulón |
| 35 | 19F000001 | 1 | Bushing | chemise | Buchse | bucha | buje |
| 36 | 19F000004 | 1 | Bushing | chemise | Buchse | bucha | buje |
| 37 | 24E000004 | 12 | Lockwasher | rondelle frein | Sicherungsscheibe | arruela de pressão | arandela seguridad |
| 38 | 24E000006 | 2 | Lockwasher | rondelle frein | Sicherungsscheibe | arruela de pressão | arandela seguridad |
| 39 | 40K000002 | - | Plug | bouchon | Stopfen | bujão | tapón |
| 40 | 65D000010 | 2 | Nut | écrou | Mutter | porca | tuerca |
| 41 | 66D000008 | 1 | Nut | écrou | Mutter | porca | tuerca |
| 42 | 72F000002 | 1 | Draincock | robinet vidange | Abflusshahn | torneira purga | grifo purga |
| 43 | 518233 | 1 | Pad | tampon | Polster | almofada | almohadílla |

[1] Ref RSG 138B & 172

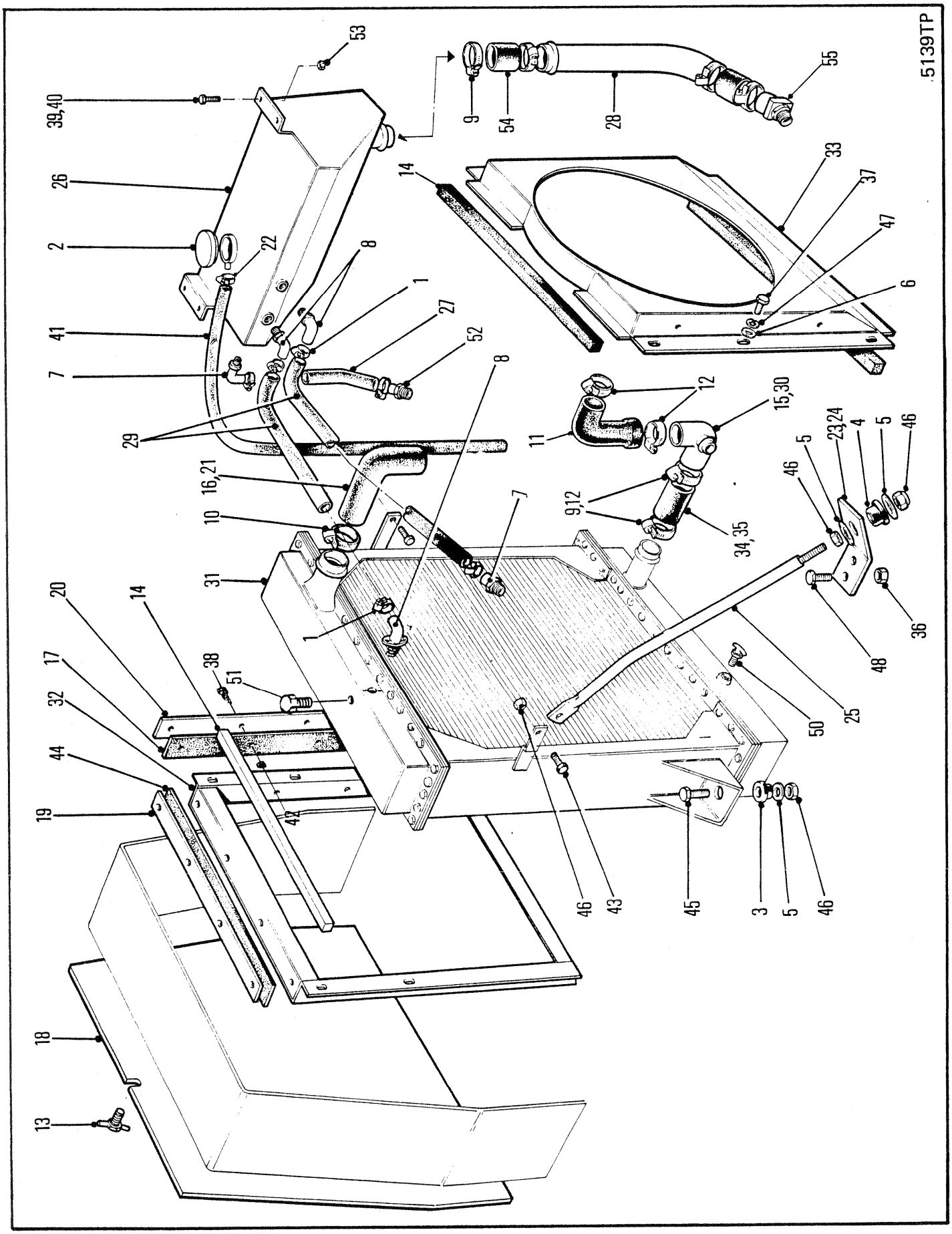
5139TP
53
39,40
26
2
41
7
29
22
8
1
27
52
8
9
54
28
55
14
33
37
47
6
12
11
15,30
16,21
10
9,12
34,35
31
7
1
20
14
17
38
51
32
44
19
42
18
13
46
43
45
3
5
46
50
25
48
36
5
23,24
4
5
46
46

## RADIATOR & CONNECTIONS
## RADIATEUR ET CONNEXION
## KÜHLER UND VERBINDUNGEN
## RADIADOR E CONEXÕES
## RADIADOR Y CONEXIONES

| No. | Part No. | Qty | Description | Description | Benennung | Descrição | Descripción |
|---|---|---|---|---|---|---|---|
| 1 | 364199 | 6 | Clamp | pince | Schelle | braçadeira | abrazadera |
| 2 | 1926961 | 1 | Cap | chapeau | Kappe | tampa | tapa |
| 3 | 569739 | 2 | Rubber mount | mont de caoutchouc | Gummibefestigung | montagem borracha | montura de caucho |
| 4 | 584501 | 2 | Rubber mount | mont de caoutchouc | Gummibefestigung | montagem borracha | montura de caucho |
| 5 | 616796 | 6 | Washer | rondelle | Scheibe | arruela | arandela |
| 6 | 619018 | 12 | Washer | rondelle | Scheibe | arruela | arandela |
| 7 | 666850 | 1 | Fitting | ajustage | Verbindung | ajuste | accesorio |
| 8 | 666863 | 1 | Fitting | ajustage | Verbindung | ajuste | accesorio |
| 9 | 756853 | 2 | Clamp | pince | Schelle | braçadeira | abrazadera |
| 10 | 784663 | 2 | Clamp | pince | Schelle | braçadeira | abrazadera |
| 11 | 792231 | 1 | Hose | tuyau flexible | Schlauch | mangueira | manguera |
| 12 | 879717 | 4 | Clamp | pince | Schelle | braçadeira | abrazadera |
| 13 | 1901362 | 1 | Bolt | boulon | Bolzen | parafuso | bulón |
| 14 | ●1901632 | 4 | Weatherstrip | calfatage | Zugluftabschliesser | tira vedadora | calafate ventana |
| 15 | 1902338 | 1 | Elbow | coude | Winkelrohr | cotovêlo | codo |
| 16 | 1902347 | 1 | Hose | tuyau flexible | Schlauch | mangueira | manguera |
| 17 | 1905766 | 2 | Rubber strip | bande de caoutchouc | Gummistriefen | tira de borracha | tira de goma |
| 18 | 1908725 | 1 | Grille assy | ensemble-grille | Grillsatz | conj da grade | conj de la rejilla |
| 19 | 1911520 | 2 | Support strip | bande du support | Stützstreifen | tira de apoio | tira de soporte |
| 20 | 1911522 | 2 | Support strip | bande du support | Stützstreifen | tira de apoio | tira de soporte |
| 21 | 1913862 | 1 | Hose | tuyau flexible | Schlauch | mangueira | manguera |
| 22 | 1914340 | 2 | Clamp | pince | Schelle | braçadeira | abrazadera |
| 23 | 1914969 | 1 | Bracket RH | support CD | Winkel R | grampo LD | grampa LD |
| 24 | 1914970 | 1 | Bracket LH | support CG | Winkel L | grampo LE | grampa LD |
| 25 | 1915040 | 1 | Rod | tige | Stange | varão | varilla |
| 26 | 1915296 | 1 | Surge tank | réservoir dexpan | Buffertank | tanque de compens | tq golpe sobrten |
| 27 | 1916087 | 2 | Hose | tuyau flexible | Schlauch | mangueira | manguera |
| 28 | 1917970 | 1 | Tube | tube | Rohr | tubo | tubo |
| 29 | 1917971 | 2 | Hose | tuyau flexible | Schlauch | mangueira | manguera |
| 30 | 1918518 | 1 | Elbow | coude | Winkelrohr | cotovêlo | codo |
| 31 | 1922459 | 1 | Radiator | radiateur | Kühler | radiador | radiador |
| 32 | 1922528 | 1 | Front shroud | capot avant | Vord Haube | arco de ref diant | cubierta delant |
| 33 | 1922529 | 1 | Rear shroud | capot arrire | Hintere Haube | aro de ref tras | cubierta tras |
| 34 | 1M0008030 | 2 | Hose | tuyau flexible | Schlauch | mangueira | manguera |
| 35 | 1M0018030 | 1 | Hose | tuyau flexible | Schlauch | mangueira | manguera |
| 36 | 8D0000008 | 2 | Nut | écrou | Mutter | porca | tuerca |
| 37 | 17C000410 | 12 | Bolt | boulon | Bolzen | parafuso | bulón |
| 38 | 17C000412 | 16 | Bolt | boulon | Bolzen | parafuso | bulón |
| 39 | 17C000614 | 4 | Bolt | boulon | Bolzen | parafuso | bulón |
| 40 | 17C000620 | 4 | Bolt | boulon | Bolzen | parafuso | bulón |
| 41 | 1904058 | 1 | Hose | tuyau flexible | Schlauch | mangueira | manguera |
| 42 | 17D000001 | 16 | Nut | écrou | Mutter | porca | tuerca |
| 43 | 18C000828 | 2 | Bolt | boulon | Bolzen | parafuso | bulón |
| 44 | 1905762 | 2 | Rubber strip | bande de caoutchouc | Gummistriefen | tira de borracha | tira de goma |
| 45 | 18C000844 | 2 | Bolt | boulon | Bolzen | parafuso | bulón |
| 46 | 18D000008 | 8 | Nut | écrou | Mutter | porca | tuerca |
| 47 | 24E000004 | 12 | Lockwasher | rondelle frein | Sicherungsscheibe | arruela de pressão | arandela seguridad |
| 48 | 18C000824 | 4 | Bolt | boulon | Bolzen | parafuso | bulón |
| 49 | †25E000021 | 2 | Washer | rondelle | Scheibe | arruela | arandela |
| 50 | 72F000002 | 1 | Draincock | robinet vidange | Abflusshahn | torneira purga | grifo purga |
| 51 | 40K000002 | 1 | Plug | bouchon | Stopfen | bujão | tapón |
| 52 | 666838 | 4 | Fitting | ajustage | Verbindung | ajuste | accesorio |
| 53 | 17D000003 | 8 | Nut | écrou | Mutter | porca | tuerca |
| 54 | 1M08034 | 2 | Hose | tuyau flexible | Schlauch | mangueira | manguera |
| 55 | 666857 | 1 | Fitting | ajustage | Verbindung | ajuste | accesorio |

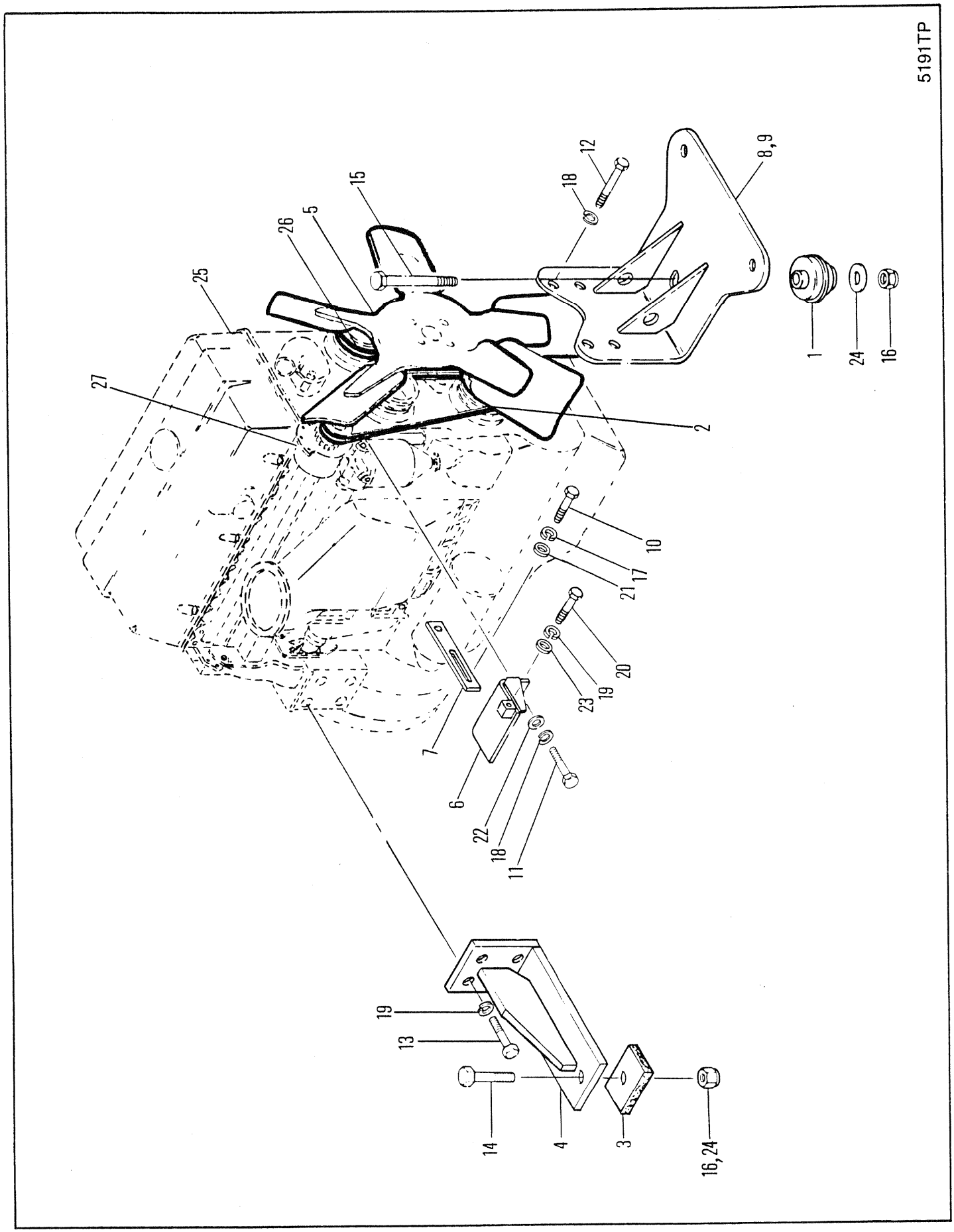
5191TP
1
2
3
4
5
6
7
8,9
10
11
12
13
14
15
16,24
16
17
18
19
20
21
22
23
24
25
26
27

# ENGINE MOUNTINGS GM
# SUPPORTS ÉLASTIQUE DU MOTEUR GM
# MOTORBEFESTIGUNGEN GM
# SUPORTES DE MONTAGEM DO MOTOR GM
# PATAS DE MONTAJE ELÁSTICO DEL MOTOR GM

| No. | Part No. | Qty | Description | Description | Benennung | Descrição | Descripción |
|---|---|---|---|---|---|---|---|
| 1 | **524703** | 1 | Pad | tampon | Polster | almofada | almohadílla |
| 2 | ○--------- | - | Alt belt | Courroie dalternateur | Alternatorriemen | Correia do alternador | Correa del alternador |
| 3 | **1900802** | 2 | Pad | tampon | Polster | almofada | almohadílla |
| 4 | **1901024** | 2 | Bracket | support | Winkel | grampo | grampa |
| 5 | ☒**1907711** | 1 | Sucker fan | ventilateur aspirant | Saugerventil | ventoinha aspiraçã | ventilador de succion |
| 6 | **1905417** | 1 | Bracket | support | Winkel | grampo | grampa |
| 7 | **1921275** | 1 | Strap | bande | Band | faixa | banda |
| 8 | **1909840** | 1 | Bracket | support | Winkel | grampo | grampa |
| 9 | [1]**1915184** | 1 | Bracket | support | Winkel | grampo | grampa |
| 10 | **17C000514** | 1 | Bolt | boulon | Bolzen | parafuso | bulón |
| 11 | **17C000616** | 3 | Bolt | boulon | Bolzen | parafuso | bulón |
| 12 | **17C000660** | 4 | Bolt | boulon | Bolzen | parafuso | bulón |
| 13 | **17C000824** | 8 | Bolt | boulon | Bolzen | parafuso | bulón |
| 14 | **17C001032** | 2 | Bolt | boulon | Bolzen | parafuso | bulón |
| 15 | **17C001048** | 1 | Bolt | boulon | Bolzen | parafuso | bulón |
| 16 | [2]**17D000009** | 3 | Nut | écrou | Mutter | porca | tuerca |
| 17 | **24E000005** | 1 | Lockwasher | rondelle frein | Sicherungsscheibe | arruela de pressão | arandela seguridad |
| 18 | **24E000006** | 7 | Lockwasher | rondelle frein | Sicherungsscheibe | arruela de pressão | arandela seguridad |
| 19 | **24E000008** | 9 | Lockwasher | rondelle frein | Sicherungsscheibe | arruela de pressão | arandela seguridad |
| 20 | **24E000840** | 1 | Bolt | boulon | Bolzen | parafuso | bulón |
| 21 | **25E000015** | 1 | Washer | rondelle | Scheibe | arruela | arandela |
| 22 | **25E000017** | 3 | Washer | rondelle | Scheibe | arruela | arandela |
| 23 | **25E000021** | 1 | Washer | rondelle | Scheibe | arruela | arandela |
| 24 | **25E000025** | 1 | Washer | rondelle | Scheibe | arruela | arandela |
| 25 | --------- | - | Engine | moteur | Motor | motor | motor |
| 26 | ○--------- | - | Fan belt | courr ventil | Treibrmn Vent | corr vent | corr vent |
| 27 | ○--------- | 1 | Alternator | alternateur | Alternator | alternador | alternador |

[1] 666&666Gr. ☐ Frame mounted Radiator
[1] 666&666Gr. ☐ Radiateur monté sur châssis
[1] 666&666Gr. ☐ Kühler-Rahmenmontage
[1] 666&666Gr. ☐ Radiador montado em chassi
[1] 666&666Gr. ☐ Radiador montado sobre bastidor

[2] Inc 24

666GM 513E-101-CAC➡513G-9999-CAC
666GMGR 515A-101-CAC➡515G-9999-CAC

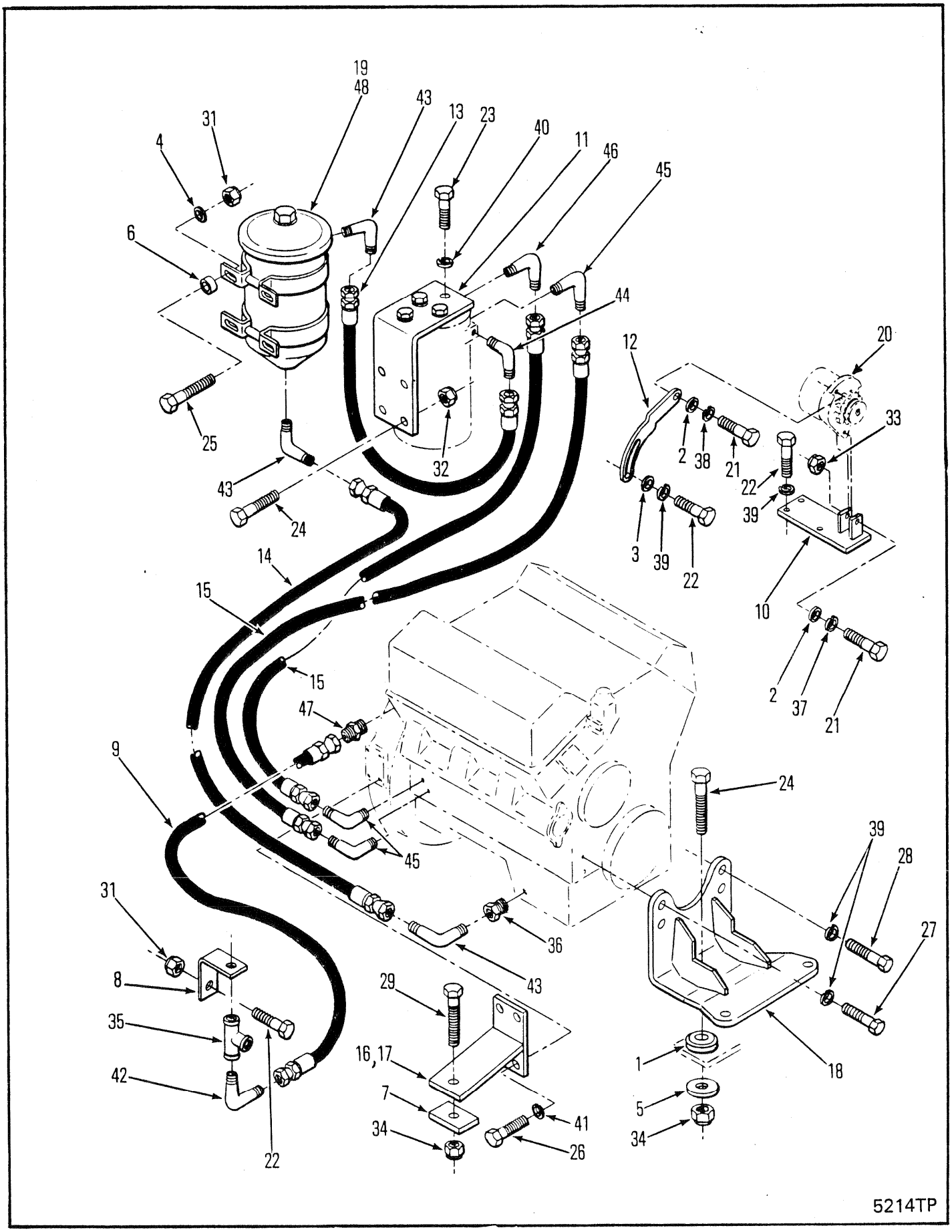
19
48
43
13
23
40
11
46
45
31
4
6
44
12
20
33
25
32
2
38
21
22
39
43
24
3
39
22
14
10
15
15
2
37
21
47
9
24
45
39
28
31
36
27
8
43
29
35
16,17
1
18
42
7
5
41
34
34
26
22
5214TP

# ENGINE MOUNTING & LUBRICATION
# MONTAGE ET LUBRIFICATION DU MOTEUR
# MOTORAUFBAU UND SCHMIERUNG
# MONTAGEM E LUBRICAÇÃO DO MOTOR
# MONTAJE DEL MOTOR Y LUBRICACIÓN

| No. | Part No. | Qty | Description | Description | Benennung | Descrição | Descripción |
|---|---|---|---|---|---|---|---|
| 1 | **524703** | 1 | Pad | tampon | Polster | almofada | almohadílla |
| 2 | **664403** | 2 | Washer | rondelle | Scheibe | arruela | arandela |
| 3 | **664404** | 1 | Washer | rondelle | Scheibe | arruela | arandela |
| 4 | **664424** | 4 | Washer | rondelle | Scheibe | arruela | arandela |
| 5 | **664427** | 1 | Washer | rondelle | Scheibe | arruela | arandela |
| 6 | **731135** | 4 | Spacer | entretoise | Distanzteil | espaçador | espaciador |
| 7 | **1900802** | 2 | Pad | tampon | Polster | almofada | almohadílla |
| 8 | **1902364** | 1 | Bracket | support | Winkel | grampo | grampa |
| 9 | **1902371** | 1 | Hose | tuyau flexible | Schlauch | mangueira | manguera |
| 10 | **1902378** | 1 | Bracket | support | Winkel | grampo | grampa |
| 11 | **1902379** | 1 | Bracket | support | Winkel | grampo | grampa |
| 12 | **1902380** | 1 | Arm | bras | Arm | braço | brazo |
| 13 | **1902396** | 1 | Hose | tuyau flexible | Schlauch | mangueira | manguera |
| 14 | **1903090** | 1 | Hose | tuyau flexible | Schlauch | mangueira | manguera |
| 15 | **1903093** | 2 | Hose | tuyau flexible | Schlauch | mangueira | manguera |
| 16 | **1904064** | 1 | Bracket | support | Winkel | grampo | grampa |
| 17 | **1904065** | 1 | Bracket | support | Winkel | grampo | grampa |
| 18 | **1905053** | 1 | Bracket | support | Winkel | grampo | grampa |
| 19 | ○--------- | - | Filter | filtre | filter | filtro | filtro |
| 20 | ○--------- | - | Alternator | alternateur | Alternator | alternador | alternador |
| 21 | **17C000514** | 2 | Bolt | boulon | Bolzen | parafuso | bulón |
| 22 | **17C000616** | 6 | Bolt | boulon | Bolzen | parafuso | bulón |
| 23 | **17C000716** | 4 | Bolt | boulon | Bolzen | parafuso | bulón |
| 24 | **17C000720** | 4 | Bolt | boulon | Bolzen | parafuso | bulón |
| 25 | **17C000736** | 4 | Bolt | boulon | Bolzen | parafuso | bulón |
| 26 | **17C000824** | 8 | Bolt | boulon | Bolzen | parafuso | bulón |
| 27 | **17C000832** | 2 | Bolt | boulon | Bolzen | parafuso | bulón |
| 28 | **17C000836** | 2 | Bolt | boulon | Bolzen | parafuso | bulón |
| 29 | **17C001032** | 2 | Bolt | boulon | Bolzen | parafuso | bulón |
| 30 | **17C001048** | 1 | Bolt | boulon | Bolzen | parafuso | bulón |
| 31 | **17D000003** | 1 | Nut | écrou | Mutter | porca | tuerca |
| 32 | **17D000004** | 4 | Nut | écrou | Mutter | porca | tuerca |
| 33 | **17D000006** | 1 | Nut | écrou | Mutter | porca | tuerca |
| 34 | **17D000009** | 3 | Nut | écrou | Mutter | porca | tuerca |
| 35 | **18F000001** | 1 | Tee | raccord T | T-Verbindungsstück | te | te |
| 36 | **19F000004** | 1 | Adapter | adaptateur | Zwischenstück | adaptador | adaptador |
| 37 | **23E000005** | 1 | Lockwasher | rondelle frein | Sicherungsscheibe | arruela de pressão | arandela seguridad |
| 38 | **24E000005** | 1 | Lockwasher | rondelle frein | Sicherungsscheibe | arruela de pressão | arandela seguridad |
| 39 | **24E000006** | 9 | Lockwasher | rondelle frein | Sicherungsscheibe | arruela de pressão | arandela seguridad |
| 40 | **24E000007** | 4 | Lockwasher | rondelle frein | Sicherungsscheibe | arruela de pressão | arandela seguridad |
| 41 | **24E000008** | 8 | Lockwasher | rondelle frein | Sicherungsscheibe | arruela de pressão | arandela seguridad |
| 42 | **83F000003** | 1 | Elbow | coude | Winkelrohr | cotovêlo | codo |
| 43 | **83F000004** | 3 | Elbow | coude | Winkelrohr | cotovêlo | codo |
| 44 | **83F000006** | 1 | Elbow | coude | Winkelrohr | cotovêlo | codo |
| 45 | **83F000008** | 4 | Elbow | coude | Winkelrohr | cotovêlo | codo |
| 46 | **84F000008** | 1 | Elbow | coude | Winkelrohr | cotovêlo | codo |
| 47 | **89F000003** | 1 | Fitting | ajustage | Verbindung | ajuste | accesorio |
| 48 | ○--------- | - | Decal | décalcamanie | Abziehbild | decalcomania | calcomania |
| 49 | †○--------- | - | Alt belt | Courroie dalternateur | Alternatorriemen | Correia do alternador | Correa del alternador |
| 50 | †○--------- | - | Fan belt | courr ventil | Treibrmn Vent | corr vent | corr vent |

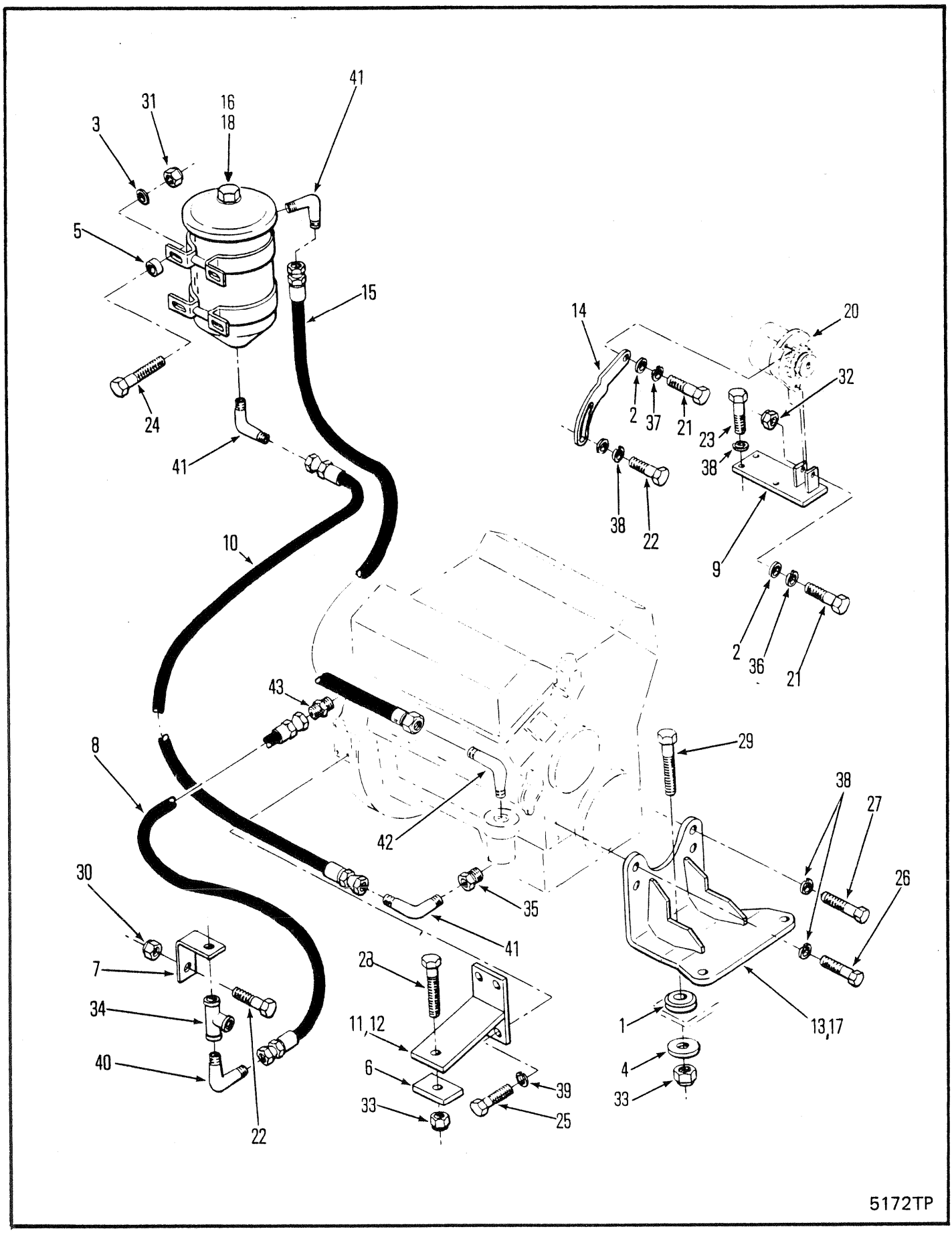
41
31
16
18
3
5
15
24
41
10
14
20
32
2
37
21
23
38
38
22
9
2
36
21
43
8
42
29
38
27
26
30
35
41
7
34
40
22
28
11,12
6
33
39
25
1
4
33
13,17
5172TP

# ENGINE MOUNTING & LUBRICATION
# MONTAGE ET LUBRIFICATION DU MOTEUR
# MOTORAUFBAU UND SCHMIERUNG
# MONTAGEM E LUBRICAÇÃO DO MOTOR
# MONTAJE DEL MOTOR Y LUBRICACIÓN

| No. | Part No. | Qty | Description | Description | Benennung | Descrição | Descripción |
|---|---|---|---|---|---|---|---|
| 1 | **524703** | 1 | Pad | tampon | Polster | almofada | almohadílla |
| 2 | **664403** | 2 | Washer | rondelle | Scheibe | arruela | arandela |
| 3 | **664424** | 4 | Washer | rondelle | Scheibe | arruela | arandela |
| 4 | **664427** | 1 | Washer | rondelle | Scheibe | arruela | arandela |
| 5 | **731135** | 4 | Spacer | entretoise | Distanzteil | espaçador | espaciador |
| 6 | **1900802** | 2 | Pad | tampon | Polster | almofada | almohadílla |
| 7 | **1902364** | 1 | Bracket | support | Winkel | grampo | grampa |
| 8 | **1902371** | 1 | Hose | tuyau flexible | Schlauch | mangueira | manguera |
| 9 | **1902378** | 1 | Bracket | support | Winkel | grampo | grampa |
| 10 | **1903090** | 1 | Hose | tuyau flexible | Schlauch | mangueira | manguera |
| 11 | **1904064** | 1 | Bracket RH | support CD | Winkel R | grampo LD | grampa LD |
| 12 | **1904065** | 1 | Bracket LH | support CG | Winkel L | grampo LE | grampa LD |
| 13 | **1905053** | 1 | Bracket | support | Winkel | grampo | grampa |
| 14 | **1906866** | 1 | Arm | bras | Arm | braço | brazo |
| 15 | **1907896** | 1 | Hose | tuyau flexible | Schlauch | mangueira | manguera |
| 16 | ○--------- | - | Filter | filtre | filter | filtro | filtro |
| 17 | [1]**1909838** | 1 | Bracket | support | Winkel | grampo | grampa |
| 18 | ○--------- | - | Decal | décalcamanie | Abziehbild | decalcomania | calcomania |
| 19 | †○--------- | - | Alt belt | Courroie dalternateur | Alternatorriemen | Correia do alternador | Correa del alternador |
| 20 | ○--------- | - | Alternator | alternateur | Alternator | alternador | alternador |
| 21 | **17C000514** | 2 | Bolt | boulon | Bolzen | parafuso | bulón |
| 22 | **17C000616** | 2 | Bolt | boulon | Bolzen | parafuso | bulón |
| 23 | **17C000620** | 4 | Bolt | boulon | Bolzen | parafuso | bulón |
| 24 | **17C000736** | 4 | Bolt | boulon | Bolzen | parafuso | bulón |
| 25 | **17C000824** | 8 | Bolt | boulon | Bolzen | parafuso | bulón |
| 26 | **17C000832** | 2 | Bolt | boulon | Bolzen | parafuso | bulón |
| 27 | **17C000836** | 2 | Bolt | boulon | Bolzen | parafuso | bulón |
| 28 | **17C001032** | 2 | Bolt | boulon | Bolzen | parafuso | bulón |
| 29 | **17C001048** | 1 | Bolt | boulon | Bolzen | parafuso | bulón |
| 30 | **17D000003** | 1 | Nut | écrou | Mutter | porca | tuerca |
| 31 | **17D000004** | 4 | Nut | écrou | Mutter | porca | tuerca |
| 32 | **17D000006** | 1 | Nut | écrou | Mutter | porca | tuerca |
| 33 | **17D000009** | 3 | Nut | écrou | Mutter | porca | tuerca |
| 34 | **18F000001** | 1 | Tee | raccord T | T-Verbindungsstück | te | te |
| 35 | **19F000004** | 1 | Adapter | adaptateur | Zwischenstück | adaptador | adaptador |
| 36 | **23E000005** | 1 | Lockwasher | rondelle frein | Sicherungsscheibe | arruela de pressão | arandela seguridad |
| 37 | **24E000005** | 1 | Lockwasher | rondelle frein | Sicherungsscheibe | arruela de pressão | arandela seguridad |
| 38 | **24E000006** | 9 | Lockwasher | rondelle frein | Sicherungsscheibe | arruela de pressão | arandela seguridad |
| 39 | **24E000008** | 8 | Lockwasher | rondelle frein | Sicherungsscheibe | arruela de pressão | arandela seguridad |
| 40 | **83F000003** | 1 | Elbow | coude | Winkelrohr | cotovêlo | codo |
| 41 | **83F000004** | 3 | Elbow | coude | Winkelrohr | cotovêlo | codo |
| 42 | **83F000006** | 1 | Elbow | coude | Winkelrohr | cotovêlo | codo |
| 43 | **89F000003** | 1 | Fitting | ajustage | Verbindung | ajuste | accesorio |
| 44 | †○--------- | - | Fan belt | courr ventil | Treibrmn Vent | corr vent | corr vent |

[1] □500D-1553➡9999-CAC

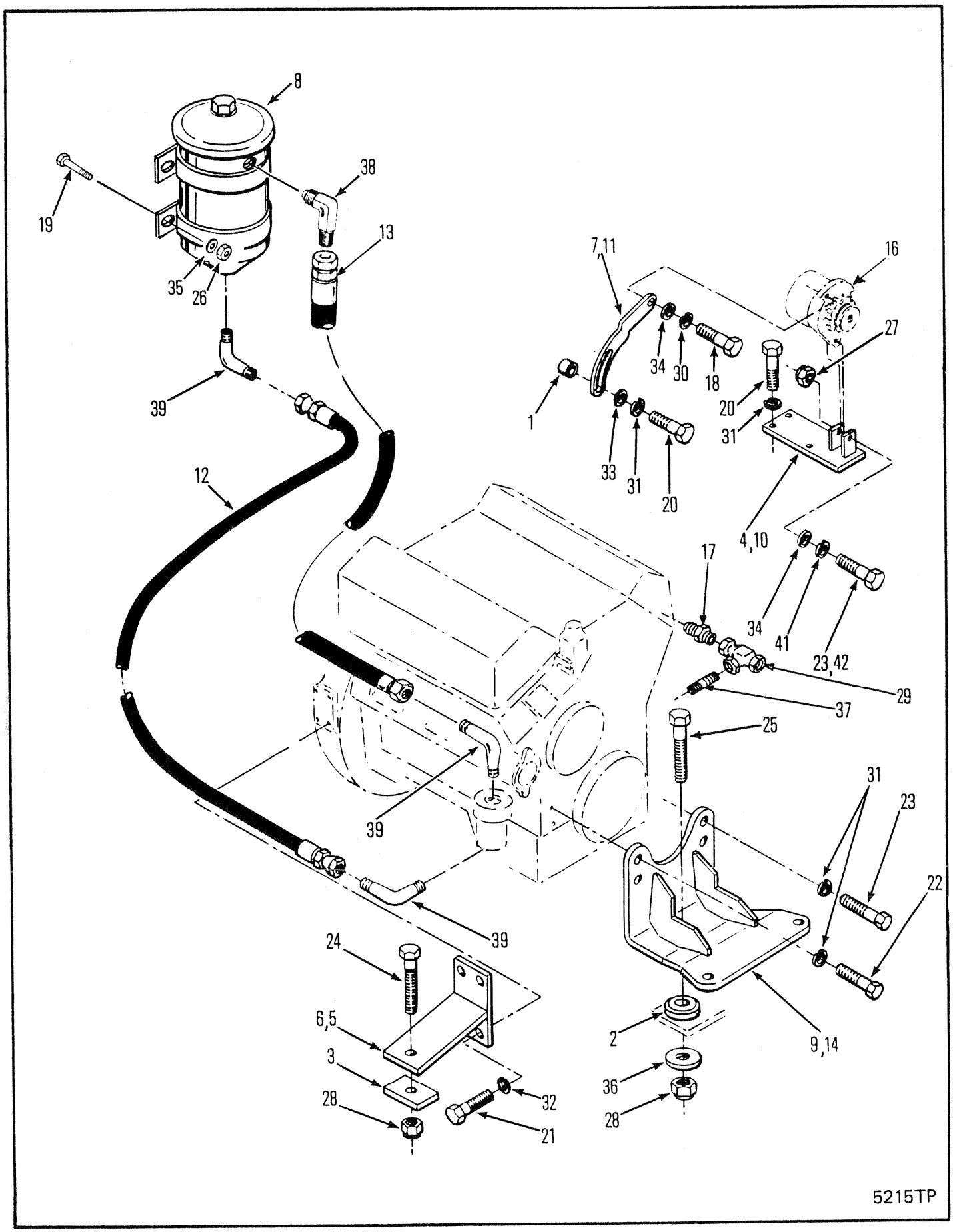
8
19
38
13
35
26
39
7,11
16
27
34
30
18
1
20
31
33
31
20
12
4,10
17
34
41
23,42
29
37
25
39
31
23
22
39
24
6,5
3
28
32
21
2
36
28
9,14
5215TP

# ENGINE MOUNTING & LUBRICATION
# MONTAGE ET LUBRIFICATION DU MOTEUR
# MOTORAUFBAU UND SCHMIERUNG
# MONTAGEM E LUBRICAÇÃO DO MOTOR
# MONTAJE DEL MOTOR Y LUBRICACIÓN

| No. | Part No. | Qty | Description | Description | Benennung | Descrição | Descripción |
|---|---|---|---|---|---|---|---|
| 1 | [2]209915 | 1 | Spacer | entretoise | Distanzteil | espaçador | espaciador |
| 2 | 524703 | 1 | Pad | tampon | Polster | almofada | almohadilla |
| 3 | 1900802 | 2 | Pad | tampon | Polster | almofada | almohadilla |
| 4 | 1902378 | 1 | Bracket | support | Winkel | grampo | grampa |
| 5 | 1904064 | 1 | Bracket | support | Winkel | grampo | grampa |
| 6 | 1904065 | 1 | Bracket | support | Winkel | grampo | grampa |
| 7 | 1906866 | 1 | Arm | bras | Arm | braço | brazo |
| 8 | ○--------- | - | Filter | filtre | filter | filtro | filtro |
| 9 | 1913817 | 1 | Bracket | support | Winkel | grampo | grampa |
| 10 | [2]1914232 | 1 | Bracket | support | Winkel | grampo | grampa |
| 11 | [2]1914233 | 1 | Arm | bras | Arm | braço | brazo |
| 12 | [1]1914824 | 1 | Hose | tuyau flexible | Schlauch | mangueira | manguera |
| 13 | 1914825 | 1 | Hose | tuyau flexible | Schlauch | mangueira | manguera |
| 14 | 1915191 | 1 | Front eng mount | montage de moteur | Vord Motorbefest | mont motor diant | mont motor del |
| 15 | †○--------- | - | Fan belt | courr ventil | Treibrmn Vent | corr vent | corr vent |
| 16 | ○--------- | - | Alternator | alternateur | Alternator | alternador | alternador |
| 17 | 5K000104 | 1 | Nipple | raccord | Nippel | niple | niple |
| 18 | 17C000514 | 1 | Bolt | boulon | Bolzen | parafuso | bulón |
| 19 | 17C000616 | 1 | Bolt | boulon | Bolzen | parafuso | bulón |
| 20 | 17C000620 | 5 | Bolt | boulon | Bolzen | parafuso | bulón |
| 21 | 17C000824 | 8 | Bolt | boulon | Bolzen | parafuso | bulón |
| 22 | 17C000832 | 2 | Bolt | boulon | Bolzen | parafuso | bulón |
| 23 | 17C000836 | 3 | Bolt | boulon | Bolzen | parafuso | bulón |
| 24 | 17C001032 | 2 | Bolt | boulon | Bolzen | parafuso | bulón |
| 25 | 17C001048 | 1 | Bolt | boulon | Bolzen | parafuso | bulón |
| 26 | 17D000003 | 1 | Nut | écrou | Mutter | porca | tuerca |
| 27 | 17D000006 | 1 | Nut | écrou | Mutter | porca | tuerca |
| 28 | 17D000009 | 3 | Nut | écrou | Mutter | porca | tuerca |
| 29 | 18F000001 | 1 | Tee | raccord T | T-Verbindungsstück | te | te |
| 30 | 23E000005 | 1 | Lockwasher | rondelle frein | Sicherungsscheibe | arruela de pressão | arandela seguridad |
| 31 | 24E000006 | 9 | Lockwasher | rondelle frein | Sicherungsscheibe | arruela de pressão | arandela seguridad |
| 32 | 24E000008 | 8 | Lockwasher | rondelle frein | Sicherungsscheibe | arruela de pressão | arandela seguridad |
| 33 | 25E000012 | 1 | Washer | rondelle | Scheibe | arruela | arandela |
| 34 | 25E000016 | 2 | Washer | rondelle | Scheibe | arruela | arandela |
| 35 | 25E000017 | 1 | Washer | rondelle | Scheibe | arruela | arandela |
| 36 | 25E000025 | 1 | Washer | rondelle | Scheibe | arruela | arandela |
| 37 | 38F000003 | 1 | Fitting | ajustage | Verbindung | ajuste | accesorio |
| 38 | 83F000004 | 1 | Elbow | coude | Winkelrohr | cotovêlo | codo |
| 39 | [1]83F000006 | 3 | Elbow | coude | Winkelrohr | cotovêlo | codo |
| 40 | †1919010 | 1 | Bracket | support | Winkel | grampo | grampa |
| 41 | 17C000005 | 1 | Lockwasher | rondelle frein | Sicherungsscheibe | arruela de pressão | arandela seguridad |
| 42 | [2]17C000840 | 1 | Bolt | boulon | Bolzen | parafuso | bulón |
| 43 | †○--------- | - | Alt belt | Courroie dalternateur | Alternatorriemen | Correia do alternador | Correa del alternador |

[1] Item 12 & 39 are serviced together
[1] L'entretien des articles 12 et 39 se fait en móme temps
[1] Pos. 12 & 39 werden gemeinsam gewartet
[1] A manutenção dos itens 12 e 39 é feita ao mesmo tempo
[1] Los articulos 12 & 39 son mantenidos juntos

[2] □500E-461-CAC&➡

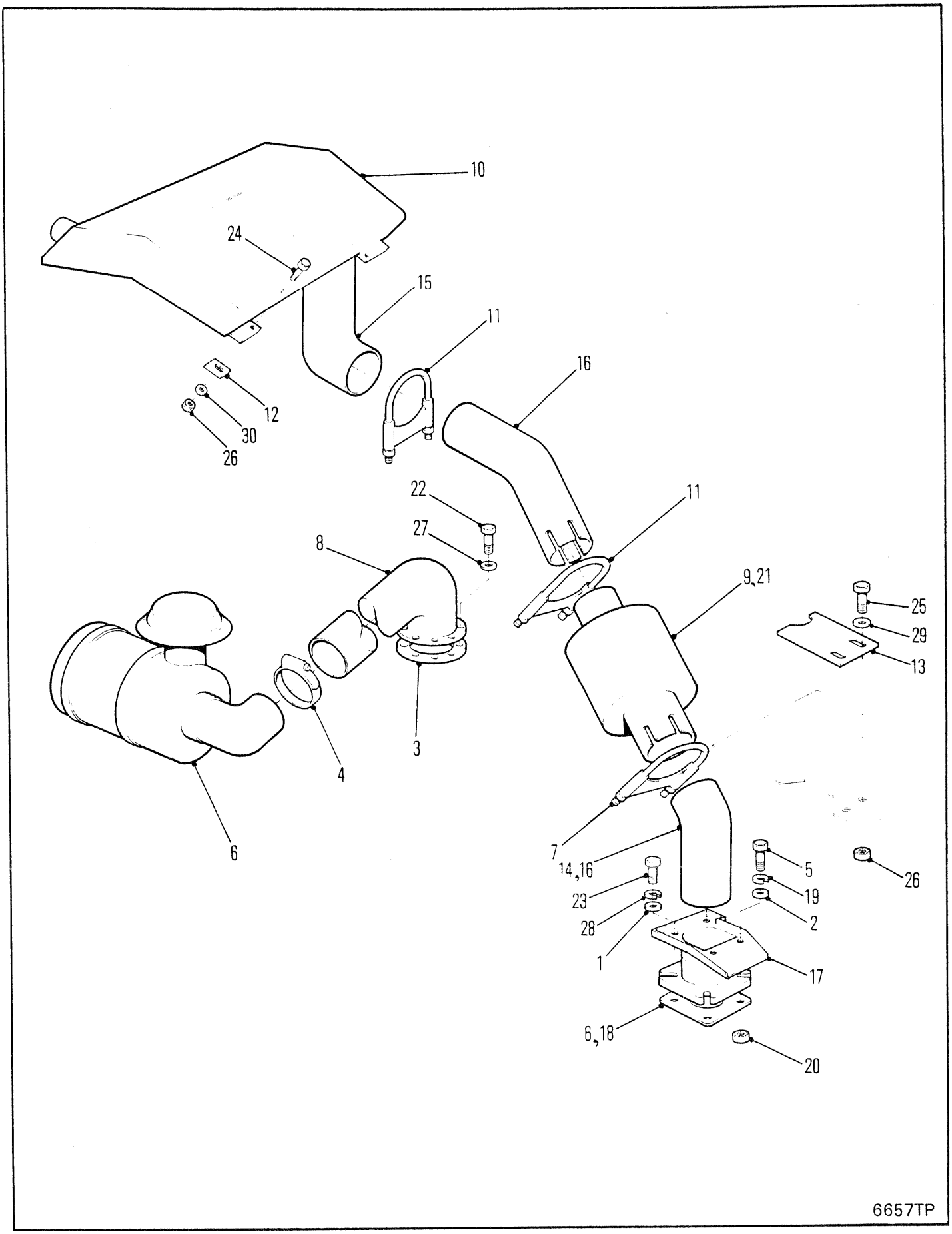
10
24
15
11
16
12
30
26
22
27
11
8
9,21
25
29
13
3
4
6
7
14,16
23
28
1
5
19
2
26
17
6,18
20
6657TP

# AIR CLEANER MUFFLER & MOUNTING
# FILTRE À AIR - SILENCIEUX & MONTAGE
# LUFTFILTER - AUSPUFFÄMPFER & MONTAGE
# AMORTECEDOR DO FILTRO DE AR & SUPORTE
# SILENCIADOR DEL FILTRO DE AIRE & SOPORTE

| No. | Part No. | Qty | Description | Description | Benennung | Descrição | Descripción |
|---|---|---|---|---|---|---|---|
| 1 | **209915** | 3 | Washer | rondelle | Scheibe | arruela | arandela |
| 2 | **215909** | 1 | Washer | rondelle | Scheibe | arruela | arandela |
| 3 | **527096** | 1 | Gasket | garniture | Dichtung | gaxeta | empaquetadura |
| 4 | **43H001450** | 1 | Clamp | pince | Schelle | braçadeira | abrazadera |
| 5 | **1304938** | 1 | Bolt | boulon | Bolzen | parafuso | bulón |
| 6 | O------- | 1 | Air cleaner | filtre à air | Luftfilter | purificador ar | depurador aire |
| 7 | **1901479** | 1 | Clamp | pince | Schelle | braçadeira | abrazadera |
| 8 | **1902041** | 1 | Tube | tube | Rohr | tubo | tubo |
| 9 | **1902490** | 1 | Spark arrester | pare-étincelles | Funkenfnger | para-faiscas | apagachispa |
| 10 | **1902842** | 1 | Muffler | silencieux | Auspufftopf | silenciador | silenciador |
| 11 | **1902848** | 2 | Clamp | pince | Schelle | braçadeira | abrazadera |
| 12 | **1902971** | 4 | Gasket | garniture | Dichtung | gaxeta | empaquetadura |
| 13 | [1]**1906452** | 1 | Cover | couvercle | Deckel | tampa | tapa |
| 14 | **1906454** | 1 | Flange | flange | Flansch | bride | brida |
| 15 | **1902835** | 1 | Tube | tube | Rohr | tubo | tubo |
| 16 | **1906456** | 1 | Exhaust tube | tuyau déchappement | Auspuffrohr | tubo de exaustão | cano de escape |
| 17 | [1]**1909003** | 1 | Debris shield | ecran de débris | Schutzschild | abrigo de esc | resg deshechos |
| 18 | **1990270** | 1 | Gasket | garniture | Dichtung | gaxeta | empaquetadura |
| 19 | **4E000006** | 1 | Lockwasher | rondelle frein | Sicherungsscheibe | arruela de pressão | arandela seguridad |
| 20 | **7D000006** | 1 | Nut | écrou | Mutter | porca | tuerca |
| 21 | †**13F000006** | 1 | Plug | bouchon | Stopfen | bujão | tapón |
| 22 | **17C000514** | 4 | Bolt | boulon | Bolzen | parafuso | bulón |
| 23 | **17C000620** | 3 | Bolt | boulon | Bolzen | parafuso | bulón |
| 24 | **17C000824** | 8 | Bolt | boulon | Bolzen | parafuso | bulón |
| 25 | **17C000412** | 2 | Bolt | boulon | Bolzen | parafuso | bulón |
| 26 | **17D000001** | 2 | Nut | écrou | Mutter | porca | tuerca |
| 27 | **24E000005** | 4 | Lockwasher | rondelle frein | Sicherungsscheibe | arruela de pressão | arandela seguridad |
| 28 | **24E000006** | 3 | Lockwasher | rondelle frein | Sicherungsscheibe | arruela de pressão | arandela seguridad |
| 29 | **25E000013** | 2 | Washer | rondelle | Scheibe | arruela | arandela |
| 30 | **25E000021** | 4 | Washer | rondelle | Scheibe | arruela | arandela |

[1] □513E-101➡790-CAC

666GM 513E-101-CAC➡513G-9999-CAC
666GMGR 515A-101-CAC➡515A-9999-CAC

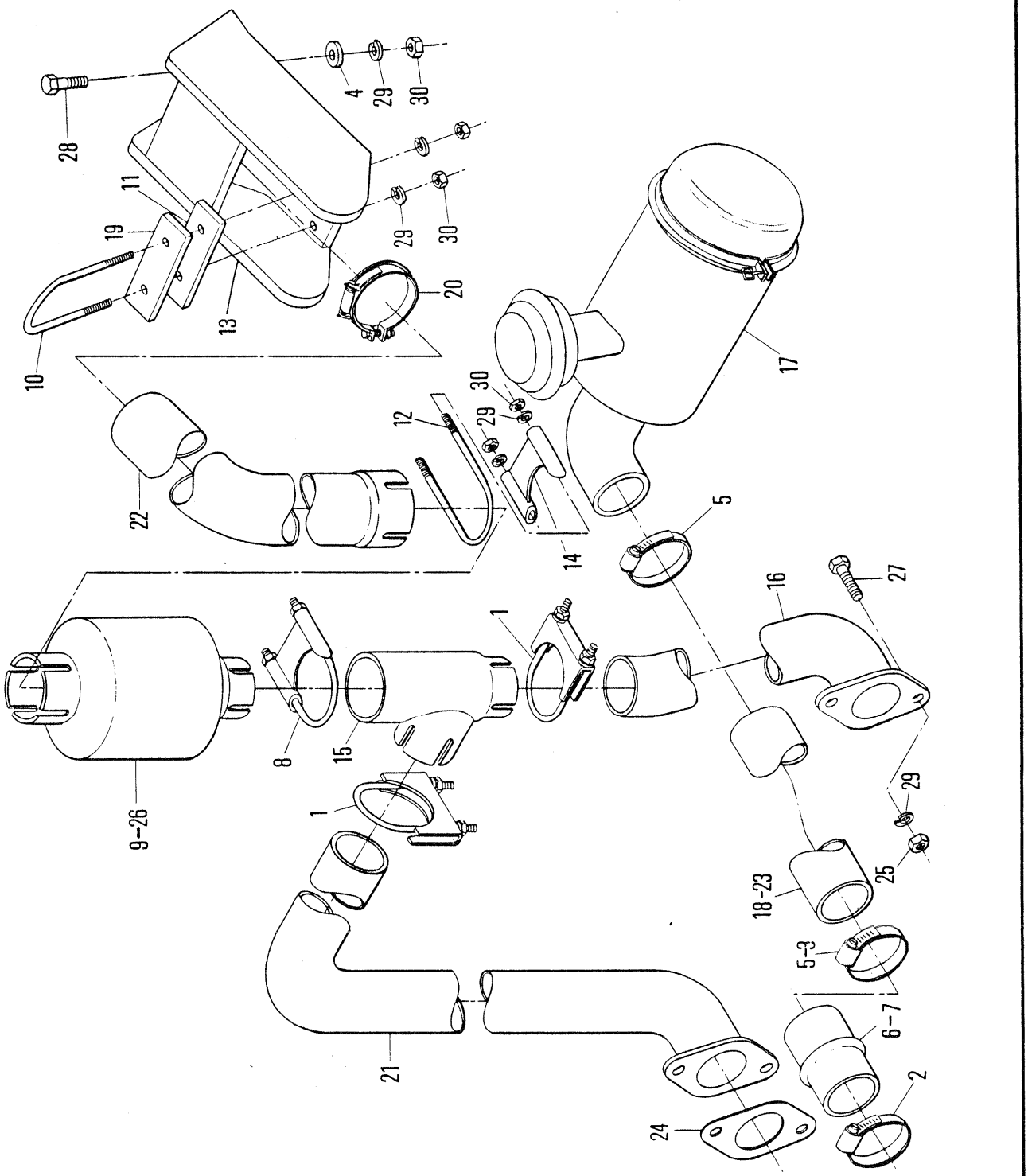
5154TP
4
29
30
28
11
19
29
30
20
13
10
17
30
29
12
22
14
5
16
27
1
8
15
1
9-26
29
25
18-23
5-3
6-7
21
2
24

# AIR CLEANER MUFFLER & MOUNTING
# FILTRE À AIR - SILENCIEUX & MONTAGE
# LUFTFILTER - AUSPUFFÄMPFER & MONTAGE
# AMORTECEDOR DO FILTRO DE AR & SUPORTE
# SILENCIADOR DEL FILTRO DE AIRE & SOPORTE

| No. | Part No. | Qty | Description | Description | Benennung | Descrição | Descripción |
|---|---|---|---|---|---|---|---|
| 1 | **507068** | 2 | Clamp | pince | Schelle | braçadeira | abrazadera |
| 2 | **522633** | 1 | Clamp | pince | Schelle | braçadeira | abrazadera |
| 3 | **43H001450** | 1 | Clamp | pince | Schelle | braçadeira | abrazadera |
| 4 | **664871** | 1 | Washer | rondelle | Scheibe | arruela | arandela |
| 5 | [1]**942792** | 2 | Clamp | pince | Schelle | braçadeira | abrazadera |
| 6 | [1]**1522449** | 1 | Hose | tuyau flexible | Schlauch | mangueira | manguera |
| 7 | **1632459** | 1 | Hose | tuyau flexible | Schlauch | mangueira | manguera |
| 8 | **1901479** | 1 | Clamp | pince | Schelle | braçadeira | abrazadera |
| 9 | **1901766** | 1 | Spark arrester | pare-étincelles | Funkenfnger | para-faiscas | apagachispa |
| 10 | **1901852** | 1 | U-bolt | boulon U | U-Bolzen | cavilha U | bulón U |
| 11 | **1901854** | 1 | Spacer | entretoise | Distanzteil | espaçador | espaciador |
| 12 | **1901856** | 1 | U-bolt | boulon U | U-Bolzen | cavilha U | bulón U |
| 13 | **1901859** | 1 | Guard | protecteur | Schutz | proteção | protector |
| 14 | **1902064** | 1 | Clamp | pince | Schelle | braçadeira | abrazadera |
| 15 | **1902188** | 1 | Connector | raccord | Verbindungsstück | ligador | conector |
| 16 | **1902190** | 1 | Exhaust pipe | tuyau déchappement | Auspuffrohr | cano de descarga | cao de escape |
| 17 | ○**3677384** | 1 | Air cleaner assy | filtre à air, ens | Luftfilter, vollst | purificador ar conj | depurador aire conj |
| 18 | [1]**1902374** | 1 | Tube | tube | Rohr | tubo | tubo |
| 19 | **1902612** | 1 | Flat | méplat | Fläche | bloco plano | planchuela |
| 20 | **1902719** | 1 | Rain cap | capuchon deau | Regenkappe | coberta p/chuva | tapa p/lluvia |
| 21 | [1]**1904221** | 1 | Exhaust pipe | tuyau déchappement | Auspuffrohr | cano de descarga | cao de escape |
| 22 | **1904422** | 1 | Exhaust pipe | tuyau déchappement | Auspuffrohr | cano de descarga | cao de escape |
| 23 | **1907884** | 1 | Tube | tube | Rohr | tubo | tubo |
| 24 | **1990274** | 2 | Gasket | garniture | Dichtung | gaxeta | empaquetadura |
| 25 | **7D000006** | 4 | Nut | écrou | Mutter | porca | tuerca |
| 26 | †**13F000012** | 1 | Plug | bouchon | Stopfen | bujão | tapón |
| 27 | **17C000624** | 4 | Bolt | boulon | Bolzen | parafuso | bulón |
| 28 | **17C000628** | 1 | Bolt | boulon | Bolzen | parafuso | bulón |
| 29 | **24E000006** | 9 | Lockwasher | rondelle frein | Sicherungsscheibe | arruela de pressão | arandela seguridad |
| 30 | **63D000006** | 5 | Nut | écrou | Mutter | porca | tuerca |

[1] □500D-101CAC➡1222-CAC

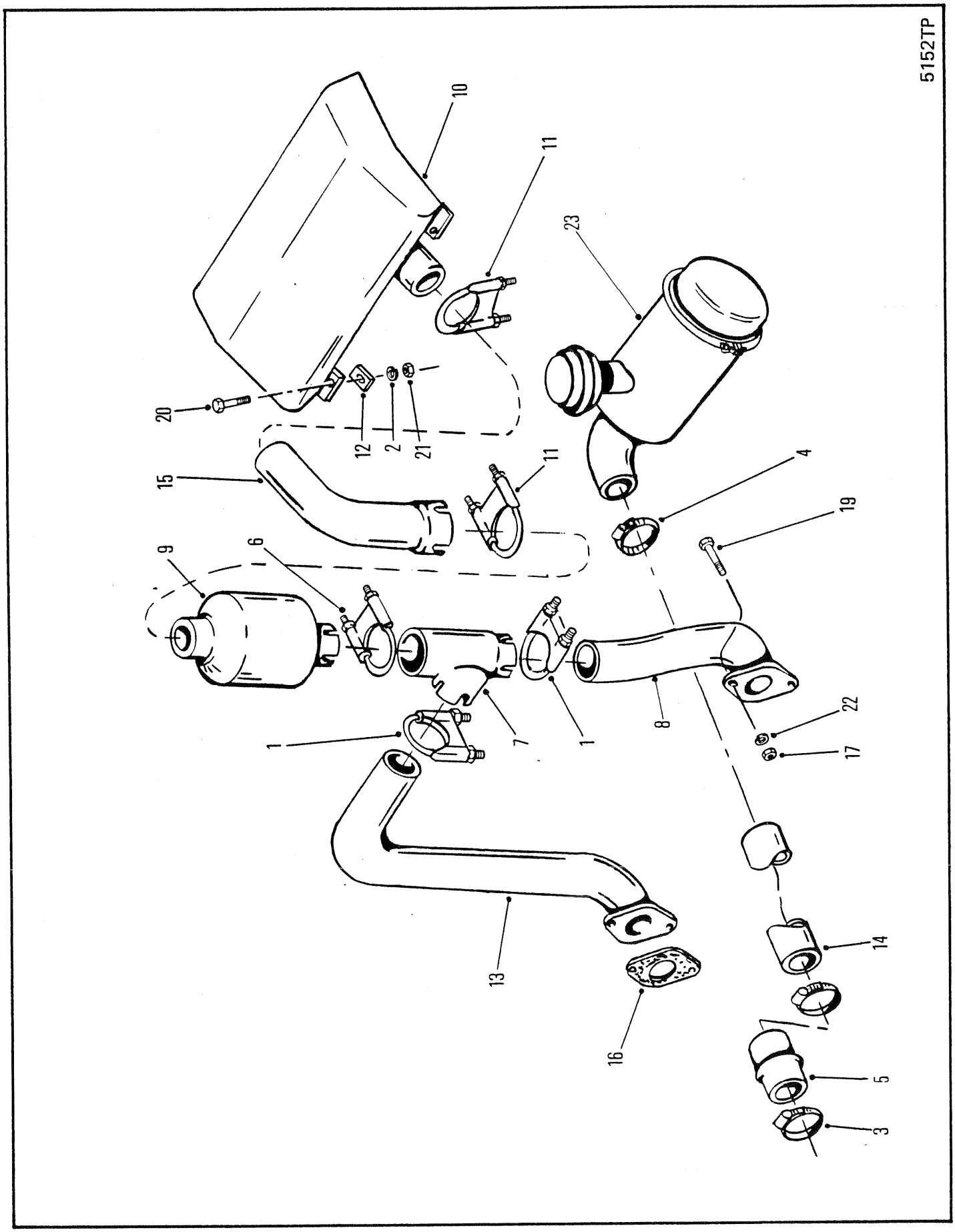
5152TP
10
11
23
20
12
2
21
15
11
4
19
9
6
1
7
1
8
22
17
13
16
14
5
3

# AIR CLEANER MUFFLER & MOUNTING
# FILTRE À AIR - SILENCIEUX & MONTAGE
# LUFTFILTER - AUSPUFFÄMPFER UND MONTAGE
# AMORTECEDOR DO FILTRO DE AR E SUPORTE
# SILENCIADOR DEL FILTRO DE AIRE Y SOPORTE

| No. | Part No. | Qty | Description | Description | Benennung | Descrição | Descripción |
|---|---|---|---|---|---|---|---|
| 1 | **507068** | 2 | Clamp | pince | Schelle | braçadeira | abrazadera |
| 2 | **25E000021** | 4 | Washer | rondelle | Scheibe | arruela | arandela |
| 3 | **540102** | 1 | Clamp | pince | Schelle | braçadeira | abrazadera |
| 4 | **942792** | 1 | Clamp | pince | Schelle | braçadeira | abrazadera |
| 5 | **1632459** | 1 | Hose | tuyau flexible | Schlauch | mangueira | manguera |
| 6 | **1901479** | 1 | Clamp | pince | Schelle | braçadeira | abrazadera |
| 7 | **1902188** | 1 | Tee | raccord T | T-Verbindungsstück | te | te |
| 8 | **1902190** | 1 | Exhaust pipe | tuyau déchappement | Auspuffrohr | cano de descarga | cao de escape |
| 9 | **1902490** | 1 | Spark arrester | pare-étincelles | Funkenfnger | para-faiscas | apagachispa |
| 10 | **1902842** | 1 | Muffler | silencieux | Auspufftopf | silenciador | silenciador |
| 11 | **1902848** | 2 | Clamp | pince | Schelle | braçadeira | abrazadera |
| 12 | **1902971** | 4 | Gasket | garniture | Dichtung | gaxeta | empaquetadura |
| 13 | **1907879** | 1 | Exhaust pipe | tuyau déchappement | Auspuffrohr | cano de descarga | cao de escape |
| 14 | **1907884** | 1 | Tube | tube | Rohr | tubo | tubo |
| 15 | **1907996** | 1 | Tail pipe | tuyau déchappement | auspuffrohr | cano escape | cao escape |
| 16 | **1990274** | 2 | Gasket | garniture | Dichtung | gaxeta | empaquetadura |
| 17 | **7D000006** | 4 | Nut | écrou | Mutter | porca | tuerca |
| 18 | †**13F000006** | 1 | Plug | bouchon | Stopfen | bujão | tapón |
| 19 | **17C000624** | 4 | Bolt | boulon | Bolzen | parafuso | bulón |
| 20 | **17C000824** | 4 | Bolt | boulon | Bolzen | parafuso | bulón |
| 21 | **17D000006** | 4 | Nut | écrou | Mutter | porca | tuerca |
| 22 | **24E000006** | 4 | Lockwasher | rondelle frein | Sicherungsscheibe | arruela de pressão | arandela seguridad |
| 23 | ○--------- | 1 | Air cleaner | filtre à air | Luftfilter | purificador ar | depurador aire |

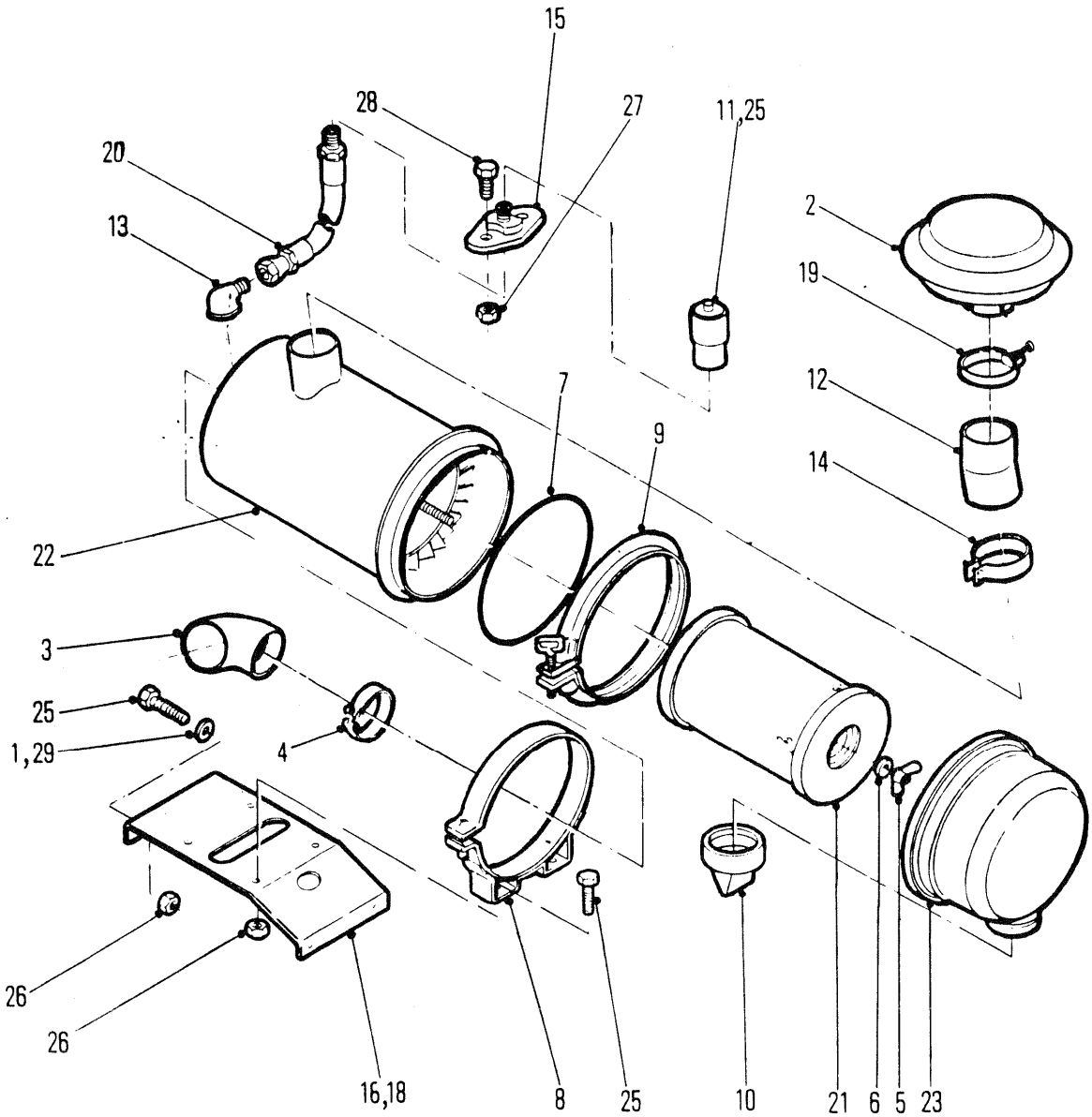
15
28
27
11,25
20
13
2
19
12
14
7
9
22
3
25
1,29
4
26
26
16,18
8
25
10
21
6
5
23

5230TP

# AIR CLEANER
# EPURATEUR D'AIR
# LUFTFILTER
# FILTRO DE AR
# FILTRO DEL AIRE

| No. | Part No. | Qty | Description | Description | Benennung | Descrição | Descripción |
|---|---|---|---|---|---|---|---|
| A | [1]1901718 | 1 | Air cleaner | filtre à air | Luftfilter | purificador ar | depurador aire |
| 1 | 103293 | 4 | Washer | rondelle | Scheibe | arruela | arandela |
| 2 | [5]511512 | 1 | Cap | chapeau | Kappe | tampa | tapa |
| 3 | 1902171 | 2 | Elbow | coude | Winkelrohr | cotovêlo | codo |
| 4 | 43H001450 | 1 | Clamp | pince | Schelle | braçadeira | abrazadera |
| 5 | 886526 | 1 | Nut | écrou | Mutter | porca | tuerca |
| 6 | 886527 | 1 | Gasket | garniture | Dichtung | gaxeta | empaquetadura |
| 7 | 892833 | 1 | O-ring | joint torique | O Ring | anel-O | anillo-O |
| 8 | 941474 | 2 | Band | bande | Band | banda | banda |
| 9 | 945060 | 1 | Clamp | pince | Schelle | braçadeira | abrazadera |
| 10 | 946860 | 1 | Valve,vacuator | soupape exhausteur | Ventilabfluss | válvula evacuação | válvula e |
| 11 | [3]1529625 | 1 | Indicator assy | indicateur ens | Messer vollst | indicador conj | indicador conj |
| 12 | 1901701 | 1 | Tube,extension | exten de conduite | Schlauchverlanger | extensao do tubo | extension tubo |
| 13 | 85F000004 | 1 | Fitting | ajustage | Verbindung | ajuste | accesorio |
| 14 | 1901722 | 1 | Clamp | pince | Schelle | braçadeira | abrazadera |
| 15 | 1901972 | 1 | Flange | bride | Flansch | flange | brida |
| 16 | 1902030 | 1 | Mount | support | Befestigung | apoio | montura |
| 17 | [6]†1906507 | 1 | Screen | crible | Sieb | tela | tamiz |
| 18 | 1915075 | 1 | Mount | support | Befestigung | apoio | montura |
| 19 | [4]§--------- | 1 | Clamp | pince | Schelle | braçadeira | abrazadera |
| 20 | 1917182 | 1 | Hose | tuyau flexible | Schlauch | mangueira | manguera |
| 21 | 1990248 | 1 | Element,filter | élément filtre | Filtereinsatz | elemento filtro | elemento filtro |
| 22 | 1990249 | 1 | Body | carrosserie | Karosserie | carroçria | carrocería |
| 23 | 1990250 | 1 | Cup | cuvette | Schale | capa | cubeta |
| 24 | [2]6515007 | 1 | Indicator assy | indicateur ens | Messer vollst | indicador conj | indicador conj |
| 25 | 17C000616 | 8 | Bolt | boulon | Bolzen | parafuso | bulón |
| 26 | 17D000003 | 8 | Nut | écrou | Mutter | porca | tuerca |
| 27 | 18D000004 | 2 | Nut | écrou | Mutter | porca | tuerca |
| 28 | 18C000412 | 2 | Bolt | boulon | Bolzen | parafuso | bulón |
| 29 | 25E000017 | 4 | Washer | rondelle | Scheibe | arruela | arandela |

[1] Inc 5➞7, 9, 10 & 21➞23

[2] CUM

[3] GM

[4] See 2
[4] Voir 2
[4] Siehe 2
[4] Veja 2
[4] Véase 2

[5] Inc. 19

[6] ☐ Soundproof machines only.
[6] ☐ Machines insonorisées seulement
[6] ☐ Nur für Maschinen mit Schallabdichtung
[6] ☐ Motores de isolação acústica
[6] ☐ Máquinas insonorizadas solamente

666CUM 500D-101-CAC➞500G-9999-CAC
666GM 513E-101-CAC➞513G-9999-CAC 526A-101-CAC➞526A-9999-CAC
666GMGR 515A-101-CAC➞515A-9999-CAC

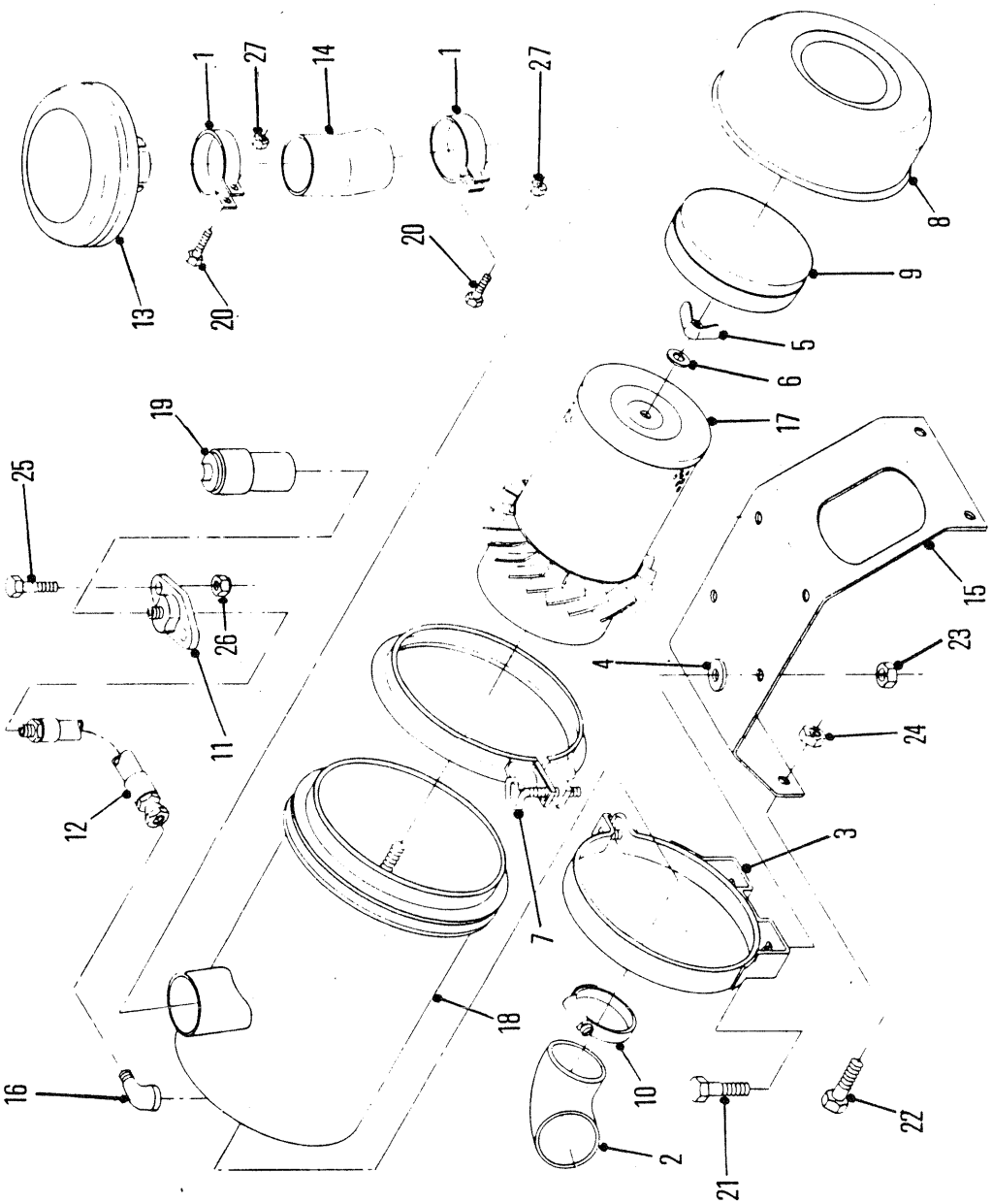
5277TP
1
27
14
1
27
13
20
20
9
8
5
6
17
19
25
15
26
23
4
11
24
12
3
7
18
16
10
22
2
21

# AIR CLEANER
# EPURATEUR D'AIR
# LUFTFILTER
# FILTRO DE AR
# FILTRO DEL AIRE

| No. | Part No. | Qty | Description | Description | Benennung | Descrição | Descripción |
|---|---|---|---|---|---|---|---|
| A | [1]3677384 | 1 | Air cleaner assy | filtre à air, ens | Luftfilter, vollst | purificador ar conj | depurador aire conj |
| 1 | 527170 | 2 | Clamp | pince | Schelle | braçadeira | abrazadera |
| 2 | 547013 | 1 | Elbow | coude | Winkelrohr | cotovêlo | codo |
| 3 | 551660 | 2 | Band | bande | Band | banda | banda |
| 4 | 616781 | 4 | Spacer | entretoise | Distanzteil | espaçador | espaciador |
| 5 | 886526 | 1 | Nut | écrou | Mutter | porca | tuerca |
| 6 | 886527 | 1 | Gasket | garniture | Dichtung | gaxeta | empaquetadura |
| 7 | 886570 | 1 | Clamp | pince | Schelle | braçadeira | abrazadera |
| 8 | 891327 | 1 | Cup assy | cuvette ens | Schale vollst | capa conj | cubeta conj |
| 9 | 891328 | 1 | Baffle | déflecteur | Deflektor | defletor | deflector |
| 10 | 942792 | 1 | Clamp | pince | Schelle | braçadeira | abrazadera |
| 11 | 1901972 | 1 | Flange | flange | Flansch | bride | brida |
| 12 | 1902059 | 1 | Hose | tuyau flexible | Schlauch | mangueira | manguera |
| 13 | [2]1902214 | 1 | Cap | chapeau | Kappe | tampa | tapa |
| 14 | 1902216 | 1 | Tube | tube | Rohr | tubo | tubo |
| 15 | 1902219 | 1 | Mount | support | Befestigung | apoio | montura |
| 16 | 85F000004 | 1 | Elbow | coude | Winkelrohr | cotovêlo | codo |
| 17 | 1990272 | 1 | Element | elément | Element | elemento | elemento |
| 18 | 1990273 | 1 | Body | carrosserie | Karosserie | carroçria | carrocería |
| 19 | 6515007 | 1 | Indicator | indicateur | Messer | indicador | indicador |
| 20 | 17C000420 | 2 | Bolt | boulon | Bolzen | parafuso | bulón |
| 21 | 17C000512 | 4 | Bolt | boulon | Bolzen | parafuso | bulón |
| 22 | 17C000616 | 4 | Bolt | boulon | Bolzen | parafuso | bulón |
| 23 | 17D000002 | 4 | Nut | écrou | Mutter | porca | tuerca |
| 24 | 17D000003 | 4 | Nut | écrou | Mutter | porca | tuerca |
| 25 | 18C000416 | 2 | Bolt | boulon | Bolzen | parafuso | bulón |
| 26 | 18D000004 | 2 | Nut | écrou | Mutter | porca | tuerca |
| 27 | 63D000004 | 2 | Nut | écrou | Mutter | porca | tuerca |

[1] Inc 5➡9, 17 & 18

[2] Inc 1, 20 & 27

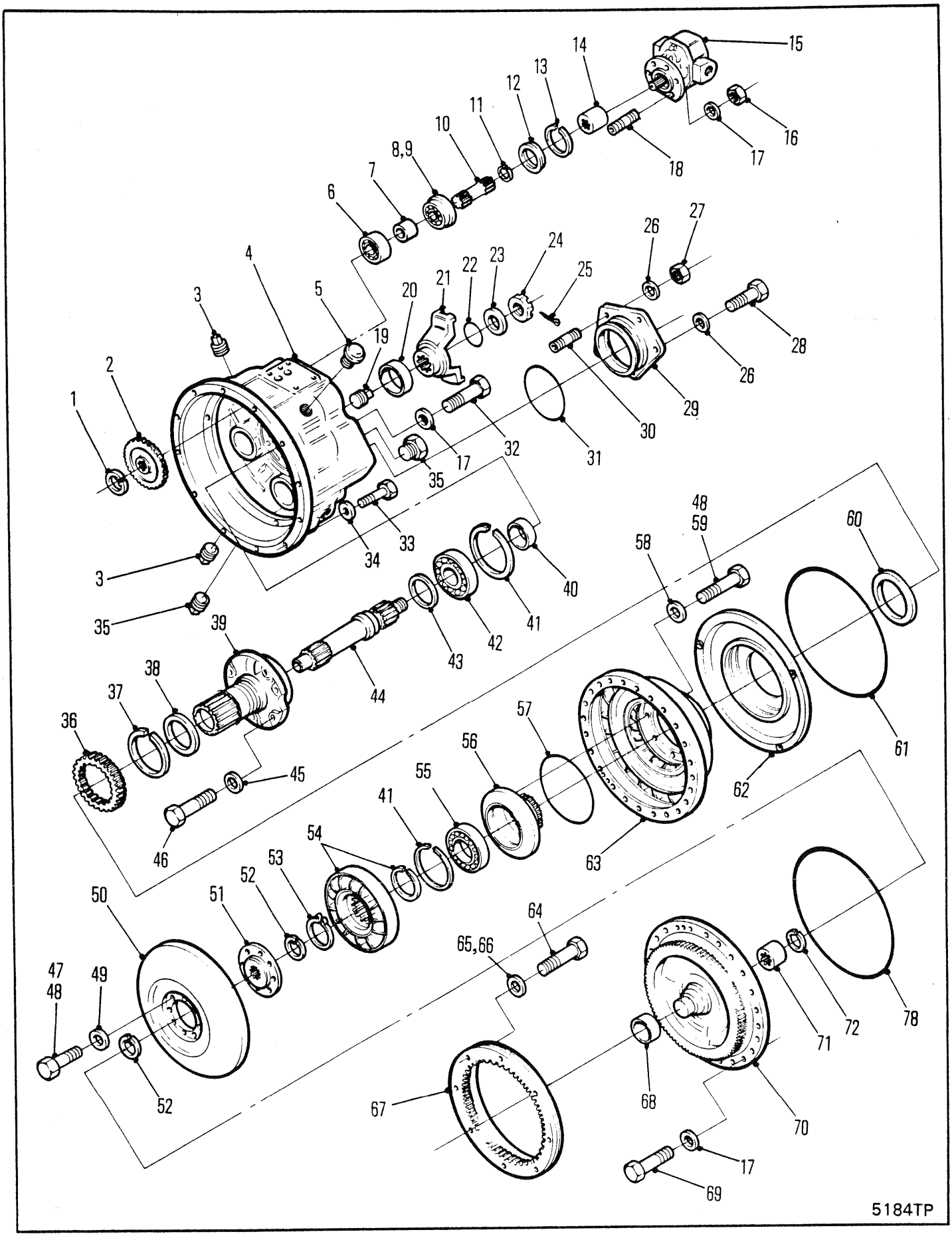
1
2
3
4
5
6
7
8,9
10
11
12
13
14
15
16
17
18
19
20
21
22
23
24
25
26
27
28
29
30
31
32
33
34
35
36
37
38
39
40
41
42
43
44
45
46
47
48
49
50
51
52
53
54
55
56
57
58
59
60
61
62
63
64
65,66
67
68
69
70
71
72
78
5184TP

# CONVERTER ASSEMBLY
# CONVERTISSEUR, ENSEMBLE
# DREHMOMENTWANDLER, VOLLSTÄNDIG
# CONVERSOR, CONJUNTO
# CONVERTIDOR, CONJUNTO

| No. | Part No. | Qty | Description | Description | Benennung | Descrição | Descripción |
|---|---|---|---|---|---|---|---|
| A | [1]282731 | 1 | Torque conv assy | ens conv couple | Drehmomentwndlr voll | conj conv torque | conj conv par |
| 1 | 711298 | 2 | Snap ring | circlips | Sperring | anel de trava | anillo de retención |
| 2 | 214931 | 2 | Gear pump drive | pompe dentr pign | Pumpenantriebsrad | acion bomba engr | engr bomba prop |
| 3 | 13F000016 | 3 | Plug | bouchon | Stopfen | bujão | tapón |
| 4 | 214981 | 1 | Housing assy | boitier ens | Gehuse vollst | carcaça conj | carcasa conj |
| 5 | 233598 | 1 | Breather | reniflard | Entlüfter | respiradouro | respiradero |
| 6 | 214936 | 2 | Bearing | palier | Lager | mancal | cojinete |
| 7 | 214930 | 2 | Spacer | entretoise | Distanzteil | espaçador | espaciador |
| 8 | 214954 | 2 | Snap ring | circlips | Sperring | anel de trava | anillo de retención |
| 9 | 214956 | 2 | Bearing | palier | Lager | mancal | cojinete |
| 10 | 214928 | 2 | Drive shaft | arbre moteur | Gelenkwelle | eixo propulsor | árbol impulsor |
| 11 | 224039 | 2 | Snap ring | circlips | Sperring | anel de trava | anillo de retención |
| 12 | 214929 | 2 | Washer | rondelle | Scheibe | arruela | arandela |
| 13 | 713186 | 2 | Snap ring | circlips | Sperring | anel de trava | anillo de retención |
| 14 | 214961 | 1 | Sleeve | manchon | Muffe | luva | manguito |
| 15 | 450230 | 1 | Charging pump | pompe de chargemnt | Ladepumpe | bomba de carga | bomba de carga |
| 16 | 8D000006 | 6 | Nut | écrou | Mutter | porca | tuerca |
| 17 | 4E000006 | 33 | Lockwasher | rondelle frein | Sicherungsscheibe | arruela de pressão | arandela seguridad |
| 18 | 207647 | 6 | Stud | goujon | Stift | prisioneiro | espárrago |
| 19 | 16F000008 | 2 | Plug | bouchon | Stopfen | bujão | tapón |
| 20 | 206864 | 1 | Seal oil | jnt étanchéité huile | Idichtung | vedação de óleo | sello de aceite |
| 21 | 215702 | 1 | Flange,output | bride sortie | Flansche Ausgangs | flange saida | platina salida |
| 22 | 25K040112 | 1 | O-ring | joint torique | O Ring | anel-O | anillo-O |
| 23 | 102745 | 1 | Washer | rondelle | Scheibe | arruela | arandela |
| 24 | 201951 | 1 | Nut | écrou | Mutter | porca | tuerca |
| 25 | 1F000424 | 1 | Pin | goupille | Stift | pino | pasador |
| 26 | 4E000007 | 5 | Lockwasher | rondelle frein | Sicherungsscheibe | arruela de pressão | arandela seguridad |
| 27 | 8D000007 | 2 | Nut | écrou | Mutter | porca | tuerca |
| 28 | 1C000720 | 3 | Screw | vis | Schraube | parafuso | tornillo |
| 29 | 214979 | 1 | Cover | couvercle | Deckel | tampa | tapa |
| 30 | 214730 | 2 | Stud | goujon | Stift | prisioneiro | espárrago |
| 31 | 25K040512 | 1 | O-ring | joint torique | O Ring | anel-O | anillo-O |
| 32 | 1C000628 | 3 | Screw | vis | Schraube | parafuso | tornillo |
| 33 | 17C000620 | 12 | Bolt | boulon | Bolzen | parafuso | bulón |
| 34 | 24E000006 | 12 | Lockwasher | rondelle frein | Sicherungsscheibe | arruela de pressão | arandela seguridad |
| 35 | 40K000002 | 3 | Plug | bouchon | Stopfen | bujão | tapón |
| 36 | 214951 | 1 | Gear | engrenage | Zahnrad | engrenagem | engranaje |
| 37 | 224009 | 1 | Snap ring | circlips | Sperring | anel de trava | anillo de retención |
| 38 | 221653 | 1 | Piston ring | segment de piston | Kolbenring | anel do pistão | aro del pistón |
| 39 | 237405 | 1 | Stator | stator | Stator | estator | estator |
| 40 | 214984 | 1 | Spacer | entretoise | Distanzteil | espaçador | espaciador |
| 41 | 214953 | 2 | Snap ring | circlips | Sperring | anel de trava | anillo de retención |
| 42 | 239742 | 1 | Bearing | palier | Lager | mancal | cojinete |
| 43 | 222079 | 1 | Piston ring | segment de piston | Kolbenring | anel do pistão | aro del pistón |
| 44 | 214983 | 1 | Shaft | arbre | Welle | ávore | árbol |
| 45 | 7E000008 | 6 | Lockwasher | rondelle frein | Sicherungsscheibe | arruela de pressão | arandela seguridad |

[1] Inc 1➡63 & 68➡78

[2] Inc 68 & 70

[3] See 77
[3] Voir 77
[3] Siehe 77
[3] Veja 77
[3] Véase 77

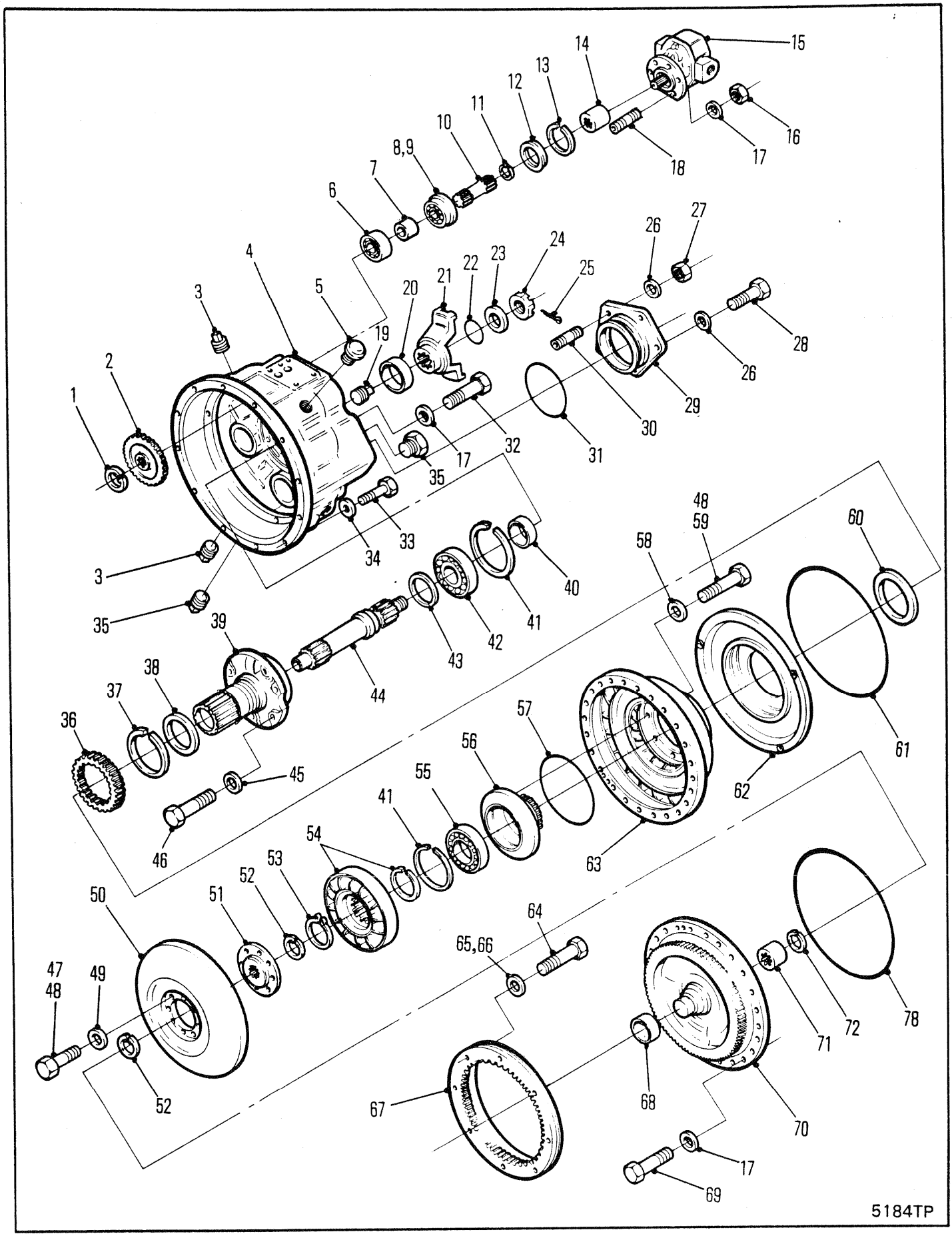
1
2
3
4
5
6
7
8,9
10
11
12
13
14
15
16
17
18
19
20
21
22
23
24
25
26
27
28
29
30
31
32
33
34
35
36
37
38
39
40
41
42
43
44
45
46
47
48
49
50
51
52
53
54
55
56
57
58
59
60
61
62
63
64
65,66
67
68
69
70
71
72
78
5184TP

## CONVERTER ASSEMBLY
## CONVERTISSEUR, ENSEMBLE
## DREHMOMENTWANDLER, VOLLSTÄNDIG
## CONVERSOR, CONJUNTO
## CONVERTIDOR, CONJUNTO

| No. | Part No. | Qty | Description | Description | Benennung | Descrição | Descripción |
|---|---|---|---|---|---|---|---|
| 46 | 1C000820 | 6 | Screw | vis | Schraube | parafuso | tornillo |
| 47 | 209313 | 8 | Screw | vis | Schraube | parafuso | tornillo |
| 48 | 28H000018 | 9 | Lockwire | fil blocage | Sicherungsdraht | fio segurança | alambre seguridad |
| 49 | 619023 | 1 | Washer | rondelle | Scheibe | arruela | arandela |
| 50 | 222684 | 1 | Turbine | turbine | Turbine | turbina | turbina |
| 51 | 214924 | 1 | Hub | moyeu | Nabe | cubo | cubo |
| 52 | 659065 | 2 | Snap ring | circlips | Sperring | anel de trava | anillo de retención |
| 53 | 743035 | 1 | Snap ring | circlips | Sperring | anel de trava | anillo de retención |
| 54 | 801607 | 1 | Reaction member | stator | Stator | estator | Estator |
| 55 | 214596 | 1 | Bearing | palier | Lager | mancal | cojinete |
| 56 | 214923 | 1 | Hub | moyeu | Nabe | cubo | cubo |
| 57 | 25K040616 | 1 | O-ring | joint torique | O Ring | anel-O | anillo-O |
| 58 | 619025 | 8 | Lockwasher | rondelle frein | Sicherungsscheibe | arruela de pressão | arandela seguridad |
| 59 | 4C000714 | 8 | Screw | vis | Schraube | parafuso | tornillo |
| 60 | 214941 | 1 | Seal oil | jnt étanchéité huile | Idichtung | vedação de óleo | sello de aceite |
| 61 | 214939 | 1 | Quad ring | anneau quadruple | Viererring | anel guad | anillo bastidor |
| 62 | 214925 | 1 | Oil baffle | déflecteur huile | Ideflektor | defletor óleo | deflector aceite |
| 63 | 214920 | 1 | Impeller | impulseur | Pumprad | impulsor | impulsor |
| 64 | 233092 | 16 | Bolt | boulon | Bolzen | parafuso | bulón |
| 65 | 215909 | 16 | Washer | rondelle | Scheibe | arruela | arandela |
| 66 | 28H014160 | 1 | Lockwire | fil blocage | Sicherungsdraht | fio segurança | alambre seguridad |
| 67 | 233089 | 1 | Ring gear | couronne dentée | Zahnkranz | corõa | corona |
| 68 | [3]222006 | 1 | Sleeve | manchon | Muffe | luva | manguito |
| 69 | 1C000616 | 24 | Bolt | boulon | Bolzen | parafuso | bulón |
| 70 | [3]§-------- | 1 | Cover | couvercle | Deckel | tampa | tapa |
| 71 | 214988 | 1 | Bearing | palier | Lager | mancal | cojinete |
| 72 | 666542 | 1 | Snap ring | circlips | Sperring | anel de trava | anillo de retención |
| 73 | †207873 | 2 | Screw | vis | Schraube | parafuso | tornillo |
| 74 | †220725 | 1 | Name plate | plaque duconstructr | Namensschild | placa do nome | placa de nombre |
| 75 | †223124 | 1 | Cover | couvercle | Deckel | tampa | tapa |
| 76 | †223125 | 1 | Gasket | garniture | Dichtung | gaxeta | empaquetadura |
| 77 | [2]†801524 | 1 | Cover | couvercle | Deckel | tampa | tapa |
| 78 | 232535 | 1 | Quad ring | anneau quadruple | Viererring | anel guad | anillo bastidor |

[1] Inc 1➡63 & 68➡78

[2] Inc 68 & 70

[3] See 77
[3] Voir 77
[3] Siehe 77
[3] Veja 77
[3] Véase 77

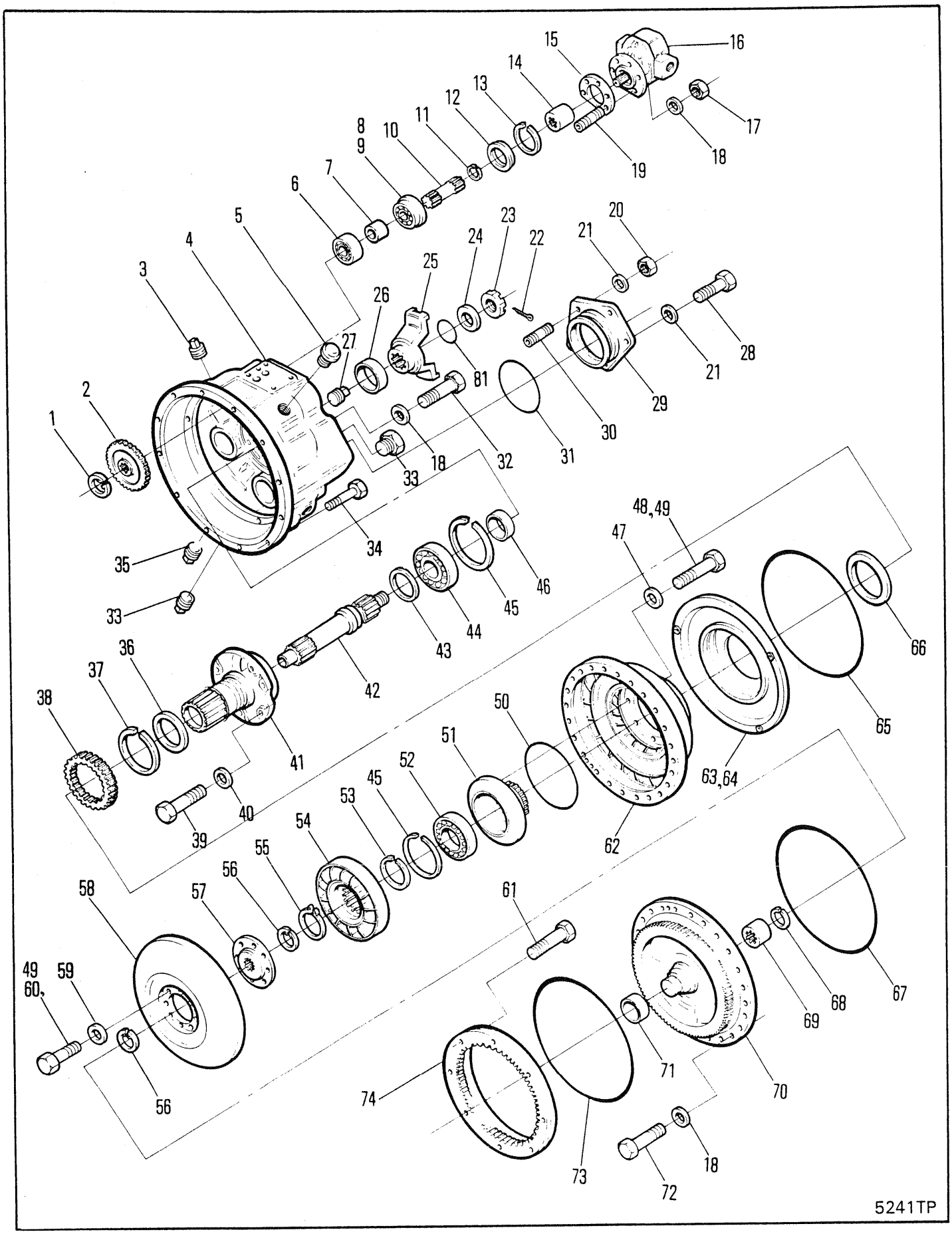
1
2
3
4
5
6
7
8
9
10
11
12
13
14
15
16
17
18
19
20
21
22
23
24
25
26
27
28
29
30
31
32
33
34
35
36
37
38
39
40
41
42
43
44
45
46
47
48,49
50
51
52
53
54
55
56
57
58
59
60
61
62
63,64
65
66
67
68
69
70
71
72
73
74
81
5241TP

# CONVERTER ASSEMBLY
# CONVERTISSEUR, ENSEMBLE
# DREHMOMENTWANDLER, VOLLSTÄNDIG
# CONVERSOR, CONJUNTO
# CONVERTIDOR, CONJUNTO

| No. | Part No. | Qty | Description | Description | Benennung | Descrição | Descripción |
|---|---|---|---|---|---|---|---|
| A | [7]286288 | 1 | Torque conv | convert de couple | Drenmomentwandler | conversor de torque | convtdor torsión |
| 1 | 711298 | 2 | Snap ring | circlips | Sperring | anel de trava | anillo de retención |
| 2 | 214931 | 2 | Gear pump drive | pompe dentr pign | Pumpenantriebsrad | acion bomba engr | engr bomba prop |
| 3 | 13F000016 | 3 | Plug | bouchon | Stopfen | bujão | tapón |
| 4 | 214981 | 1 | Housing assy | boitier ens | Gehuse vollst | carcaça conj | carcasa conj |
| 5 | 233598 | 1 | Breather | reniflard | Entlüfter | respiradouro | respiradero |
| 6 | 214936 | 2 | Bearing | palier | Lager | mancal | cojinete |
| 7 | 214930 | 2 | Spacer | entretoise | Distanzteil | espaçador | espaciador |
| 8 | 214954 | 2 | Snap ring | circlips | Sperring | anel de trava | anillo de retención |
| 9 | 214956 | 2 | Bearing | palier | Lager | mancal | cojinete |
| 10 | 214928 | 2 | Drive shaft | arbre moteur | Gelenkwelle | eixo propulsor | árbol impulsor |
| 11 | 224039 | 2 | Snap ring | circlips | Sperring | anel de trava | anillo de retención |
| 12 | 214929 | 2 | Washer | rondelle | Scheibe | arruela | arandela |
| 13 | 713186 | 2 | Snap ring | circlips | Sperring | anel de trava | anillo de retención |
| 14 | 214961 | 1 | Sleeve | manchon | Muffe | luva | manguito |
| 15 | 235961 | 1 | Gasket | garniture | Dichtung | gaxeta | empaquetadura |
| 16 | 450230 | 1 | Charging pump | pompe de chargemnt | Ladepumpe | bomba de carga | bomba de carga |
| 17 | 8D000006 | 6 | Nut | écrou | Mutter | porca | tuerca |
| 18 | 4E000006 | 33 | Lockwasher | rondelle frein | Sicherungsscheibe | arruela de pressão | arandela seguridad |
| 19 | 207647 | 6 | Stud | goujon | Stift | prisioneiro | espárrago |
| 20 | 8D000007 | 2 | Stud | goujon | Stift | prisioneiro | espárrago |
| 21 | 4E000007 | 5 | Lockwasher | rondelle frein | Sicherungsscheibe | arruela de pressão | arandela seguridad |
| 22 | 1F000424 | 1 | Pin | goupille | Stift | pino | pasador |
| 23 | 201951 | 1 | Nut | écrou | Mutter | porca | tuerca |
| 24 | 102745 | 1 | Washer | rondelle | Scheibe | arruela | arandela |
| 25 | 215702 | 1 | Flange,output | bride sortie | Flansche Ausgangs | flange saida | platina salida |

[1] Inc. 237242 ring and 237243 spring
[1] Compren anneau 237242 et ressort 237243
[1] Hatte Ring 237242 und Feder 237243
[1] Incl. o anel 237242 et a mola 237243
[1] Inc. anillos 237242 y resortes 237243

[2] 801524 Inc 70 & 71

[3] See 75
[3] Voir 75
[3] Siehe 75
[3] Veja 75
[3] Véase 75

[4] Inc. 53 and 229565 Reaction Member
[4] Comprend 53 & 229565 stator
[4] Ernschl. 53 and 229565 Stator
[4] Incl. 53 & 229565 estator
[4] Inc. 53 & 229565 estator

[5] Service steel baffle with aluminum baffle kit 802003 use steel type seal 235593 with steel baffle, use aluminum type seal 237025 with aluminum baffle.
[5] L'entretien du déflecteur en acier nécesite la trousse n 802003. Utilisez le joint du type acier 235593 avec le joint dy type aluminum n 237025 avec le dé en aluminum.
[5] Zur Instandhaltung des Deflectors aus Stahl, bediene man sich der Ausrüstung Nr. 802003. Für den Deflektor aus Stahl benutze man aine Dictung aus Stahl Typ Nr. 235593. Für den Deflektor aus Aluminum Typ Nr. 237025.
[5] Serviço do Deflector de aço com o Jogo do Defletor de Alumínio no. 802003. Use vedador tipo alumínio 237025 com Defletor de Alumínio.
[5] El Servicio del Deflector de Acero debe hacerse con el Juego de Deflector de Aluminio No. 802003. Use sello tipo acero No. 235593 con el deflector de acero. Use sello tipo aluminio No 237025 con el deflector de aluminio.

[6] See S.B. Group 281, No. 02, 9/86. Engine Flywheel must be replaced.
[6] Voir S.B. Group 281, No. 02, 9/86. Remplacez le volant de moteur.
[6] Siehe S.B. Group 281, No. 02, 9/86. Man ersetze das Motorschwungrad.
[6] Ver S.B. Group 281, No. 02, 9/86. Volante do motor deve ser substituido.
[6] Ver S.B. Group 281, No. 02, 9/86. Se debe reemplazar el volante del motor.

[7] Inc. 1➡72 & 75➡81

666CUM 500D-1001-CAC➡500G-9999-CAC
666GM 513E-496-CAC➡513G-9999-CAC

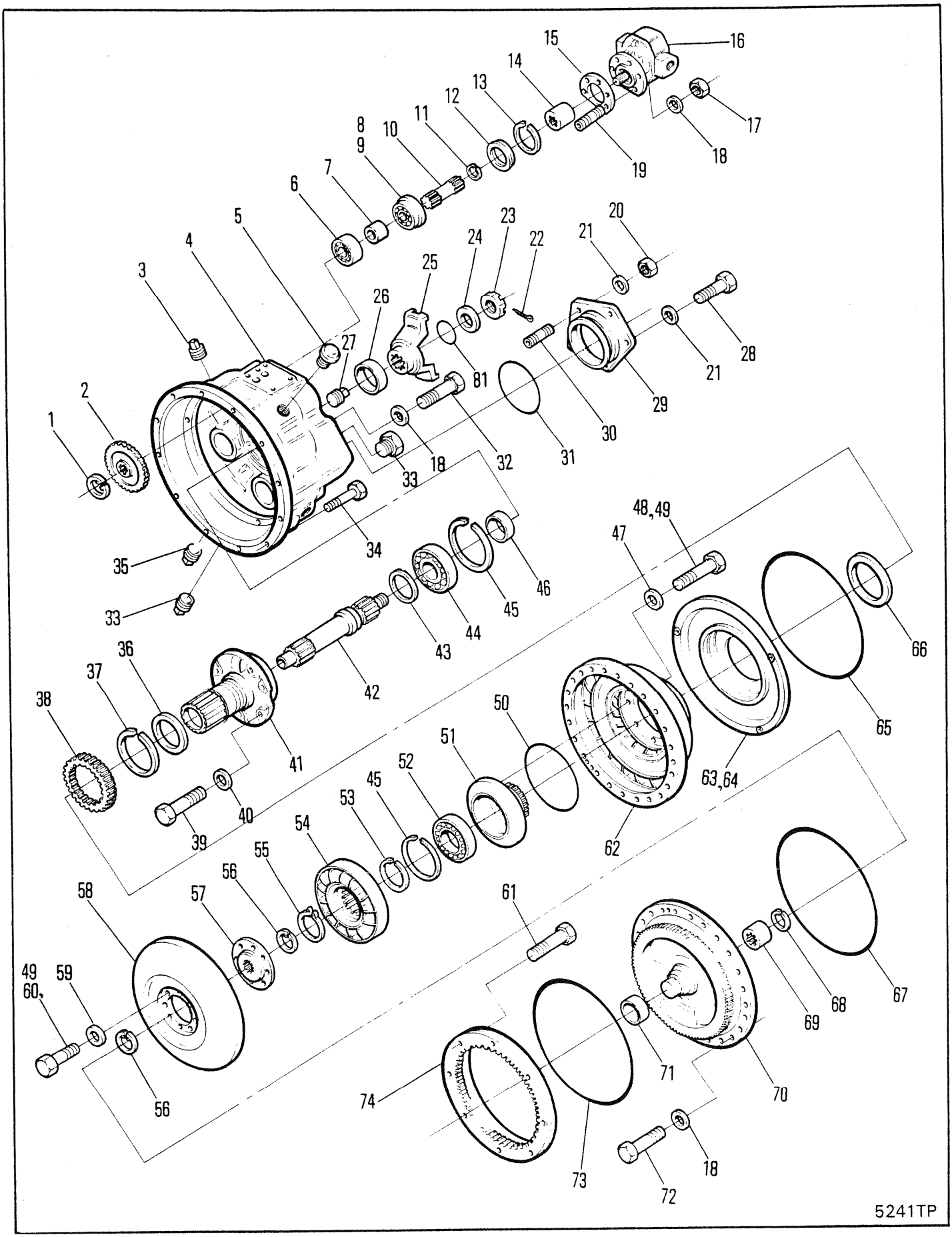
1
2
3
4
5
6
7
8
9
10
11
12
13
14
15
16
17
18
19
20
21
22
23
24
25
26
27
28
29
30
31
32
33
34
35
36
37
38
39
40
41
42
43
44
45
46
47
48,49
50
51
52
53
54
55
56
57
58
59
60
61
62
63,64
65
66
67
68
69
70
71
72
73
74
81
5241TP

# CONVERTER ASSEMBLY
# CONVERTISSEUR, ENSEMBLE
# DREHMOMENTWANDLER, VOLLSTÄNDIG
# CONVERSOR, CONJUNTO
# CONVERTIDOR, CONJUNTO

| No. | Part No. | Qty | Description | Description | Benennung | Descrição | Descripción |
|---|---|---|---|---|---|---|---|
| 26 | **206864** | 1 | Seal oil | jnt étanchéité huile | Idichtung | vedação de óleo | sello de aceite |
| 27 | **16F000008** | 2 | Plug | bouchon | Stopfen | bujão | tapón |
| 28 | **1C000720** | 3 | Screw | vis | Schraube | parafuso | tornillo |
| 29 | **214979** | 1 | Cover | couvercle | Deckel | tampa | tapa |
| 30 | **214730** | 2 | Stud | goujon | Stift | prisioneiro | espárrago |
| 31 | **25K040512** | 1 | O-ring | joint torique | O Ring | anel-O | anillo-O |
| 32 | **1C000628** | 3 | Screw | vis | Schraube | parafuso | tornillo |
| 33 | **40K000002** | 3 | Plug | bouchon | Stopfen | bujão | tapón |
| 34 | **33C000620** | 12 | Bolt | boulon | Bolzen | parafuso | bulón |
| 35 | **40K000016** | 1 | Plug | bouchon | Stopfen | bujão | tapón |
| 36 | [1]**801984** | 1 | Ring kit | ens de la couronne | Ringsatz | conjunto de anéis | conj anillo |
| 37 | **224009** | 1 | Snap ring | circlips | Sperring | anel de trava | anillo de retención |
| 38 | **214951** | 1 | Gear | engrenage | Zahnrad | engrenagem | engranaje |
| 39 | **1C000820** | 6 | Bolt | boulon | Bolzen | parafuso | bulón |
| 40 | **7E000008** | 6 | Lockwasher | rondelle frein | Sicherungsscheibe | arruela de pressão | arandela seguridad |
| 41 | **237405** | 1 | Stator | stator | Stator | estator | estator |
| 42 | **214983** | 1 | Shaft | arbre | Welle | ávore | árbol |
| 43 | **222079** | 1 | Piston ring | segment de piston | Kolbenring | anel do pistão | aro del pistón |
| 44 | **239742** | 1 | Bearing | palier | Lager | mancal | cojinete |
| 45 | **214953** | 2 | Snap ring | circlips | Sperring | anel de trava | anillo de retención |
| 46 | **214984** | 1 | Spacer | entretoise | Distanzteil | espaçador | espaciador |
| 47 | **619025** | 8 | Lockwasher | rondelle frein | Sicherungsscheibe | arruela de pressão | arandela seguridad |
| 48 | **4C000714** | 8 | Bolt | boulon | Bolzen | parafuso | bulón |
| 49 | **28H000018** | 9 | Lockwire | fil blocage | Sicherungsdraht | fio segurança | alambre seguridad |
| 50 | **25K040616** | 1 | O-ring | joint torique | O Ring | anel-O | anillo-O |
| 51 | **214923** | 1 | Hub | moyeu | Nabe | cubo | cubo |
| 52 | **214596** | 1 | Bearing | palier | Lager | mancal | cojinete |
| 53 | **229566** | 1 | Spacer | entretoise | Distanzteil | espaçador | espaciador |
| 54 | [4]**801607** | 1 | Spacer kit | entretoises jeu | Distanzteil Satz | espaçador jôgo | espaciador jgo |
| 55 | **743035** | 1 | Snap ring | circlips | Sperring | anel de trava | anillo de retención |

[1] Inc. 237242 ring and 237243 spring
[1] Compren anneau 237242 et ressort 237243
[1] Hatte Ring 237242 und Feder 237243
[1] Incl. o anel 237242 et a mola 237243
[1] Inc. anillos 237242 y resortes 237243

[2] 801524 Inc 70 & 71

[3] See 75
[3] Voir 75
[3] Siehe 75
[3] Veja 75
[3] Véase 75

[4] Inc. 53 and 229565 Reaction Member
[4] Comprend 53 & 229565 stator
[4] Ernschl. 53 and 229565 Stator
[4] Incl. 53 & 229565 estator
[4] Inc. 53 & 229565 estator

[5] Service steel baffle with aluminum baffle kit 802003 use steel type seal 235593 with steel baffle, use aluminum type seal 237025 with aluminum baffle.
[5] L'entretien du déflecteur en acier nécesite la trousse n 802003. Utilisez le joint du type acier 235593 avec le joint dy type aluminum n 237025 avec le dé en aluminum.
[5] Zur Instandhaltung des Deflectors aus Stahl, bediene man sich der Ausrüstung Nr. 802003. Für den Deflektor aus Stahl benutze man aine Dictung aus Stalhl Typ Nr. 235593. Für den Deflektor aus Aluminum Typ Nr. 237025.
[5] Serviço do Deflector de aço com o Jogo do Defletor de Alumínio no. 802003. Use vedador tipo alumínio 237025 com Defletor de Alumínio.
[5] El Servicio del Deflector de Acero debe hacerse con el Juego de Deflector de Aluminio No. 802003. Use sello tipo acero No. 235593 con el deflector de acero. Use sello tipo aluminio No 237025 con el deflector de aluminio.

[6] See S.B. Group 281, No. 02, 9/86. Engine Flywheel must be replaced.
[6] Voir S.B. Group 281, No. 02, 9/86. Remplacez le volant de moteur.
[6] Siehe S.B. Group 281, No. 02, 9/86. Man ersetze das Motorschwungrad.
[6] Ver S.B. Group 281, No. 02, 9/86. Volante do motor deve ser substituido.
[6] Ver S.B. Group 281, No. 02, 9/86. Se debe reemplazar el volante del motor.

[7] Inc. 1→72 & 75→81

666CUM 500D-1001-CAC→500G-9999-CAC
666GM 513E-496-CAC→513G-9999-CAC

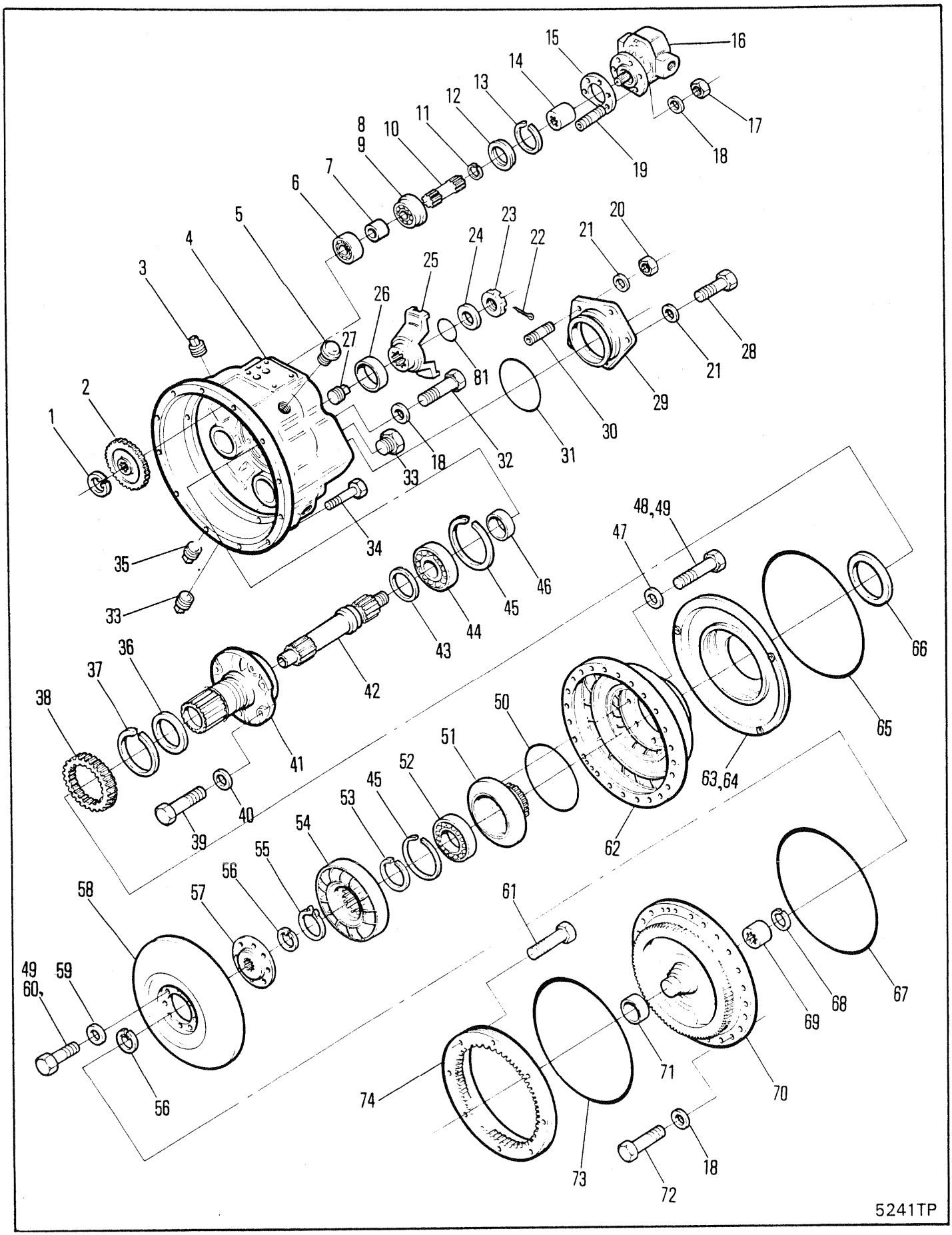
1
2
3
4
5
6
7
8
9
10
11
12
13
14
15
16
17
18
19
20
21
22
23
24
25
26
27
28
29
30
31
32
33
34
35
36
37
38
39
40
41
42
43
44
45
46
47
48,49
50
51
52
53
54
55
56
57
58
59
60,
61
62
63,64
65
66
67
68
69
70
71
72
73
74
81
5241TP

# CONVERTER ASSEMBLY
# CONVERTISSEUR, ENSEMBLE
# DREHMOMENTWANDLER, VOLLSTÄNDIG
# CONVERSOR, CONJUNTO
# CONVERTIDOR, CONJUNTO

| No. | Part No. | Qty | Description | Description | Benennung | Descrição | Descripción |
|---|---|---|---|---|---|---|---|
| 56 | **659065** | 2 | Snap ring | circlips | Sperring | anel de trava | anillo de retención |
| 57 | **214924** | 1 | Hub | moyeu | Nabe | cubo | cubo |
| 58 | **222684** | 1 | Turbine | turbine | Turbine | turbina | turbina |
| 59 | **619023** | 1 | Washer | rondelle | Scheibe | arruela | arandela |
| 60 | **209313** | 8 | Screw | vis | Schraube | parafuso | tornillo |
| 61 | [6]**240318** | 32 | Bolt | boulon | Bolzen | parafuso | bulón |
| 62 | **214920** | 1 | Impeller | impulseur | Pumprad | impulsor | impulsor |
| 63 | [5]**214925** | 1 | Oil baffle | déflecteur huile | Ideflektor | defletor óleo | deflector aceite |
| 64 | [5]**802003** | 1 | Baffle kit | jeu de déflecteur | Deflektorsatz | jogo deflector | juego de deflector |
| 65 | **232535** | 1 | O-ring | joint torique | O Ring | anel-O | anillo-O |
| 66 | [5]**235593** | 1 | Seal oil | jnt étanchéité huile | Idichtung | vedação de óleo | sello de aceite |
| 67 | **60K041200** | 1 | O-ring | joint torique | O Ring | anel-O | anillo-O |
| 68 | **666542** | 1 | Snap ring | circlips | Sperring | anel de trava | anillo de retención |
| 69 | **214988** | 1 | Bearing | palier | Lager | mancal | cojinete |
| 70 | [3]§------- | 1 | Cover | couvercle | Deckel | tampa | tapa |
| 71 | [3]**222006** | 1 | Sleeve | manchon | Muffe | luva | manguito |
| 72 | **1C000616** | 24 | Bolt | boulon | Bolzen | parafuso | bulón |
| 73 | [6]**236937** | 1 | Ring | anneau | Ring | anel | anillo |
| 74 | [6]**236936** | 1 | Ring gear | couronne dentée | Zahnkranz | corõa | corona |
| 75 | [2]**801524** | 2 | Cover | couvercle | Deckel | tampa | tapa |
| 76 | †**207873** | 2 | Screw | vis | Schraube | parafuso | tornillo |
| 77 | †**220725** | 1 | Name plate | plaque duconstructr | Namensschild | placa do nome | placa de nombre |
| 78 | †**5C000612** | 6 | Bolt | boulon | Bolzen | parafuso | bulón |
| 79 | †**223124** | 1 | Cover | couvercle | Deckel | tampa | tapa |
| 80 | †**223125** | 1 | Gasket | garniture | Dichtung | gaxeta | empaquetadura |
| 81 | †**25K040112** | 1 | O-ring | joint torique | O Ring | anel-O | anillo-O |

[1] Inc. 237242 ring and 237243 spring
[1] Compren anneau 237242 et ressort 237243
[1] Hatte Ring 237242 und Feder 237243
[1] Incl. o anel 237242 et a mola 237243
[1] Inc. anillos 237242 y resortes 237243

[2] 801524 Inc 70 & 71

[3] See 75
[3] Voir 75
[3] Siehe 75
[3] Veja 75
[3] Véase 75

[4] Inc. 53 and 229565 Reaction Member
[4] Comprend 53 & 229565 stator
[4] Ernschl. 53 and 229565 Stator
[4] Incl. 53 & 229565 estator
[4] Inc. 53 & 229565 estator

[5] Service steel baffle with aluminum baffle kit 802003 use steel type seal 235593 with steel baffle, use aluminum type seal 237025 with aluminum baffle.
[5] L'entretien du déflecteur en acier nécesite la trousse n 802003. Utilisez le joint du type acier 235593 avec le joint dy type aluminum n 237025 avec le dé en aluminum.
[5] Zur Instandhaltung des Deflectors aus Stahl, bediene man sich der Ausrüstung Nr. 802003. Für den Deflektor aus Stahl benutze man aine Dictung aus Stalhl Typ Nr. 235593. Für den Deflektor aus Aluminum Typ Nr. 237025.
[5] Serviço do Deflector de aço com o Jogo do Defletor de Alumínio no. 802003. Use vedador tipo alumínio 237025 com Defletor de Alumínio.
[5] El Servicio del Deflector de Acero debe hacerse con el Juego de Deflector de Aluminio No. 802003. Use sello tipo acero No. 235593 con el deflector de acero. Use sello tipo aluminio No 237025 con el deflector de aluminio.

[6] See S.B. Group 281, No. 02, 9/86. Engine Flywheel must be replaced.
[6] Voir S.B. Group 281, No. 02, 9/86. Remplacez le volant de moteur.
[6] Siehe S.B. Group 281, No. 02, 9/86. Man ersetze das Motorschwungrad.
[6] Ver S.B. Group 281, No. 02, 9/86. Volante do motor deve ser substituido.
[6] Ver S.B. Group 281, No. 02, 9/86. Se debe reemplazar el volante del motor.

[7] Inc. 1➞72 & 75➞81

666CUM 500D-1001-CAC➞500G-9999-CAC
666GM 513E-496-CAC➞513G-9999-CAC

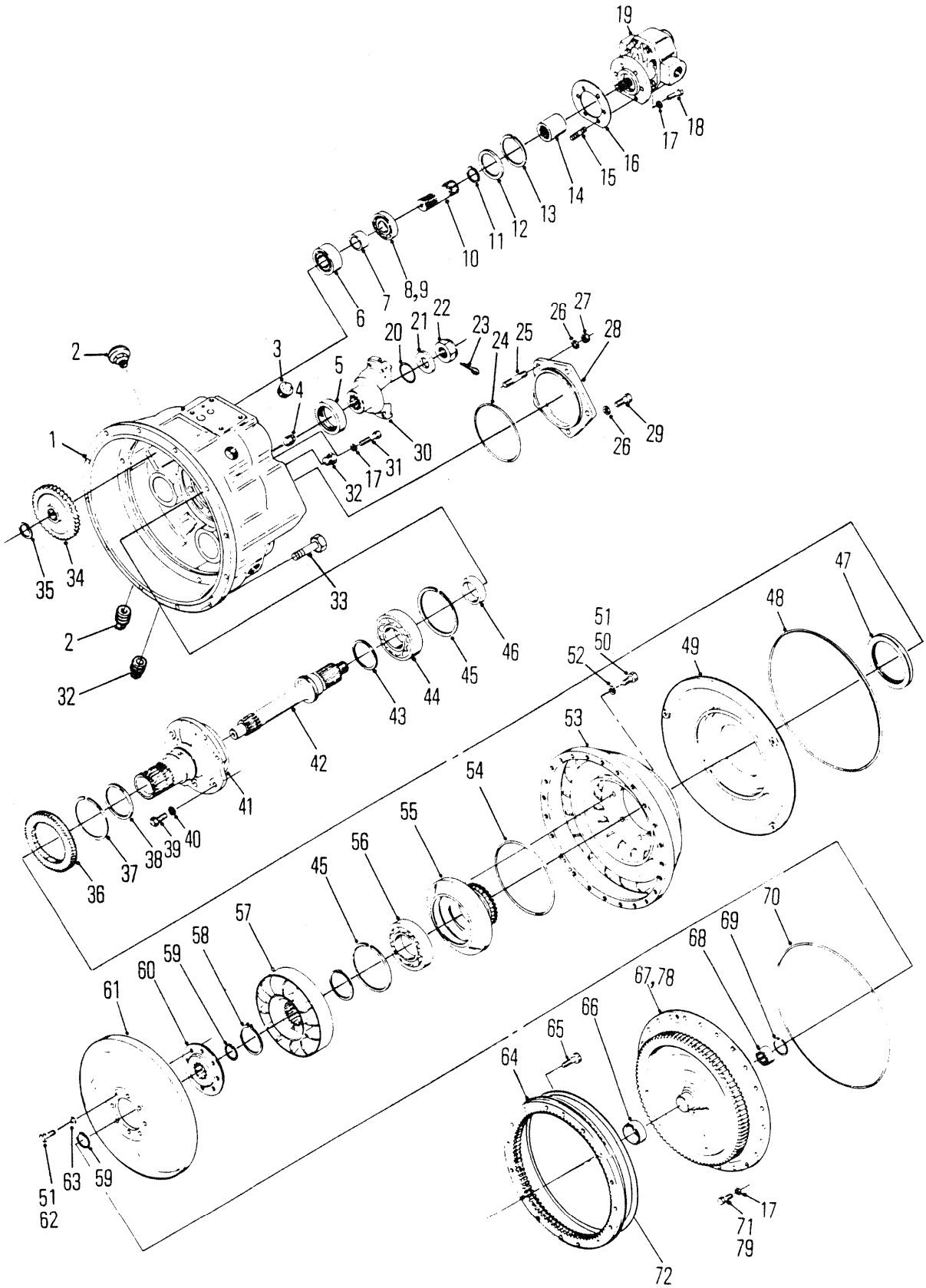
19
18
17
16
15
14
13
12
11
10
8,9
7
6
2
3
4
5
20
21
22
23
24
25
26
27
28
29
30
31
32
1
35
34
33
46
45
44
43
42
41
40
39
38
37
36
47
48
49
50
51
52
53
54
55
56
57
58
59
60
61
63
62
64
65
66
67,78
68
69
70
71
79
72

6558TP

# CONVERTER ASSEMBLY
# CONVERTISSEUR, ENSEMBLE
# DREHMOMENTWANDLER, VOLLSTÄNDIG
# CONVERSOR, CONJUNTO
# CONVERTIDOR, CONJUNTO

| No. | Part No. | Qty | Description | Description | Benennung | Descrição | Descripción |
|---|---|---|---|---|---|---|---|
| A | [1]284053 | 1 | Torque conv assy | ens conv couple | Drehmomentwndlr voll | conj conv torque | conj conv par |
| 1 | 214981 | 1 | Housing assy | boitier ens | Gehuse vollst | carcaça conj | carcasa conj |
| 2 | 13F000016 | 3 | Plug | bouchon | Stopfen | bujão | tapón |
| 3 | 233598 | 1 | Breather | reniflard | Entlüfter | respiradouro | respiradero |
| 4 | 16F000008 | 2 | Plug | bouchon | Stopfen | bujão | tapón |
| 5 | 206864 | 1 | Seal oil | jnt étanchéité huile | Idichtung | vedação de óleo | sello de aceite |
| 6 | 214936 | 2 | Bearing | palier | Lager | mancal | cojinete |
| 7 | 214930 | 2 | Spacer | entretoise | Distanzteil | espaçador | espaciador |
| 8 | 214954 | 2 | Snap ring | circlips | Sperring | anel de trava | anillo de retención |
| 9 | 214956 | 2 | Bearing | palier | Lager | mancal | cojinete |
| 10 | 214928 | 2 | Drive shaft | arbre moteur | Gelenkwelle | eixo propulsor | árbol impulsor |
| 11 | 224039 | 2 | Snap ring | circlips | Sperring | anel de trava | anillo de retención |
| 12 | 214929 | 2 | Washer | rondelle | Scheibe | arruela | arandela |
| 13 | 713186 | 2 | Snap ring | circlips | Sperring | anel de trava | anillo de retención |
| 14 | 214961 | 1 | Sleeve | manchon | Muffe | luva | manguito |
| 15 | 207647 | 6 | Stud | goujon | Stift | prisioneiro | espárrago |
| 16 | 235961 | 1 | Gasket | garniture | Dichtung | gaxeta | empaquetadura |
| 17 | 4E000006 | 33 | Lockwasher | rondelle frein | Sicherungsscheibe | arruela de pressão | arandela seguridad |
| 18 | 8D000006 | 6 | Nut | écrou | Mutter | porca | tuerca |
| 19 | 450230 | 1 | Charging pump | pompe de chargemnt | Ladepumpe | bomba de carga | bomba de carga |
| 20 | 25K040112 | 1 | O-ring | joint torique | O Ring | anel-O | anillo-O |
| 21 | 102745 | 1 | Washer | rondelle | Scheibe | arruela | arandela |
| 22 | 201951 | 1 | Nut | écrou | Mutter | porca | tuerca |
| 23 | 1F000424 | 1 | Pin | goupille | Stift | pino | pasador |
| 24 | 25K040512 | 1 | O-ring | joint torique | O Ring | anel-O | anillo-O |
| 25 | 214730 | 2 | Stud | goujon | Stift | prisioneiro | espárrago |
| 26 | 4E000007 | 5 | Lockwasher | rondelle frein | Sicherungsscheibe | arruela de pressão | arandela seguridad |
| 27 | 8D000007 | 2 | Stud | goujon | Stift | prisioneiro | espárrago |
| 28 | 214979 | 1 | Cover | couvercle | Deckel | tampa | tapa |
| 29 | 1C000720 | 3 | Screw | vis | Schraube | parafuso | tornillo |
| 30 | 215702 | 1 | Flange,output | bride sortie | Flansche Ausgangs | flange saida | platina salida |
| 31 | 1C000628 | 3 | Screw | vis | Schraube | parafuso | tornillo |
| 32 | 40K000002 | 3 | Plug | bouchon | Stopfen | bujão | tapón |
| 33 | 33C000620 | 12 | Bolt | boulon | Bolzen | parafuso | bulón |
| 34 | 214931 | 2 | Gear pump drive | pompe dentr pign | Pumpenantriebsrad | acion bomba engr | engr bomba prop |
| 35 | 711298 | 2 | Snap ring | circlips | Sperring | anel de trava | anillo de retención |
| 36 | 214951 | 1 | Gear | engrenage | Zahnrad | engrenagem | engranaje |
| 37 | 224009 | 1 | Snap ring | circlips | Sperring | anel de trava | anillo de retención |
| 38 | [3]801984 | 1 | Ring kit | ens de la couronne | Ringsatz | conjunto de anéis | conj anillo |
| 39 | 1C000820 | 6 | Bolt | boulon | Bolzen | parafuso | bulón |
| 40 | 7E000008 | 6 | Lockwasher | rondelle frein | Sicherungsscheibe | arruela de pressão | arandela seguridad |

[1] Inc. 1➞78

[2] See S.B. Group 281, No. 02, 9/86. Engine flywheel must be replaced.
[2] Voir S.B. Group 281, No. 02, 9/86. Remplacez le volant de moteur.
[2] Siehe S.B. Group 281, No. 02, 9/86. Man ersetze das Motorschwungrad.
[2] Ver S.B. Group 281, No. 02, 9/86. Volante do motor deve ser substituido.
[2] Ver S.B. Group 281, No. 02, 9/86. Se debe reemplazar el volante del motor.

[3] Inc 237242 ring and 237243 spring
[3] Compren anneau 237242 et ressort 237243
[3] Hatte Ring 237242 und Feder 237243
[3] Incl. o anel 237242 et a mola 237243
[3] Inc. anillos 237242 y resortes 237243

[4] Inc 66 & 67

[5] See 78
[5] Voir 78
[5] Siehe 78
[5] Veja 78
[5] Véase 78

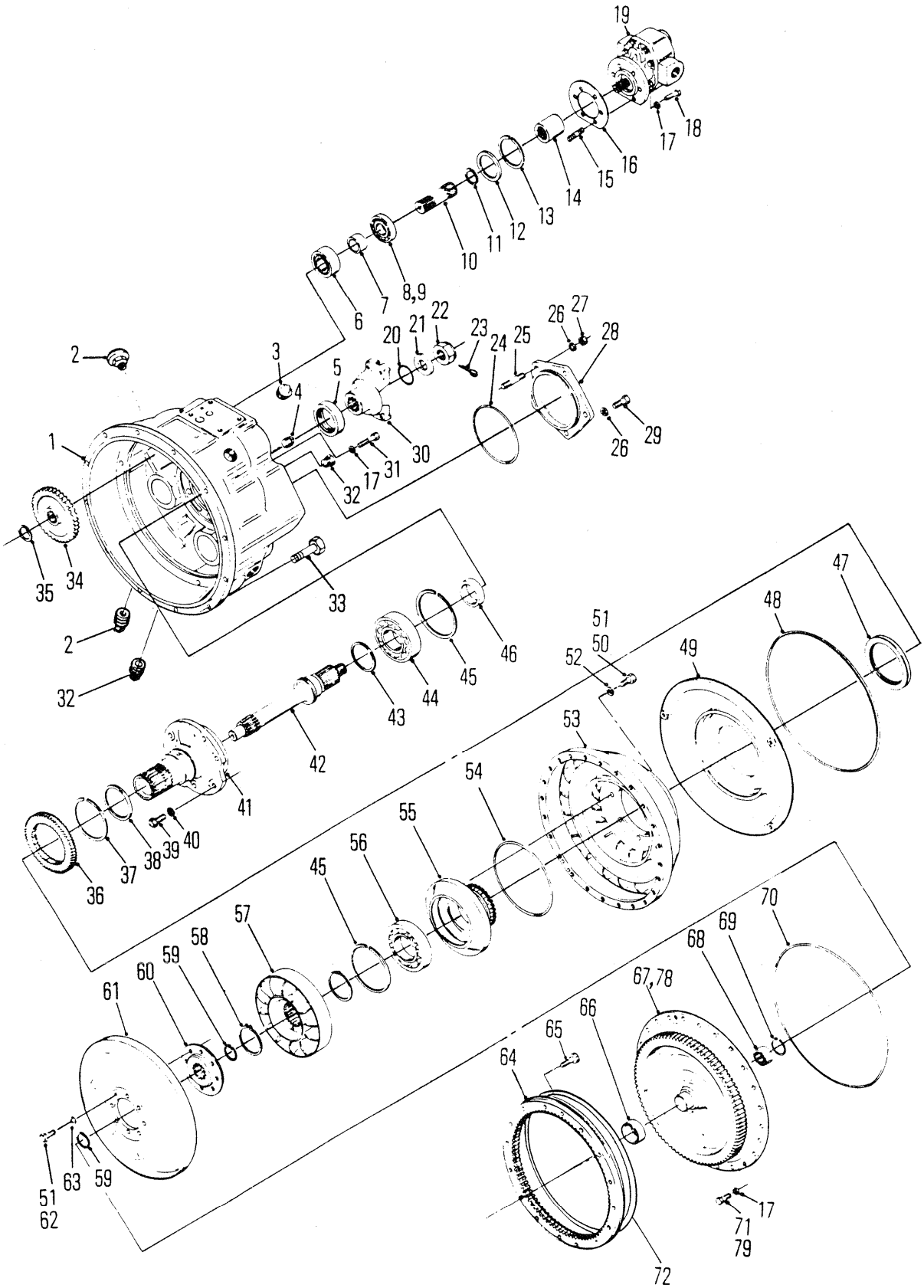
19
18
17
16
15
14
13
12
11
10
8,9
7
6
2
3
4
5
20
21
22
23
24
25
26
27
28
29
30
31
32
1
35
34
33
47
48
49
51
50
52
46
45
44
43
42
41
53
54
55
56
45
57
58
59
60
61
40
39
38
37
36
70
69
68
67,78
66
65
64
63
62
71
79
72

6558TP

# CONVERTER ASSEMBLY
# CONVERTISSEUR, ENSEMBLE
# DREHMOMENTWANDLER, VOLLSTÄNDIG
# CONVERSOR, CONJUNTO
# CONVERTIDOR, CONJUNTO

| No. | Part No. | Qty | Description | Description | Benennung | Descrição | Descripción |
|---|---|---|---|---|---|---|---|
| 41 | **237405** | 1 | Stator | stator | Stator | estator | estator |
| 42 | **214983** | 1 | Shaft | arbre | Welle | ávore | árbol |
| 43 | **222079** | 1 | Piston ring | segment de piston | Kolbenring | anel do pistão | aro del pistón |
| 44 | **231554** | 1 | Bearing | palier | Lager | mancal | cojinete |
| 45 | **214953** | 2 | Snap ring | circlips | Sperring | anel de trava | anillo de retención |
| 46 | **214984** | 1 | Spacer | entretoise | Distanzteil | espaçador | espaciador |
| 47 | **235593** | 1 | Seal oil | jnt étanchéité huile | Idichtung | vedação de óleo | sello de aceite |
| 48 | **232535** | 1 | O-ring | joint torique | O Ring | anel-O | anillo-O |
| 49 | **214925** | 1 | Oil baffle | déflecteur huile | Ideflektor | defletor óleo | deflector aceite |
| 50 | **4C000714** | 8 | Bolt | boulon | Bolzen | parafuso | bulón |
| 51 | **28H000018** | 9 | Lockwire | fil blocage | Sicherungsdraht | fio segurança | alambre seguridad |
| 52 | **619025** | 8 | Lockwasher | rondelle frein | Sicherungsscheibe | arruela de pressão | arandela seguridad |
| 53 | **214959** | 1 | Impeller | impulseur | Pumprad | impulsor | impulsor |
| 54 | **60K040424** | 1 | O-ring | joint torique | O Ring | anel-O | anillo-O |
| 55 | **214958** | 1 | Hub | moyeu | Nabe | cubo | cubo |
| 56 | **214596** | 1 | Bearing | palier | Lager | mancal | cojinete |
| 57 | **801608** | 1 | Reaction member | stator | Stator | estator | Estator |
| 58 | **743035** | 1 | Snap ring | circlips | Sperring | anel de trava | anillo de retención |
| 59 | **659065** | 2 | Snap ring | circlips | Sperring | anel de trava | anillo de retención |
| 60 | **214924** | 1 | Hub | moyeu | Nabe | cubo | cubo |
| 61 | **240467** | 1 | Turbine | turbine | Turbine | turbina | turbina |
| 62 | **209313** | 8 | Screw | vis | Schraube | parafuso | tornillo |
| 63 | **619023** | 1 | Washer | rondelle | Scheibe | arruela | arandela |
| 64 | [2]**236936** | 1 | Ring gear | couronne dentée | Zahnkranz | corõa | corona |
| 65 | [2]**240318** | 32 | Bolt | boulon | Bolzen | parafuso | bulón |
| 66 | [5]**222006** | 1 | Sleeve | manchon | Muffe | luva | manguito |
| 67 | [4]§------ | 1 | Cover | couvercle | Deckel | tampa | tapa |
| 68 | **214988** | 1 | Bearing | palier | Lager | mancal | cojinete |
| 69 | **666542** | 1 | Snap ring | circlips | Sperring | anel de trava | anillo de retención |
| 70 | **60K041200** | 1 | O-ring | joint torique | O Ring | anel-O | anillo-O |
| 71 | **1C000616** | 24 | Bolt | boulon | Bolzen | parafuso | bulón |
| 72 | [2]**236937** | 1 | Ring | anneau | Ring | anel | anillo |
| 73 | †**207873** | 2 | Screw | vis | Schraube | parafuso | tornillo |
| 74 | †**220725** | 1 | Name plate | plaque duconstructr | Namensschild | placa do nome | placa de nombre |
| 75 | †**223124** | 1 | Cover | couvercle | Deckel | tampa | tapa |
| 76 | †**223125** | 1 | Gasket | garniture | Dichtung | gaxeta | empaquetadura |
| 77 | **33C000620** | 12 | Bolt | boulon | Bolzen | parafuso | bulón |
| 78 | [4]**801524** | 2 | Cover | couvercle | Deckel | tampa | tapa |

[1] Inc. 1➡78

[2] See S.B. Group 281, No. 02, 9/86. Engine flywheel must be replaced.
[2] Voir S.B. Group 281, No. 02, 9/86. Remplacez le volant de moteur.
[2] Siehe S.B. Group 281, No. 02, 9/86. Man ersetze das Motorschwungrad.
[2] Ver S.B. Group 281, No. 02, 9/86. Volante do motor deve ser substituido.
[2] Ver S.B. Group 281, No. 02, 9/86. Se debe reemplazar el volante del motor.

[3] Inc 237242 ring and 237243 spring
[3] Compren anneau 237242 et ressort 237243
[3] Hatte Ring 237242 und Feder 237243
[3] Incl. o anel 237242 et a mola 237243
[3] Inc. anillos 237242 y resortes 237243

[4] Inc 66 & 67

[5] See 78
[5] Voir 78
[5] Siehe 78
[5] Veja 78
[5] Véase 78

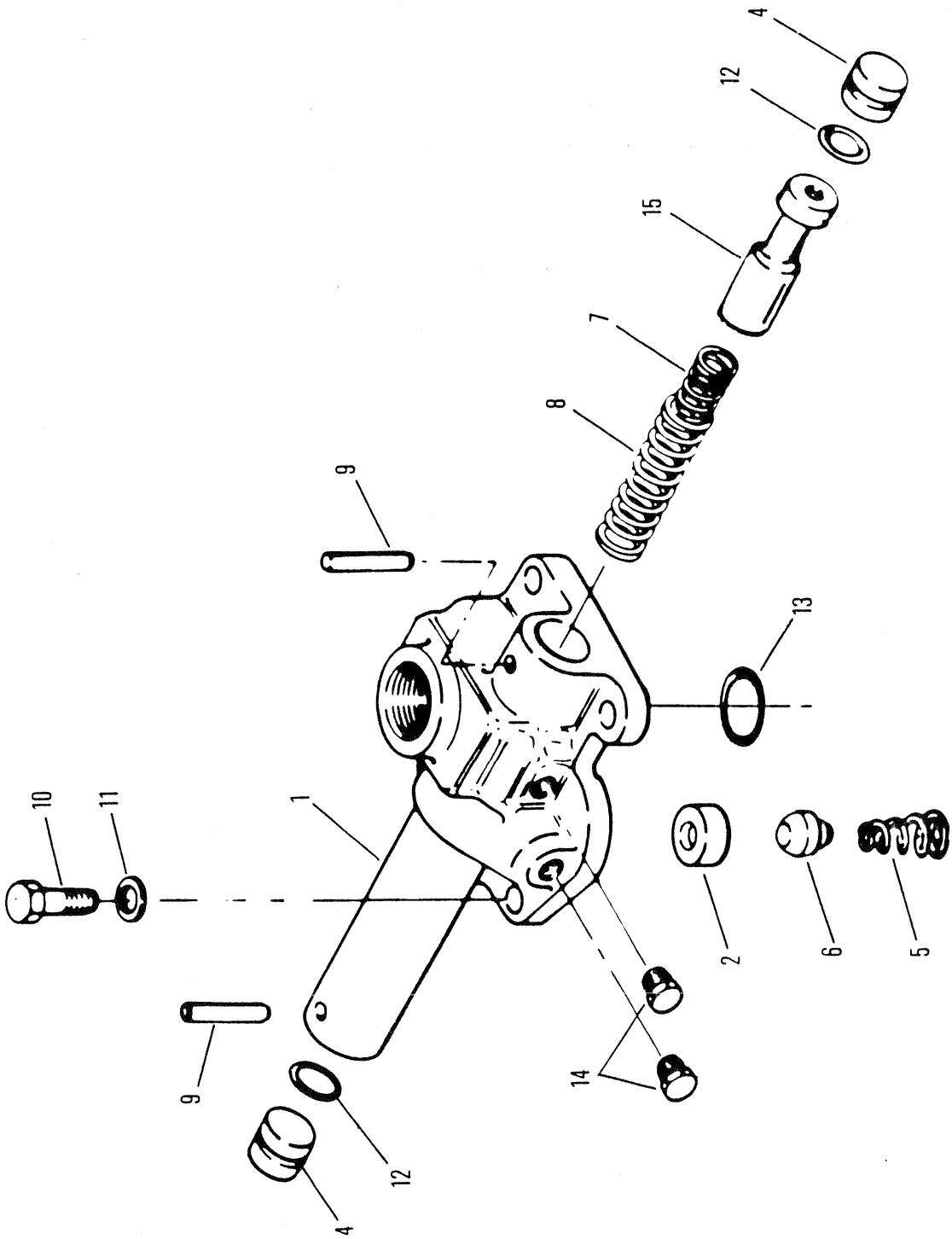
5249TP
4
12
15
7
8
9
13
10
11
1
2
6
5
9
14
12
4

# REGULATOR VALVE
# VANNE RÉGULATRICE
# REGELVENTIL
# VÁLVULA DO REGULADOR
# VÁLVULA DEL REGULADOR

| No. | Part No. | Qty | Description | Description | Benennung | Descrição | Descripción |
|---|---|---|---|---|---|---|---|
| A | [1]214943 | 1 | Valve | soupape | Ventil | válvula | válvula |
| 1 | [2]§------ | 1 | Valve body | corps soupape | Ventil Körper | corpo válvula | cuerpo válvula |
| 2 | 214946 | 1 | Seat | sige | Sitz | assento | asiento |
| 3 | †214949 | 1 | Gasket | garniture | Dichtung | gaxeta | empaquetadura |
| 4 | 220983 | 2 | Stop | butoir | Anschlag | batente | tope |
| 5 | 222312 | 1 | Spring | ressort | Feder | mola | resorte |
| 6 | 222318 | 1 | Plunger | plongeur | Druckstange | embolo | émbolo buzo |
| 7 | 224368 | 1 | Spring | ressort | Feder | mola | resorte |
| 8 | 224369 | 1 | Spring | ressort | Feder | mola | resorte |
| 9 | 660178 | 2 | Pin | goupille | Stift | pino | pasador |
| 10 | 1C000616 | 4 | Bolt | boulon | Bolzen | parafuso | bulón |
| 11 | 4E000006 | 4 | Lockwasher | rondelle frein | Sicherungsscheibe | arruela de pressão | arandela seguridad |
| 12 | 60K030018 | 2 | O-ring | joint torique | O Ring | anel-O | anillo-O |
| 13 | 60K040104 | 1 | O-ring | joint torique | O Ring | anel-O | anillo-O |
| 14 | 40K000002 | 2 | Plug | bouchon | Stopfen | bujão | tapón |
| 15 | [2]§--------- | 1 | Piston | piston | Kolben | pistão | pistón |

[1] Inc 1, 2, 4, 9, 12 & 15

[2] See A
[2] Voir A
[2] Siehe A
[2] Veja A
[2] Véase A

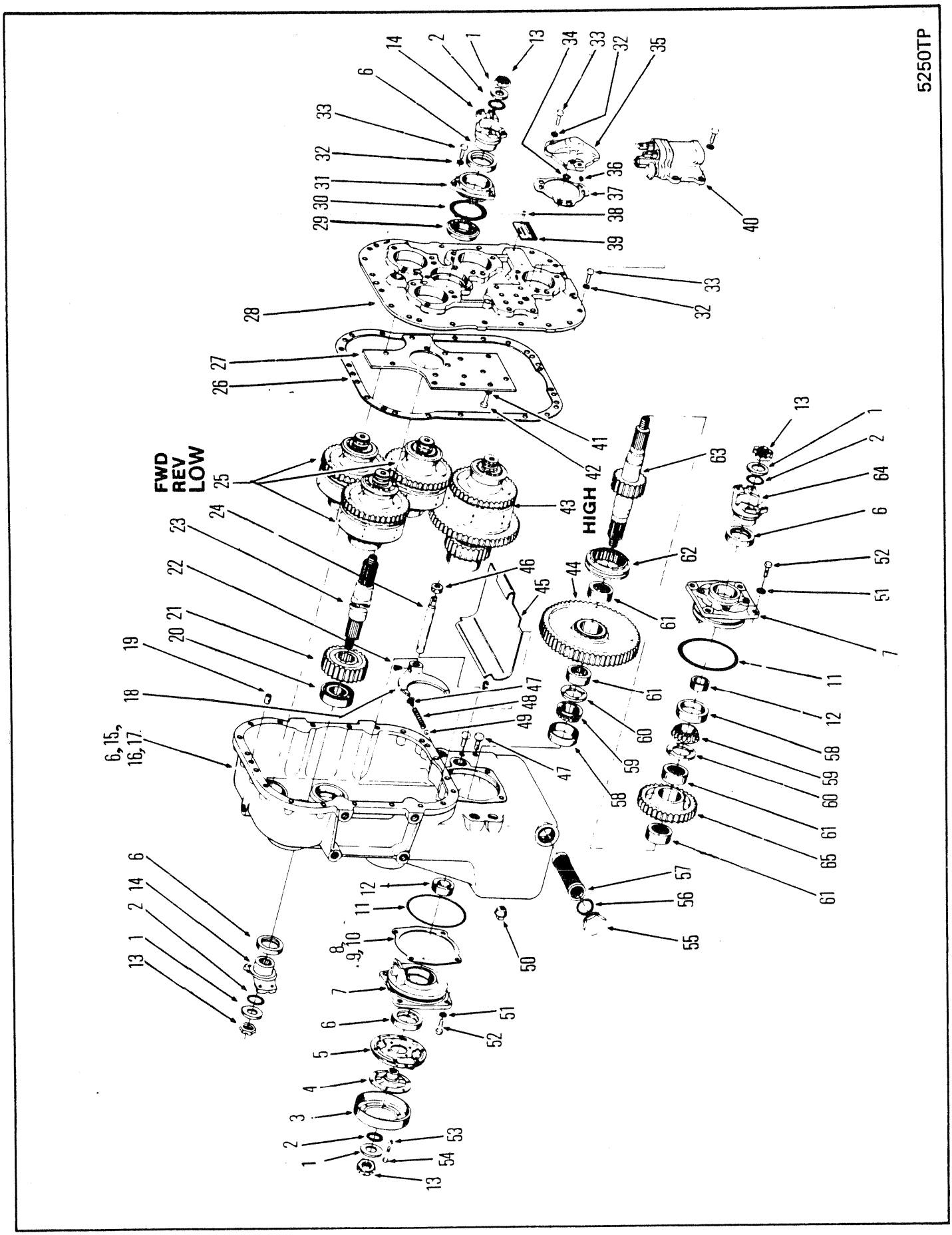
5250TP
FWD
REV
LOW
HIGH

# TRANSMISSION ASSEMBLY - 2420
# TRANSMISSION ENSEMBLE - 2420
# GETRIEBE VOLLSTÄNDIG - 2420
# TRANSMISSÃO, CONJUNTO - 2420
# TRANSMISIÓN, CONJUNTO - 2420

| No. | Part No. | Qty | Description | Description | Benennung | Descrição | Descripción |
|---|---|---|---|---|---|---|---|
| A | [1]282475 | 1 | Trans assy | bote vitesse ens | Getriebe vollst | transmissão conj | transmisión |
| 1 | 102745 | 4 | Washer | rondelle | Scheibe | arruela | arandela |
| 2 | 25K040112 | 4 | O-ring | joint torique | O Ring | anel-O | anillo-O |
| 3 | [3]O------ | 1 | Drum | tambour | Trommel | tambor | tambor |
| 4 | 215550 | 1 | Flange | bride | Flansch | flange | brida |
| 5 | [3]O------ | 1 | Backing plate | plaque de renfort | Stützplatte | placa de apoio | chapa soporte |
| 6 | 206864 | 5 | Seal oil | jnt étanchéité huile | Idichtung | vedação de óleo | sello de aceite |
| 7 | 215155 | 2 | Cap | chapeau | Kappe | tampa | tapa |
| 8 | ‡215156 | - | Shim .004 | cale-0,10MM | Beilage-0,10MM | calço-0,10MM | planchita-0,10MM |
| 9 | ‡215157 | - | Shim .007 | cale-0,18MM | Beilage-0,18MM | calço-0,18MM | planchita-0,18MM |
| 10 | ‡215158 | - | Shim .010 | cale-0,25MM | Beilage-0,25MM | calço-0,25MM | planchita-0,25MM |
| 11 | 25K040524 | 2 | O-ring | joint torique | O Ring | anel-O | anillo-O |
| 12 | 215162 | 2 | Spacer | entretoise | Distanzteil | espaçador | espaciador |
| 13 | 216058 | 4 | Nut | écrou | Mutter | porca | tuerca |
| 14 | 215702 | 2 | Flange,output | bride sortie | Flansche Ausgangs | flange saida | platina salida |
| 15 | 218353 | 1 | Plug | bouchon | Stopfen | bujão | tapón |
| 16 | 801363 | 1 | Trans case | carter de trans | Getribegenhäuse | caixa de transmis | caja transmisión |
| 17 | 14F000016 | 3 | Plug | bouchon | Stopfen | bujão | tapón |
| 18 | 215146 | 1 | Fork | fourche | Gabel | garfo | horquilla |
| 19 | 214295 | 2 | Pin | goupille | Stift | pino | pasador |
| 20 | 225603 | 1 | Bearing | palier | Lager | mancal | cojinete |
| 21 | 215166 | 1 | Gear | engrenage | Zahnrad | engrenagem | engranaje |
| 22 | 201566 | 1 | Bolt | boulon | Bolzen | parafuso | bulón |
| 23 | 217952 | 1 | Shaft | arbre | Welle | ávore | árbol |
| 24 | 215145 | 1 | Rail | barre | Gelnder | trilho | riel |
| 25 | O------ | 1 | Clutch assy | embrayage ens | Kupplung vollst | embreagem conj | embrage conj |
| 26 | 215144 | 1 | Gasket | garniture | Dichtung | gaxeta | empaquetadura |
| 27 | 215143 | 1 | Plate | plaque | Platte | placa | placa |
| 28 | [1]215141 | 1 | Cover | couvercle | Deckel | tampa | tapa |
| 29 | 225824 | 1 | Bearing | palier | Lager | mancal | cojinete |
| 30 | 25K040316 | 1 | O-ring | joint torique | O Ring | anel-O | anillo-O |
| 31 | [2]215198 | 1 | Cap | chapeau | Kappe | tampa | tapa |
| 32 | 4E0000007 | 35 | Lockwasher | rondelle frein | Sicherungsscheibe | arruela de pressão | arandela seguridad |
| 33 | 1C0000718 | 35 | Bolt | boulon | Bolzen | parafuso | bulón |
| 34 | 25K030016 | 4 | O-ring | joint torique | O Ring | anel-O | anillo-O |
| 35 | 215163 | 4 | Cap | chapeau | Kappe | tampa | tapa |
| 36 | 16F000006 | 4 | Plug | bouchon | Stopfen | bujão | tapón |
| 37 | 215164 | 4 | Gasket | garniture | Dichtung | gaxeta | empaquetadura |
| 38 | 207873 | 2 | Screw | vis | Schraube | parafuso | tornillo |
| 39 | 221391 | 1 | Name plate | plaque duconstructr | Namensschild | placa do nome | placa de nombre |
| 40 | O-------- | 1 | Control valve | soupape de contrôle | Steurventil | válv de contr | valv de control |
| 41 | 5E0000006 | 15 | Lockwasher | rondelle frein | Sicherungsscheibe | arruela de pressão | arandela seguridad |
| 42 | 1C0000614 | 15 | Bolt | boulon | Bolzen | parafuso | bulón |
| 43 | O-------- | 1 | Clutch-high | embrayage-haut | Kupplung-hoch | embreagem-alta | embrague-alta |
| 44 | 228068 | 1 | Gear | engrenage | Zahnrad | engrenagem | engranaje |
| 45 | 228943 | 1 | Plate | plaque | Platte | placa | placa |

[1] Inc 27, 43 & 46

[2] Inc 14

[3] Ref A7 15000 & A7 15050

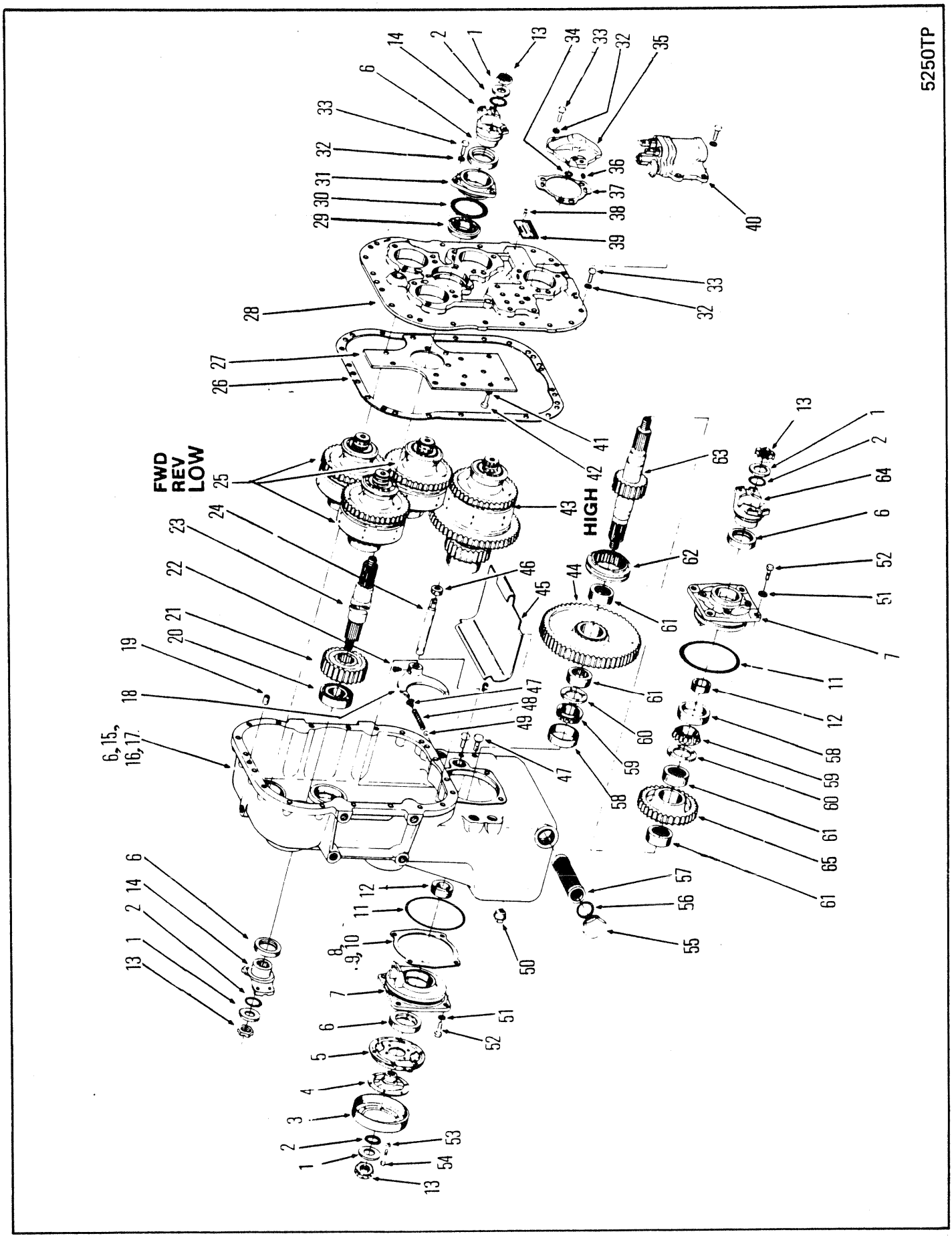
5250TP
FWD
REV
LOW
HIGH

# TRANSMISSION ASSEMBLY - 2420
# TRANSMISSION ENSEMBLE - 2420
# GETRIEBE VOLLSTÄNDIG - 2420
# TRANSMISSÃO, CONJUNTO - 2420
# TRANSMISIÓN, CONJUNTO - 2420

| No. | Part No. | Qty | Description | Description | Benennung | Descrição | Descripción |
|---|---|---|---|---|---|---|---|
| 46 | **239892** | 1 | Seal | joint étanchéité | Dichtung | vedador | sello |
| 47 | **40K000004** | 3 | Plug | bouchon | Stopfen | bujão | tapón |
| 48 | **215191** | 1 | Spring | ressort | Feder | mola | resorte |
| 49 | **10J000012** | 1 | Ball | bille | Kugel | esfera | bola |
| 50 | **215757** | 1 | Plug | bouchon | Stopfen | bujão | tapón |
| 51 | **5E0000008** | 8 | Lockwasher | rondelle frein | Sicherungsscheibe | arruela de pressão | arandela seguridad |
| 52 | **1C0000820** | 8 | Bolt | boulon | Bolzen | parafuso | bulón |
| 53 | **4E0000006** | 6 | Lockwasher | rondelle frein | Sicherungsscheibe | arruela de pressão | arandela seguridad |
| 54 | **2C0000612** | 6 | Bolt | boulon | Bolzen | parafuso | bulón |
| 55 | **219370** | 1 | Plug | bouchon | Stopfen | bujão | tapón |
| 56 | **219373** | 1 | Gasket | garniture | Dichtung | gaxeta | empaquetadura |
| 57 | **215205** | 1 | Screen | crible | Sieb | tela | tamiz |
| 58 | **675544** | 2 | Cup | cuvette | Schale | capa | cubeta |
| 59 | **675548** | 2 | Cone | cône | Kegel | cone | cono |
| 60 | **215154** | 2 | Thrust washer | rondelle pouss | Ritzeldruck | arruela empuxo | arandela empuje |
| 61 | **225079** | 4 | Bearing | palier | Lager | mancal | cojinete |
| 62 | **215149** | 1 | Hub | moyeu | Nabe | cubo | cubo |
| 63 | **215551** | 1 | Shaft | arbre | Welle | ávore | árbol |
| 64 | **214985** | 2 | Flange | bride | Flansch | flange | brida |
| 65 | **228069** | 1 | Gear | engrenage | Zahnrad | engrenagem | engranaje |

[1] Inc 27, 43 & 46

[2] Inc 14

[3] Ref A7 15000 & A7 15050

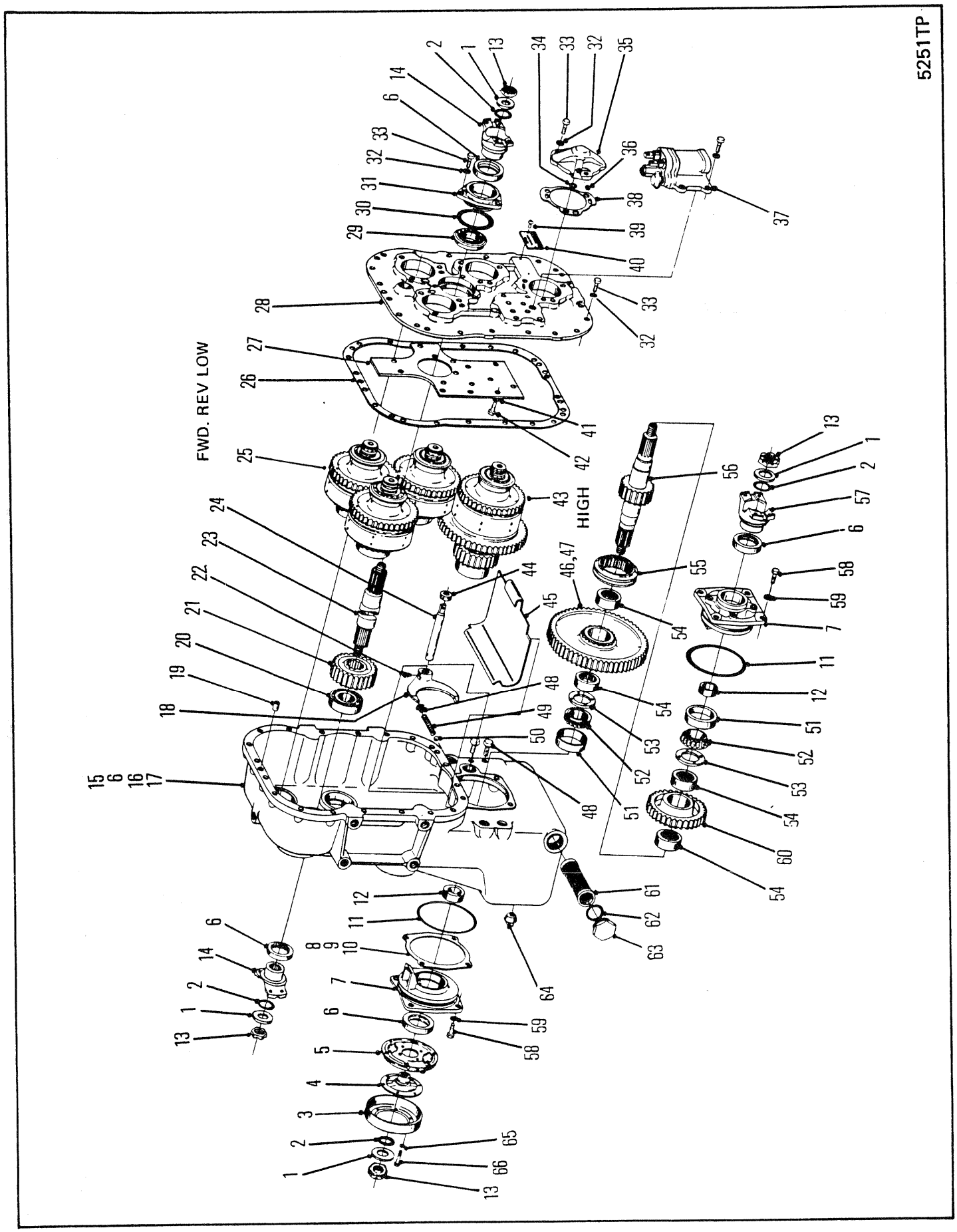
5251TP
FWD. REV LOW
HIGH

# TRANSMISSION ASSEMBLY - 2420
# TRANSMISSION ENSEMBLE - 2420
# GETRIEBE VOLLSTÄNDIG - 2420
# TRANSMISSÃO, CONJUNTO - 2420
# TRANSMISIÓN, CONJUNTO - 2420

| No. | Part No. | Qty | Description | Description | Benennung | Descrição | Descripción |
|---|---|---|---|---|---|---|---|
| A | [6]284106 | 2 | Trans assy | bote vitesse ens | Getriebe vollst | transmissão conj | transmisión |
| 1 | 102745 | 4 | Washer | rondelle | Scheibe | arruela | arandela |
| 2 | 25K040112 | 4 | O-ring | joint torique | O Ring | anel-O | anillo-O |
| 3 | [6]O-------- | 1 | Drum brake | tambour frein | Trommel Brems | tambor freio | tambor freno |
| 4 | 215550 | 1 | Flange | bride | Flansch | flange | brida |
| 5 | [6]-------- | 1 | Backing plate | plaque de renfort | Stützplatte | placa de apoio | chapa soporte |
| 6 | 206864 | 5 | Seal oil | jnt étanchéité huile | Idichtung | vedação de óleo | sello de aceite |
| 7 | 215155 | 2 | Cap | chapeau | Kappe | tampa | tapa |
| 8 | ‡215156 | - | Shim .004 | cale-0,10MM | Beilage-0,10MM | calço-0,10MM | planchita-0,10MM |
| 9 | ‡215157 | - | Shim .007 | cale-0,18MM | Beilage-0,18MM | calço-0,18MM | planchita-0,18MM |
| 10 | ‡215158 | - | Shim .010 | cale-0,25MM | Beilage-0,25MM | calço-0,25MM | planchita-0,25MM |
| 11 | 25K040524 | 2 | O-ring | joint torique | O Ring | anel-O | anillo-O |
| 12 | 215162 | 2 | Spacer | entretoise | Distanzteil | espaçador | espaciador |
| 13 | 216058 | 4 | Nut | écrou | Mutter | porca | tuerca |
| 14 | 215702 | 2 | Flange,output | bride sortie | Flansche Ausgangs | flange saida | platina salida |
| 15 | †14F000016 | 3 | Plug | bouchon | Stopfen | bujão | tapón |
| 16 | †218353 | 1 | Plug | bouchon | Stopfen | bujão | tapón |
| 17 | [1]801363 | 1 | Trans case | carter de trans | Getribegenhäuse | caixa de transmis | caja transmisión |
| 18 | 215146 | 1 | Fork | fourche | Gabel | garfo | horquilla |
| 19 | 214295 | 2 | Pin | goupille | Stift | pino | pasador |
| 20 | 225603 | 1 | Bearing | palier | Lager | mancal | cojinete |
| 21 | 215166 | 1 | Gear | engrenage | Zahnrad | engrenagem | engranaje |
| 22 | 201566 | 1 | Bolt | boulon | Bolzen | parafuso | bulón |
| 23 | 217952 | 1 | Shaft | arbre | Welle | ávore | árbol |
| 24 | 215145 | 1 | Rail | barre | Gelnder | trilho | riel |
| 25 | O------ | 3 | Clutch assy | embrayage ens | Kupplung vollst | embreagem conj | embrage conj |
| 26 | 215144 | 1 | Gasket | garniture | Dichtung | gaxeta | empaquetadura |
| 27 | 215143 | 1 | Plate | plaque | Platte | placa | placa |
| 28 | [2]215141 | 1 | Cover | couvercle | Deckel | tampa | tapa |
| 29 | 225824 | 1 | Bearing | palier | Lager | mancal | cojinete |
| 30 | 25K040316 | 1 | O-ring | joint torique | O Ring | anel-O | anillo-O |
| 31 | [3]215198 | 1 | Cap | chapeau | Kappe | tampa | tapa |
| 32 | 4E000007 | 35 | Lockwasher | rondelle frein | Sicherungsscheibe | arruela de pressão | arandela seguridad |
| 33 | 1C000718 | 15 | Bolt | boulon | Bolzen | parafuso | bulón |
| 34 | 25K030016 | 4 | O-ring | joint torique | O Ring | anel-O | anillo-O |
| 35 | 215163 | 4 | Cap | chapeau | Kappe | tampa | tapa |
| 36 | 16F000006 | 4 | Plug | bouchon | Stopfen | bujão | tapón |
| 37 | O------ | 1 | Control valve | soupape de contrôle | Steurventil | válv de contr | valv de control |
| 38 | 215164 | 4 | Gasket | garniture | Dichtung | gaxeta | empaquetadura |
| 39 | 207873 | 2 | Screw | vis | Schraube | parafuso | tornillo |
| 40 | 221391 | 1 | Name plate | plaque duconstructr | Namensschild | placa do nome | placa de nombre |

[1] Inc 6 & 15➡17

[2] Inc 27, 43 & 44

[3] Inc 14

[4] Inc 29 & 46

[5] Inc 12 & 37

[6] Ref Drum Brake
[6] Ref Tambour Frein
[6] Ref Trommel Brems
[6] Ref Tambor Freio
[6] Ref Tambor Freno

[7] See item 47
[7] Voir 47
[7] Siehe 47
[7] Veja 47
[7] Véase 47

| | |
|---|---|
| 666CUM | 500E-101-CAC➡500G-9999-CAC |
| 666GM | 513E-101-CAC➡513G-9999-CAC |
| 666GMGR | 515A-101-CAC➡515A-9999-CAC |

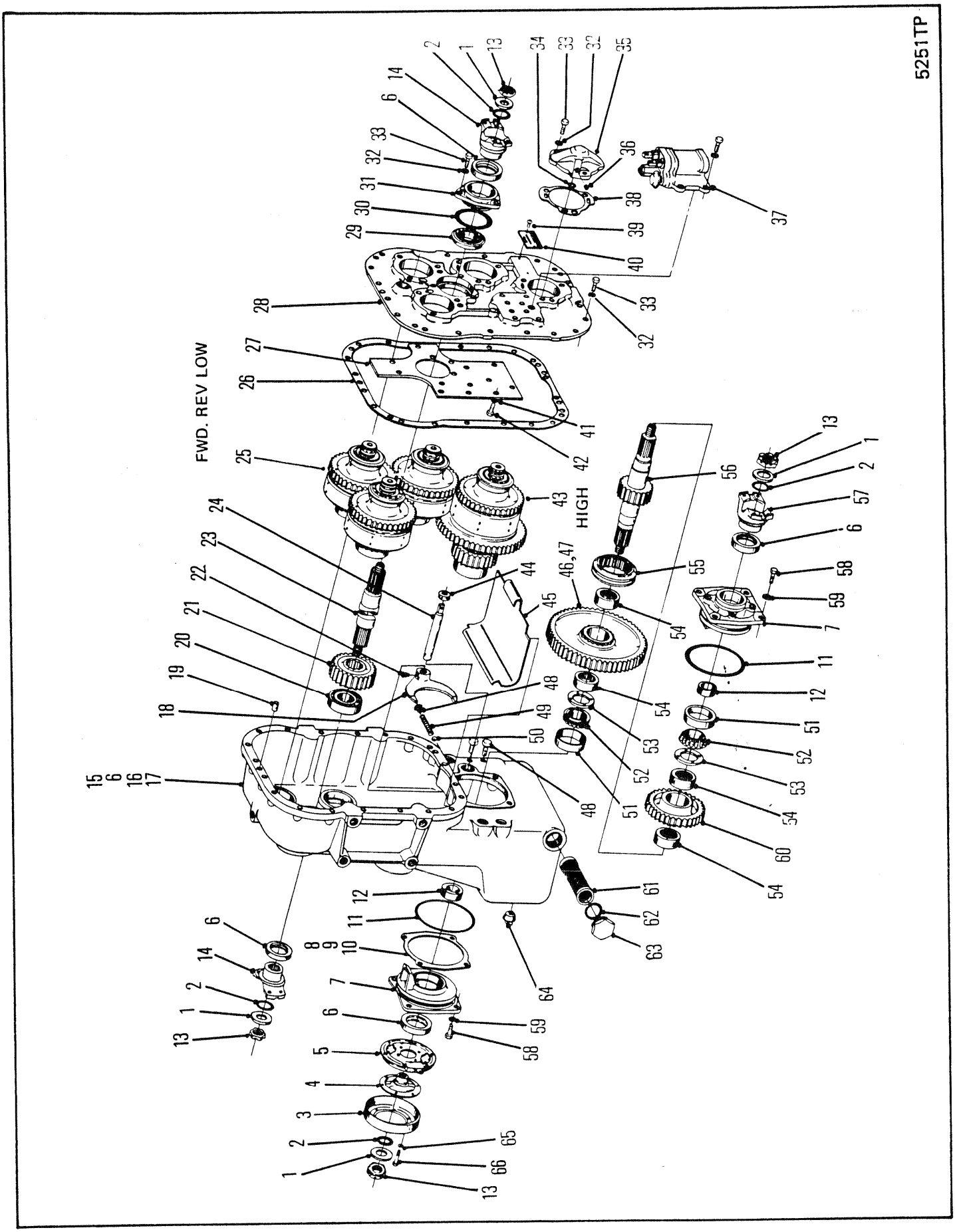
5251TP
FWD. REV LOW
HIGH

# TRANSMISSION ASSEMBLY - 2420
# TRANSMISSION ENSEMBLE - 2420
# GETRIEBE VOLLSTÄNDIG - 2420
# TRANSMISSÃO, CONJUNTO - 2420
# TRANSMISIÓN, CONJUNTO - 2420

| No. | Part No. | Qty | Description | Description | Benennung | Descrição | Descripción |
|---|---|---|---|---|---|---|---|
| 41 | **5E000006** | 15 | Lockwasher | rondelle frein | Sicherungsscheibe | arruela de pressão | arandela seguridad |
| 42 | **1C000614** | 15 | Bolt | boulon | Bolzen | parafuso | bulón |
| 43 | ○-------- | 1 | Clutch-high | embrayage-haut | Kupplung-hoch | embreagem-alta | embrague-alta |
| 44 | **239892** | 1 | Seal | joint étanchéité | Dichtung | vedador | sello |
| 45 | **228943** | 1 | Plate | plaque | Platte | placa | placa |
| 46 | [7]**228068** | 1 | Gear | engrenage | Zahnrad | engrenagem | engranaje |
| 47 | [4]**215150** | 1 | Gear assy | ens engrenage | Zahnradsatz | conj engrenagem | conj engranaje |
| 48 | **40K000004** | 3 | Plug | bouchon | Stopfen | bujão | tapón |
| 49 | **215191** | 1 | Spring | ressort | Feder | mola | resorte |
| 50 | **10J000012** | 1 | Ball | bille | Kugel | esfera | bola |
| 51 | **675544** | 2 | Cup | cuvette | Schale | capa | cubeta |
| 52 | **675548** | 2 | Cone | cône | Kegel | cone | cono |
| 53 | **215154** | 2 | Thrust washer | rondelle pouss | Ritzeldruck | arruela empuxo | arandela empuje |
| 54 | **225079** | 4 | Bearing | palier | Lager | mancal | cojinete |
| 55 | **215149** | 1 | Hub | moyeu | Nabe | cubo | cubo |
| 56 | **215551** | 1 | Shaft | arbre | Welle | ávore | árbol |
| 57 | **214985** | 1 | Flange | bride | Flansch | flange | brida |
| 58 | **1C000820** | 8 | Screw | vis | Schraube | parafuso | tornillo |
| 59 | **5E000008** | 8 | Lockwasher | rondelle frein | Sicherungsscheibe | arruela de pressão | arandela seguridad |
| 60 | [5]**228069** | 1 | Gear | engrenage | Zahnrad | engrenagem | engranaje |
| 61 | **215205** | 1 | Screen | crible | Sieb | tela | tamiz |
| 62 | **219373** | 1 | Gasket | garniture | Dichtung | gaxeta | empaquetadura |
| 63 | **219370** | 1 | Plug | bouchon | Stopfen | bujão | tapón |
| 64 | **215757** | 1 | Plug | bouchon | Stopfen | bujão | tapón |
| 65 | **4E000006** | 6 | Lockwasher | rondelle frein | Sicherungsscheibe | arruela de pressão | arandela seguridad |
| 66 | **2C000612** | 6 | Bolt | boulon | Bolzen | parafuso | bulón |

[1] Inc 6 & 15➞17

[2] Inc 27, 43 & 44

[3] Inc 14

[4] Inc 29 & 46

[5] Inc 12 & 37

[6] Ref Drum Brake
[6] Ref Tambour Frein
[6] Ref Trommel Brems
[6] Ref Tambor Freio
[6] Ref Tambor Freno

[7] See item 47
[7] Voir 47
[7] Siehe 47
[7] Veja 47
[7] Véase 47

666CUM 500E-101-CAC➞500G-9999-CAC
666GM 513E-101-CAC➞513G-9999-CAC
666GMGR 515A-101-CAC➞515A-9999-CAC

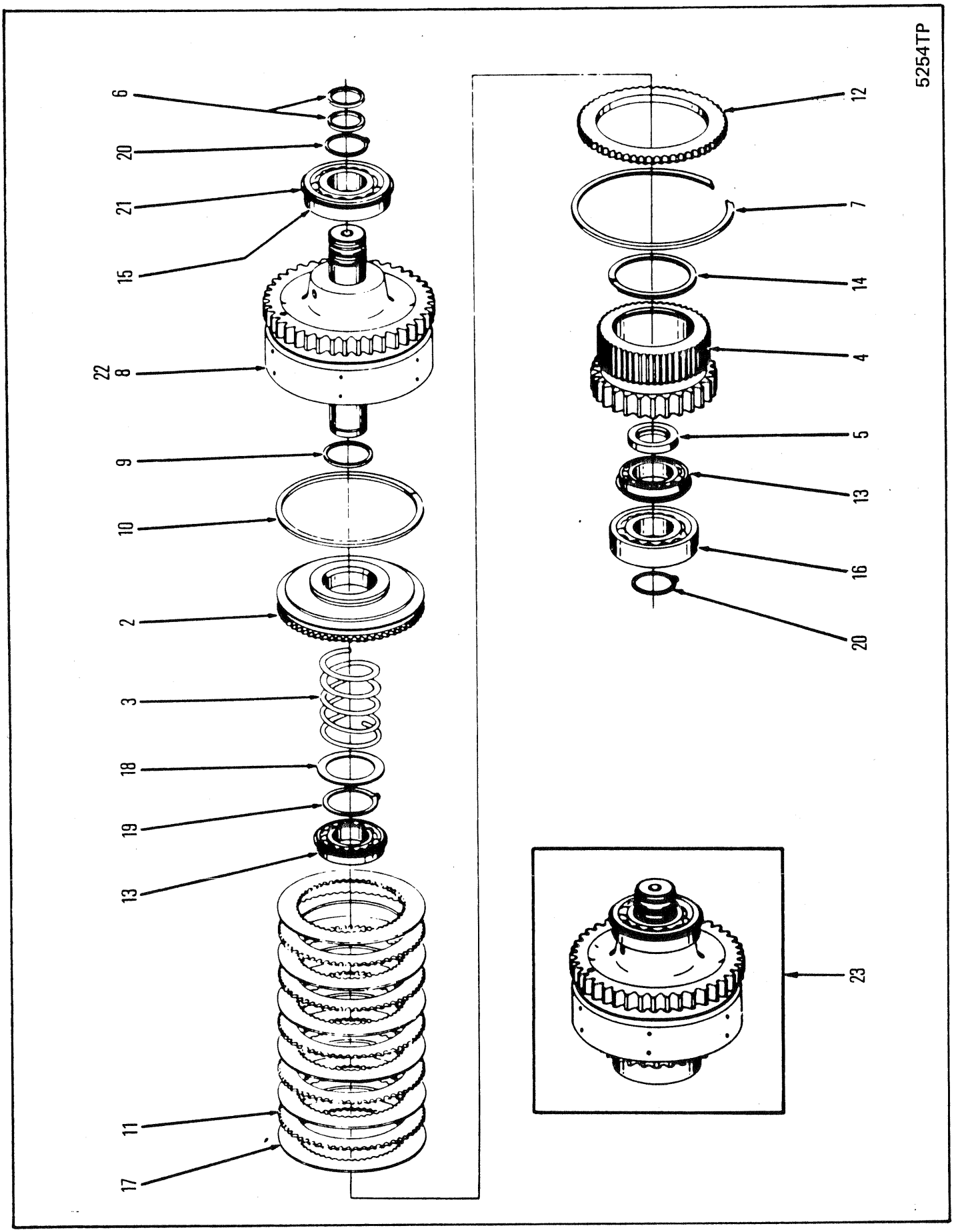
5254TP
6
20
21
15
22
8
9
10
2
3
18
19
13
11
17
12
7
14
4
5
13
16
20
23

# TRANSMISSION CLUTCH ASSEMBLY - FORWARD, REVERSE & LOW
# ENSEMBLE D'EMBRAYAGE DE BOÎTE DE VITESSE - MARCH AV & AR & BASSE
# GETRIEBE KUPPLUNGSBAUGRUPPE - VORWÄRTS, RÜCKWARTS & ERSTE
# CONJUNTO EMBREAGEM DA TRANSMISSÃO - MARCHA À FRENTE & À RÉ & BAIXA
# CONJUNTO TRANSMISIÓN-EMBRAGUE - MARCHA ADELANTE, RETROCESO & BAJA

| No. | Part No. | Qty | Description | Description | Benennung | Descrição | Descripción |
|---|---|---|---|---|---|---|---|
| 1 | †215176 | 1 | Seat | sige | Sitz | assento | asiento |
| 2 | 215177 | 1 | Piston | piston | Kolben | pistão | pistón |
| 3 | 215179 | 1 | Spring | ressort | Feder | mola | resorte |
| 4 | 215180 | 1 | Gear&hub assy | ens engren&moyeu | Zahnrad&nabe vollst | engren&cubo conj | engran&cubo conj |
| 5 | 215182 | 1 | Spacer | entretoise | Distanzteil | espaçador | espaciador |
| 6 | 215183 | 2 | Ring | anneau | Ring | anel | anillo |
| 7 | 215190 | 1 | Ring | anneau | Ring | anel | anillo |
| 8 | [1]215663 | 1 | Clutch drum | tambour dembrayage | Kupplungstrommel | tambor da embreagem | tambor del embrague |
| 9 | 223085 | 1 | Ring | anneau | Ring | anel | anillo |
| 10 | 224771 | 1 | Ring | anneau | Ring | anel | anillo |
| 11 | 224772 | 5 | Clutch disc | disque dembrayage | Kupplungsscheibe | disco da embreagem | disco de embrague |
| 12 | 224774 | 1 | End plate | plaque dextrémité | Endplatte | placa terminal | placa extrema |
| 13 | 225076 | 2 | Bearing | palier | Lager | mancal | cojinete |
| 14 | 225077 | 1 | Ring | anneau | Ring | anel | anillo |
| 15 | [2]225602 | 1 | Bearing | palier | Lager | mancal | cojinete |
| 16 | 225603 | 1 | Bearing | palier | Lager | mancal | cojinete |
| 17 | 238313 | 6 | Clutch disc | disque dembrayage | Kupplungsscheibe | disco da embreagem | disco de embrague |
| 18 | 616848 | 1 | Washer | rondelle | Scheibe | arruela | arandela |
| 19 | 654613 | 1 | Ring | anneau | Ring | anel | anillo |
| 20 | 659065 | 2 | Ring | anneau | Ring | anel | anillo |
| 21 | 945374 | 1 | Ring | anneau | Ring | anel | anillo |
| 22 | †10J000006 | 1 | Ball | bille | Kugel | esfera | bola |
| 23 | [3]§--------- | 1 | Clutch assy | embrayage ens | Kupplung vollst | embreagem conj | embrage conj |

[1] Inc 1 & 22

[2] Inc 21

[3] This group is used 3 times in transmission - Quantities listed are for 1 Clutch
[3] Ce groupe est utilisé trois fois dan la boite de vitesse - Les quantités indiquées ci-dessous son pour 1 groupe d'embrayage
[3] Diese Gruppe wird 3 Mal für Getriebe verwendet - Unten angeführte Stückzahlen sind
[3] Este grupo e usada 3 vèzes na transmissão - As quantidades abaixo são para 1 Embreagem
[3] Este grupo se usa 3veces en la transmisión - Las cantidades mencionadas abajo son para un Embrague

666GM 513E-101-CAC→513G-9999-CAC
666GMGR 515A-101-CAC→515A-9999-CAC

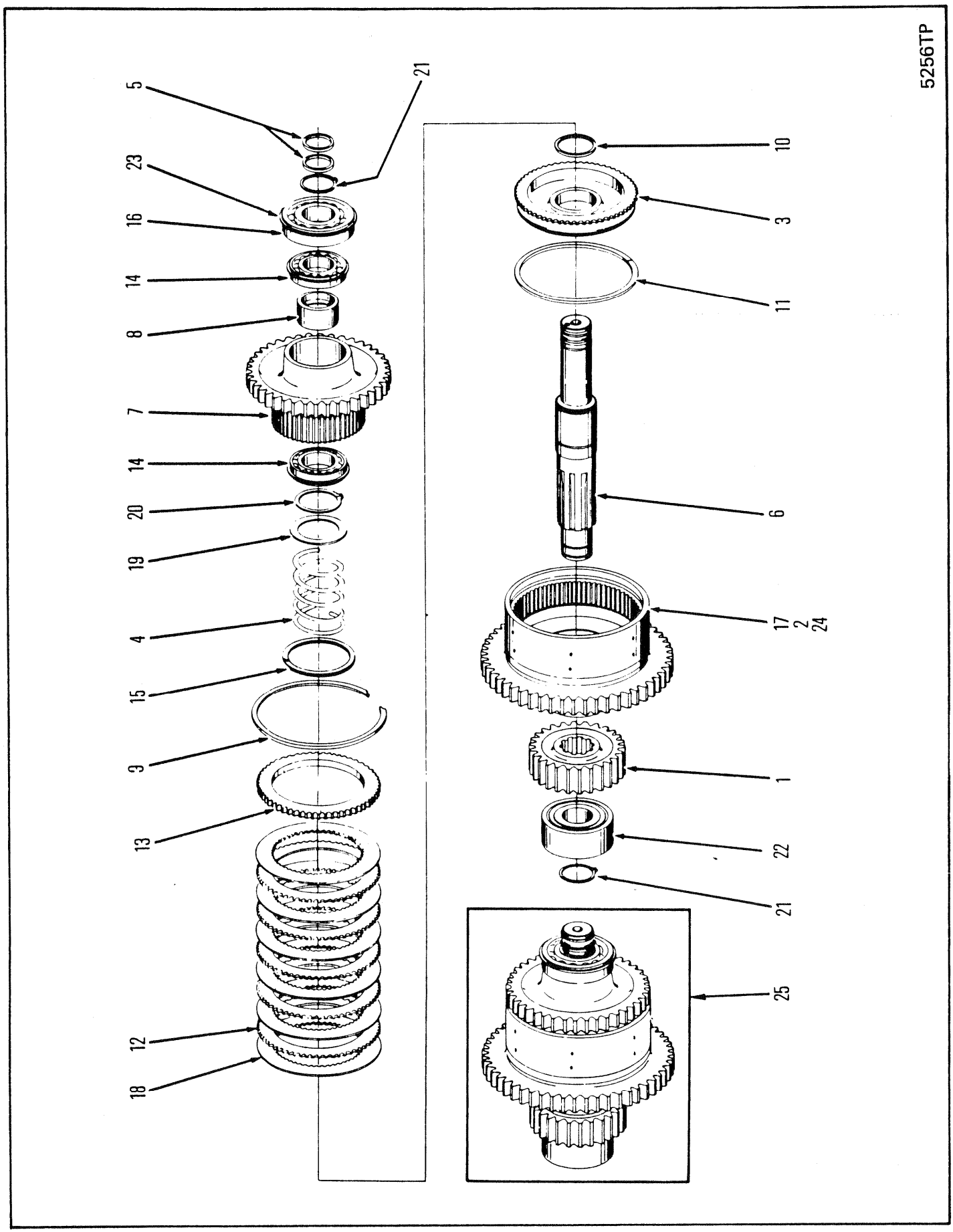
5256TP
5
23
16
14
8
7
14
20
19
4
15
3
13
12
18
21
10
3
11
6
17
2
24
1
22
21
25

# TRANSMISSION CLUTCH ASSEMBLY, HIGH
# ENSEMBLE D'EMBRAYAGE DE BOÏTE DE VITESSE, HAUT
# GETRIEBE-KUPPLUNGSBAUGRUPPE, HOCH
# CONJUNTO EMBREAGEM DA TRANSMISSÃO, ALTA
# CONJUNTO TRANSMISIÓN-EMBRAGUE, ALTA

| No. | Part No. | Qty | Description | Description | Benennung | Descrição | Descripción |
|---|---|---|---|---|---|---|---|
| 1 | **215166** | 1 | Gear (26T) | engrenage (26T) | Zahnrad (26T) | engrenagem (26T) | engranaje (26T) |
| 2 | [2]**215176** | 1 | Seat | sige | Sitz | assento | asiento |
| 3 | **215177** | 1 | Piston | piston | Kolben | pistão | pistón |
| 4 | **215179** | 1 | Spring | ressort | Feder | mola | resorte |
| 5 | **215183** | 2 | Ring | anneau | Ring | anel | anillo |
| 6 | **215184** | 1 | Shaft | arbre | Welle | ávore | árbol |
| 7 | **215188** | 1 | Hub&Gear | engren et moyeu | Zahnrad&Nable | engren&cubo | engran&cubo |
| 8 | **215189** | 1 | Spacer | entretoise | Distanzteil | espaçador | espaciador |
| 9 | **215190** | 1 | Ring | anneau | Ring | anel | anillo |
| 10 | **223085** | 1 | Ring | anneau | Ring | anel | anillo |
| 11 | **224771** | 1 | Ring | anneau | Ring | anel | anillo |
| 12 | **224772** | 5 | Disc outer | disque extérieur | Scheibe, aussen | disco exterior | disco externo |
| 13 | **224774** | 1 | Plate end | plaque dextrémité | Endplatte | placa terminal | placa extrema |
| 14 | **225076** | 2 | Bearing | palier | Lager | mancal | cojinete |
| 15 | **225077** | 1 | Ring | anneau | Ring | anel | anillo |
| 16 | [1]**225602** | 1 | Bearing | palier | Lager | mancal | cojinete |
| 17 | [2]**227952** | 1 | Drum&gear assy | ass tamb et sign | Trommel&Getr einh | cj engr e tambor | conj tamb y engr |
| 18 | **238313** | 6 | Clutch disc | disque dembrayage | Kupplungsscheibe | disco da embreagem | disco de embrague |
| 19 | **616848** | 1 | Washer | rondelle | Scheibe | arruela | arandela |
| 20 | **654613** | 1 | Ring retaining | bague darrêt | Haltering | anel retentor | anillo de retención |
| 21 | **659065** | 2 | Ring retaining | bague darrêt | Haltering | anel retentor | anillo de retención |
| 22 | **799595** | 1 | Bearing | palier | Lager | mancal | cojinete |
| 23 | **945374** | 1 | Ring retaining | bague darrêt | Haltering | anel retentor | anillo de retención |
| 24 | †**10J000006** | 1 | Ball | bille | Kugel | esfera | bola |
| 25 | §--------- | 1 | Clutch assy | embrayage ens | Kupplung vollst | embreagem conj | embrage conj |

[1] Inc 23

[2] Inc 2 & 24 (53T)

666CUM 500D-101-CAC→500G-9999-CAC
666GM 513E-101-CAC→513G-9999-CAC
666GMGR 515A-101-CAC→515A-9999-CAC

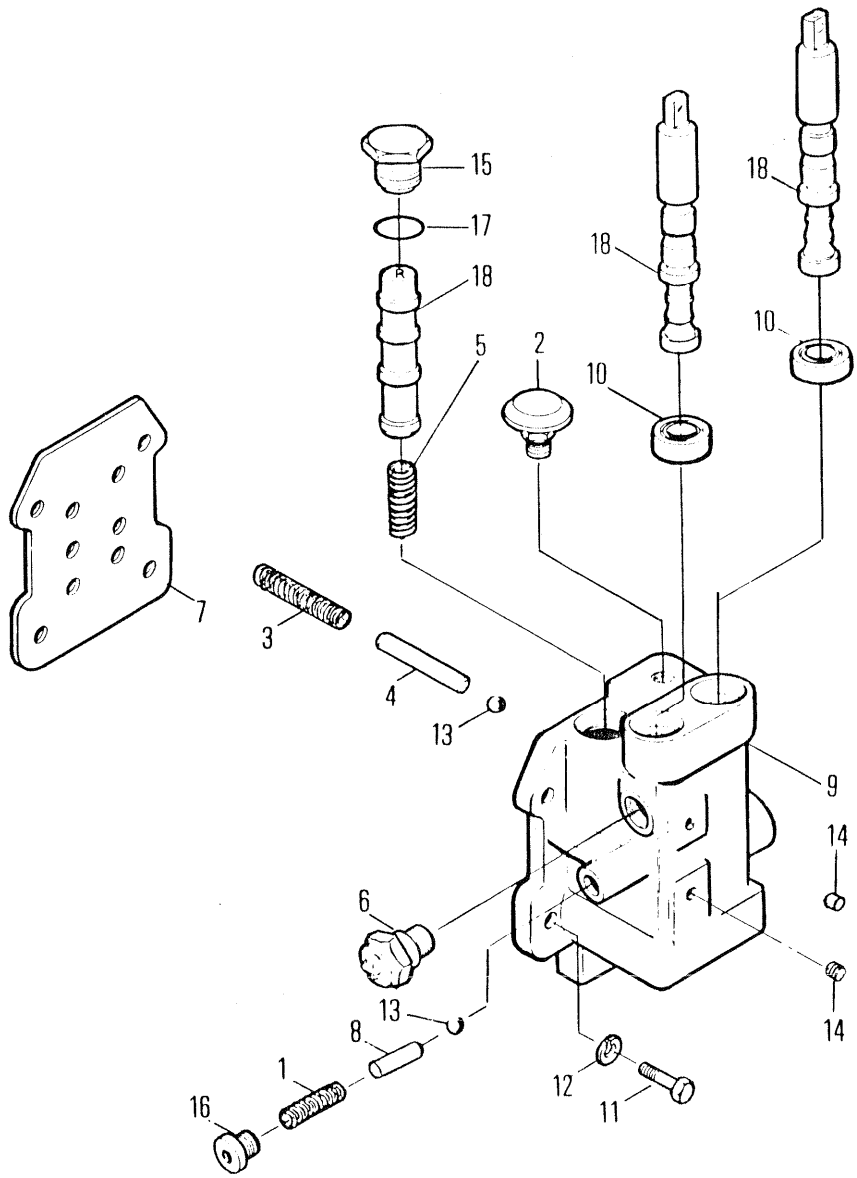


5259TP

# TRANSMISSION CONTROL VALVE
# SOUPAPE DE COMMANDE DE TRANSMISSION
# GETRIEBEREGELVENTIL
# VÁLVULA DE CONTRÔLE, TRANSMISSÃO
# VÁLVULA DE CONTROL DE TRANSMISIÓN

| No. | Part No. | Qty | Description | Description | Benennung | Descrição | Descripción |
|---|---|---|---|---|---|---|---|
| A | [2]229466 | 1 | Valve assy | soupape ens | Ventil vollst | válvula conj | válvula conj |
| 1 | 202200 | 1 | Spring | ressort | Feder | mola | resorte |
| 2 | 211433 | 1 | Air breather assy | ens du reniflard | Entlüfter vollst | conj respiradouro ar | conjunto aireador |
| 3 | 215147 | 1 | Spring | ressort | Feder | mola | resorte |
| 4 | 215194 | 1 | Pin | goupille | Stift | pino | pasador |
| 5 | 220363 | 1 | Spring | ressort | Feder | mola | resorte |
| 6 | 224620 | 1 | Switch | interrupteur | Schalter | interruptor | interruptor |
| 7 | 229009 | 1 | Gasket | garniture | Dichtung | gaxeta | empaquetadura |
| 8 | 229010 | 1 | Pin | goupille | Stift | pino | pasador |
| 9 | ------ | 1 | Housing | botier | Gehuse | carcaça | carcasa |
| 10 | 239892 | 1 | Seal | joint étanchéité | Dichtung | vedador | sello |
| 11 | 1C000718 | 4 | Bolt | boulon | Bolzen | parafuso | bulón |
| 12 | 4E000007 | 4 | Lockwasher | rondelle frein | Sicherungsscheibe | arruela de pressão | arandela seguridad |
| 13 | 10J000012 | 2 | Ball | bille | Kugel | esfera | bola |
| 14 | 16F000001 | 2 | Plug | bouchon | Stopfen | bujão | tapón |
| 15 | [3]24K000007 | 1 | Plug | bouchon | Stopfen | bujão | tapón |
| 16 | 47K000003 | 1 | Plug | bouchon | Stopfen | bujão | tapón |
| 17 | 91F000007 | 1 | O-ring | joint torique | O Ring | anel-O | anillo-O |
| 18 | [1,4]229006 | 1 | Spool | tiroir | Spule | carretel | carrete |

[1] For correct assembly spool must be installed with the letter R in the upright position
[1] Pour un montage correct, le tiroir doit être installé avec la lettre R en position verticale
[1] Spule muss mit dem Buchstaben R in aufgerichteter Position installiert werden
[1] Para montagem correta o carretel deve ser instalado com a letra R em posição vertical
[1] Para un montaje correcto, el manguito debe instalarse con la letra R en su posición vertical normal

[2] Inc 1➡20

[3] Inc 17

[4] See A
[4] Voir A
[4] Siehe A
[4] Veja A
[4] Véase A

666CUM 500D-101-CAC➡500G-9999-CAC
666GM 513E-101-CAC➡513G-9999-CAC

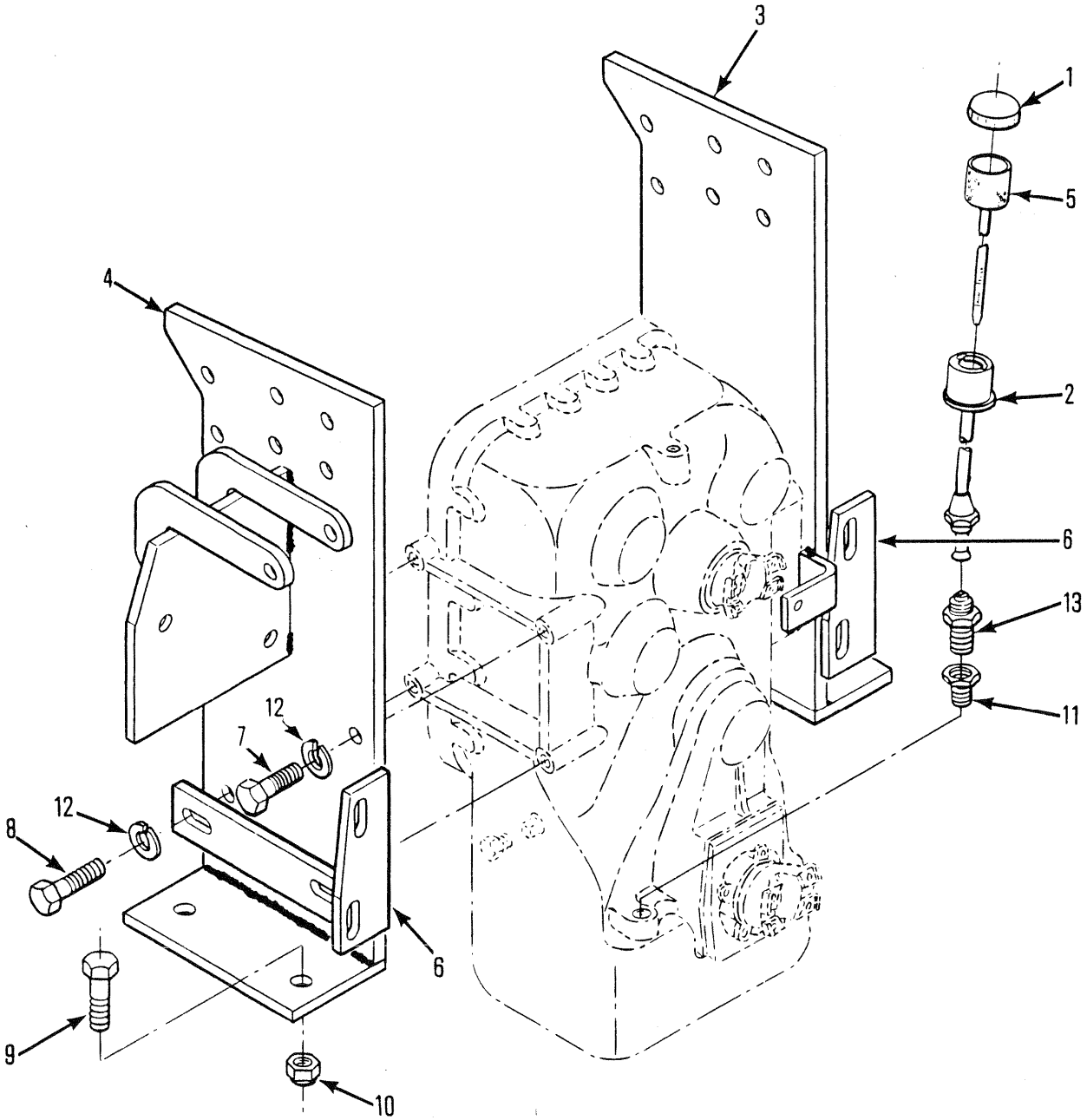
3
1
5
4
2
6
13
11
12
7
12
8
6
9
10
5261TP

# TRANSMISSION MOUNTING
# MONTAGE DE TRANSMISSION
# GETRIEBE-MONTAGE
# SUPORTE DA TRANSMISSÃO
# SOPORTE DE LA TRANSMISION

| No. | Part No. | Qty | Description | Description | Benennung | Descrição | Descripción |
|---|---|---|---|---|---|---|---|
| 1 | **539837** | 1 | Cap | chapeau | Kappe | tampa | tapa |
| 2 | **1900666** | 1 | Filler neck | goulot remplissage | Einfüllstutzen | tubo enchimento | tubo llenado |
| 3 | **1900885** | 1 | Bracket LH | support CG | Winkel L | grampo LE | grampa LD |
| 4 | **1900900** | 1 | Bracket RH | support CD | Winkel R | grampo LD | grampa LD |
| 5 | **1901380** | 1 | Dipstick assy | ass de la jauge | Tauchstabeinheit | cj vareta medição | conj cucharón |
| 6 | **1905442** | 2 | Bracket | support | Winkel | grampo | grampa |
| 7 | **17C001228** | 4 | Bolt | boulon | Bolzen | parafuso | bulón |
| 8 | **17C001232** | 4 | Bolt | boulon | Bolzen | parafuso | bulón |
| 9 | **17C001240** | 4 | Bolt | boulon | Bolzen | parafuso | bulón |
| 10 | **18D000012** | 4 | Nut | écrou | Mutter | porca | tuerca |
| 11 | **19F000009** | 1 | Bushing | chemise | Buchse | bucha | buje |
| 12 | **24E000012** | 8 | Lockwasher | rondelle frein | Sicherungsscheibe | arruela de pressão | arandela seguridad |
| 13 | **38F000011** | 1 | Fitting | ajustage | Verbindung | ajuste | accesorio |

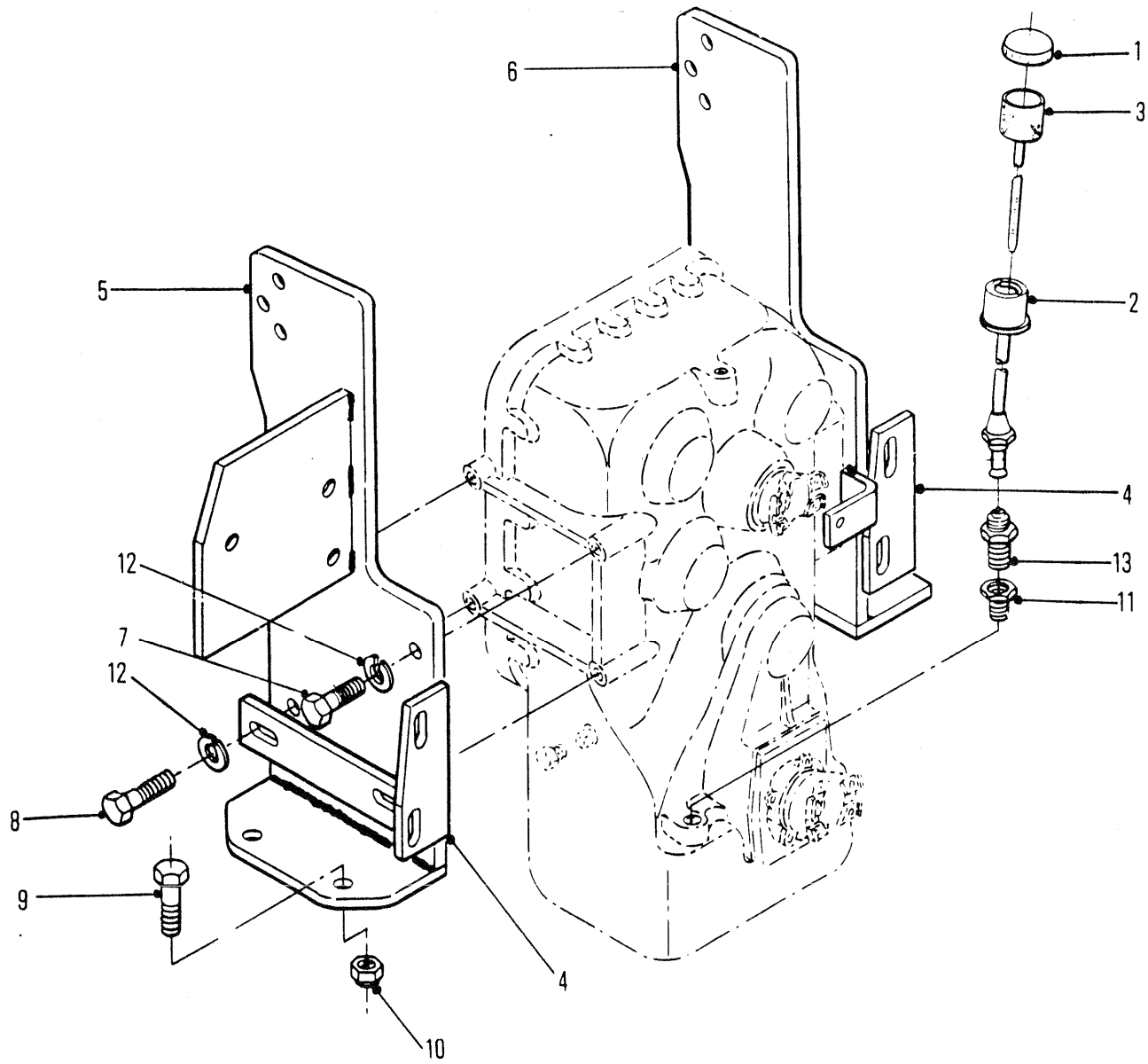


5263TP

# TRANSMISSION MOUNTING
# MONTAGE DE TRANSMISSION
# GETRIEBE-MONTAGE
# SUPORTE DA TRANSMISSÃO
# SOPORTE DE LA TRANSMISION

| No. | Part No. | Qty | Description | Description | Benennung | Descrição | Descripción |
|---|---|---|---|---|---|---|---|
| 1 | **539837** | 1 | Cap | chapeau | Kappe | tampa | tapa |
| 2 | **1900666** | 1 | Filler neck | goulot remplissage | Einfüllstutzen | tubo enchimento | tubo llenado |
| 3 | **1901380** | 1 | Dipstick assy | ass de la jauge | Tauchstabeinheit | cj vareta medição | conj cucharón |
| 4 | **1905442** | 2 | Bracket | support | Winkel | grampo | grampa |
| 5 | **1909834** | 1 | Bracket RH | support CD | Winkel R | grampo LD | grampa LD |
| 6 | **1915983** | 1 | Bracket LH | support CG | Winkel L | grampo LE | grampa LD |
| 7 | **17C001228** | 4 | Bolt | boulon | Bolzen | parafuso | bulón |
| 8 | **17C001232** | 4 | Bolt | boulon | Bolzen | parafuso | bulón |
| 9 | **18C001244** | 4 | Bolt | boulon | Bolzen | parafuso | bulón |
| 10 | **18D000012** | 4 | Nut | écrou | Mutter | porca | tuerca |
| 11 | **19F000009** | 1 | Bushing | chemise | Buchse | bucha | buje |
| 12 | **24E000012** | 8 | Lockwasher | rondelle frein | Sicherungsscheibe | arruela de pressão | arandela seguridad |
| 13 | **38F000011** | 1 | Fitting | ajustage | Verbindung | ajuste | accesorio |

666CUM 500E-101-CAC→500G-9999-CAC
666GM 513E-101-CAC→513G-9999-CAC
666GMGR 515A-101-CAC→515A-9999-CAC

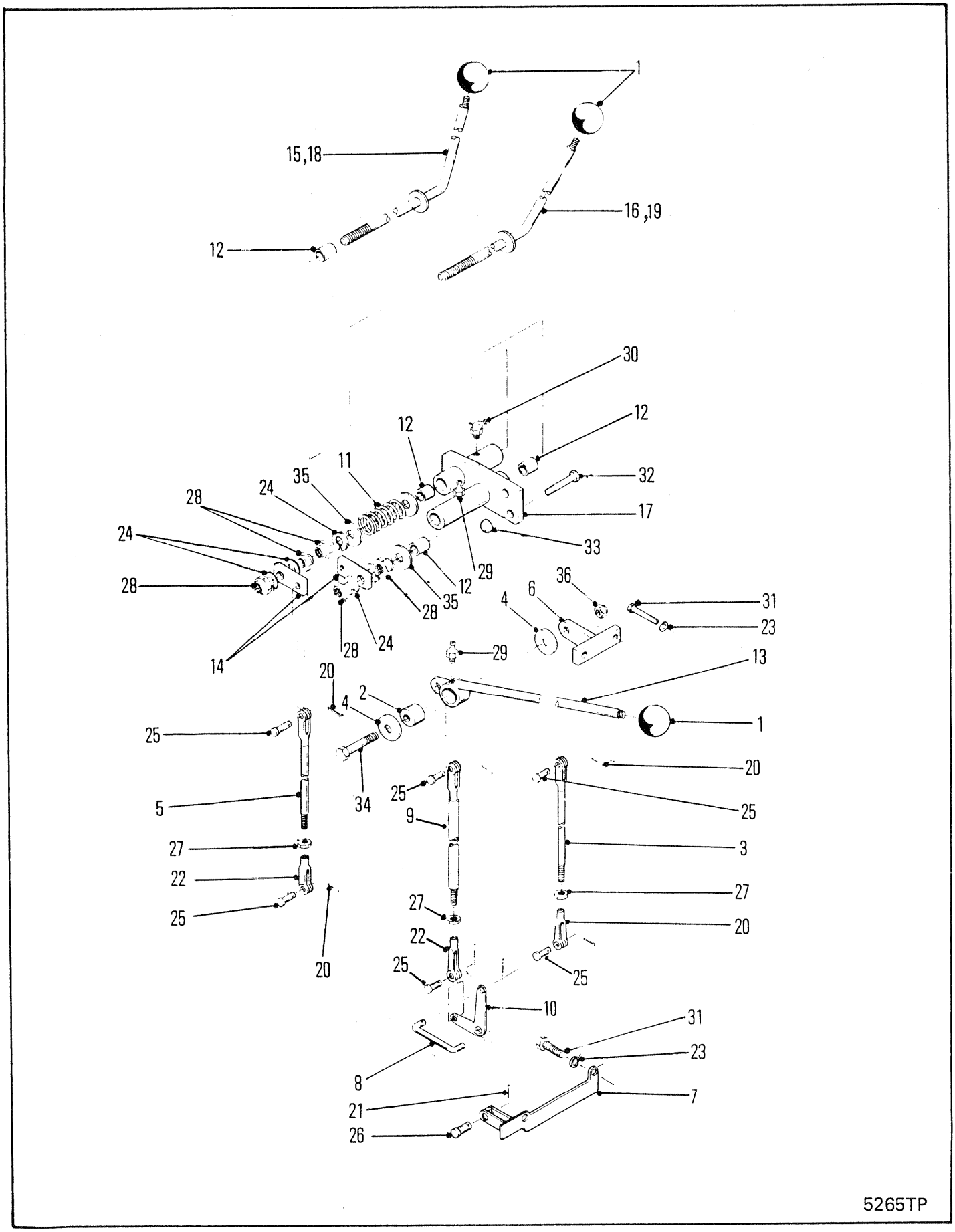
1
15,18
16,19
12
30
12
12
11
35
24
28
24
28
32
17
33
29
12
35
28
36
6
4
31
23
14
28
24
29
13
20
2
4
1
25
34
20
25
5
25
9
3
27
22
27
25
27
20
22
20
25
25
10
31
23
8
7
21
26
5265TP

# TRANSMISSION CONTROLS
# COMMANDES DE LA TRANSMISSION
# GETRIEBESCHALTHEBEL
# CONTROLES DA TRANSMISSÃO
# CONTROLES DE LA TRANSMISIÓN

| No. | Part No. | Qty | Description | Description | Benennung | Descrição | Descripción |
|---|---|---|---|---|---|---|---|
| 1 | **509772** | 3 | Knob | bouton | Knopf | manípula | botón |
| 2 | **585596** | 1 | Sleeve | manchon | Muffe | luva | manguito |
| 3 | **600007** | 1 | Rod | tige | Stange | varão | varilla |
| 4 | **616795** | 1 | Washer | rondelle | Scheibe | arruela | arandela |
| 5 | **1317198** | 1 | Rod | tige | Stange | varão | varilla |
| 6 | **1900491** | 1 | Bracket | support | Winkel | grampo | grampa |
| 7 | **1900497** | 1 | Bracket | support | Winkel | grampo | grampa |
| 8 | **1900501** | 1 | Link | articulation | Gelenk | articulação | articulación |
| 9 | **1900503** | 1 | Rod | tige | Stange | varão | varilla |
| 10 | **1900793** | 1 | Bellcrank | levier coudé | Kniehebel | balancinho | balancín |
| 11 | **1901345** | 1 | Spring | ressort | Feder | mola | resorte |
| 12 | **1901352** | 2 | Sleeve | manchon | Muffe | luva | manguito |
| 13 | **1901359** | 1 | Lever control | contrôle de levier | Hebelsteuerung | alavanca controle | control de palanca |
| 14 | **1902328** | 2 | Link | articulation | Gelenk | articulação | articulación |
| 15 | [1]**1902352** | 1 | Lever control | contrôle de levier | Hebelsteuerung | alavanca controle | control de palanca |
| 16 | [1]**1902353** | 1 | Lever control | contrôle de levier | Hebelsteuerung | alavanca controle | control de palanca |
| 17 | **1902356** | 1 | Bracket | support | Winkel | grampo | grampa |
| 18 | **1909816** | 1 | Lever control | contrôle de levier | Hebelsteuerung | alavanca controle | control de palanca |
| 19 | **1909817** | 1 | Lever control | contrôle de levier | Hebelsteuerung | alavanca controle | control de palanca |
| 20 | **1F0000312** | 7 | Pin | goupille | Stift | pino | pasador |
| 21 | **1F0000412** | 1 | Pin | goupille | Stift | pino | pasador |
| 22 | **2J0006208** | 3 | Clevis | étrier | Schkel | garfo | horquilla |
| 23 | **4E0000007** | 4 | Lockwasher | rondelle frein | Sicherungsscheibe | arruela de pressão | arandela seguridad |
| 24 | **4E0000010** | 5 | Lockwasher | rondelle frein | Sicherungsscheibe | arruela de pressão | arandela seguridad |
| 25 | **4F0006106** | 6 | Pin | goupille | Stift | pino | pasador |
| 26 | **4F080127** | 1 | Pin | goupille | Stift | pino | pasador |
| 27 | **8D0000006** | 3 | Nut | écrou | Mutter | porca | tuerca |
| 28 | **8D0000010** | 5 | Nut | écrou | Mutter | porca | tuerca |
| 29 | **10H000025** | 2 | Fitting grease | graisseur | Nippel Schmier | graxeira | grasera |
| 30 | **11H000015** | 1 | Fitting grease | graisseur | Nippel Schmier | graxeira | grasera |
| 31 | **17C000724** | 4 | Bolt | boulon | Bolzen | parafuso | bulón |
| 32 | **17C000828** | 2 | Bolt | boulon | Bolzen | parafuso | bulón |
| 33 | **17D000006** | 2 | Nut | écrou | Mutter | porca | tuerca |
| 34 | **18C000836** | 1 | Bolt | boulon | Bolzen | parafuso | bulón |
| 35 | **25E000025** | 3 | Washer | rondelle | Scheibe | arruela | arandela |
| 36 | **67D000008** | 1 | Nut | écrou | Mutter | porca | tuerca |

[1] □C-9044-101➡9999, C-9046-101➡9999, 500D-101➡9999

666CUM 500D-101-CAC➡500E-710-CAC
666GM 513E-101-CAC➡513E-805-CAC

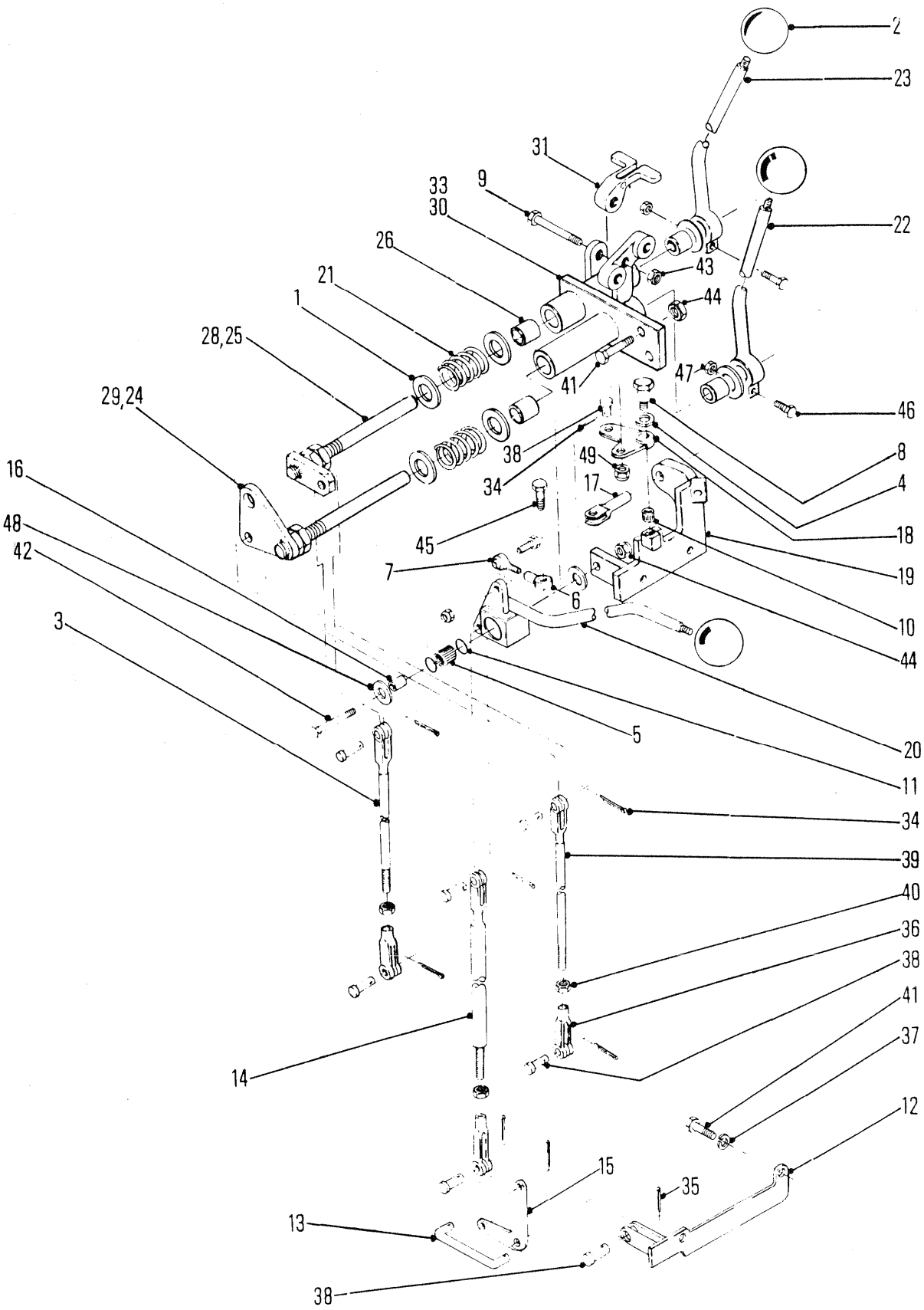
2
23
31
9
33
30
22
26
43
21
44
1
28,25
41
47
46
29,24
38
49
8
16
34
17
4
48
45
18
42
7
19
6
10
3
44
5
20
11
34
39
40
36
38
14
41
37
12
15
35
13
38
5266TP

# TRANSMISSION CONTROLS
# COMMANDES DE LA TRANSMISSION
# GETRIEBESCHALTHEBEL
# CONTROLES DA TRANSMISSÃO
# CONTROLES DE LA TRANSMISIÓN

| No. | Part No. | Qty | Description | Description | Benennung | Descrição | Descripción |
|---|---|---|---|---|---|---|---|
| 1 | **201497** | 6 | Washer | rondelle | Scheibe | arruela | arandela |
| 2 | **565389** | 3 | Knob | bouton | Knopf | manípula | botón |
| 3 | **600007** | 1 | Rod | tige | Stange | varão | varilla |
| 4 | **664174** | 1 | Washer | rondelle | Scheibe | arruela | arandela |
| 5 | **675227** | 1 | Bearing | palier | Lager | mancal | cojinete |
| 6 | **710818** | 1 | Rod end | bout biellette | Stangenende | extremidade haste | estremo de varilla |
| 7 | **710852** | 1 | Rod end | bout biellette | Stangenende | extremidade haste | estremo de varilla |
| 8 | **713008** | 1 | Bolt | boulon | Bolzen | parafuso | bulón |
| 9 | **1305373** | 1 | Shoulder screw | vis dépaulement | Ansatzschraube | parafuso de esbarro | tornillo de tope |
| 10 | **1312081** | 1 | Bearing | palier | Lager | mancal | cojinete |
| 11 | **1522535** | 2 | Seal | joint étanchéité | Dichtung | vedador | sello |
| 12 | **1900497** | 1 | Bracket | support | Winkel | grampo | grampa |
| 13 | **1900501** | 1 | Rod | tige | Stange | varão | varilla |
| 14 | **1900503** | 1 | Rod | tige | Stange | varão | varilla |
| 15 | **1900793** | 1 | Bell Crank | levier coudé | Kniehebel | balancinho | balancín |
| 16 | **1913819** | 1 | Sleeve | manchon | Muffe | luva | manguito |
| 17 | **1914780** | 1 | Pin | goupille | Stift | pino | pasador |
| 18 | **1914783** | 1 | Bellcrank assy | levier coudé ens | Kniehebel voll | balancinho cj | balancín cj |
| 19 | **1914789** | 1 | Bracket | support | Winkel | grampo | grampa |
| 20 | **1914791** | 1 | Lever | levier | Hebel | alavanca | palanca |
| 21 | **1915771** | 2 | Spring | ressort | Feder | mola | resorte |
| 22 | **1915773** | 1 | Lever | levier | Hebel | alavanca | palanca |
| 23 | **1915775** | 1 | Lever | levier | Hebel | alavanca | palanca |
| 24 | **1915777** | 1 | Bellcrank assy | levier coudé ens | Kniehebel voll | balancinho cj | balancín cj |
| 25 | **1915780** | 1 | Bellcrank assy | levier coudé ens | Kniehebel voll | balancinho cj | balancín cj |
| 26 | **1915785** | 4 | Seal | joint étanchéité | Dichtung | vedador | sello |
| 27 | †**1916034** | 2 | Bushing | chemise | Buchse | bucha | buje |
| 28 | ⊠**1916060** | 1 | Bellcrank assy | levier coudé ens | Kniehebel voll | balancinho cj | balancín cj |
| 29 | ⊠**1916061** | 1 | Bellcrank assy | levier coudé ens | Kniehebel voll | balancinho cj | balancín cj |
| 30 | ⊠**1916062** | 1 | Bracket | support | Winkel | grampo | grampa |
| 31 | **1916985** | 1 | Lockplate | plaque darrêt | Schlossblech | chapa retentora | chapa seguridad |
| 32 | †**1916989** | 1 | Plunger | plongeur | Druckstange | embolo | émbolo buzo |
| 33 | **1917680** | 1 | Bracket | support | Winkel | grampo | grampa |
| 34 | **1F0000312** | 9 | Pin | goupille | Stift | pino | pasador |
| 35 | **1F0001412** | 1 | Pin | goupille | Stift | pino | pasador |
| 36 | **2J0006208** | 3 | Clevis | étrier | Schkel | garfo | horquilla |
| 37 | **4E0000008** | 2 | Lockwasher | rondelle frein | Sicherungsscheibe | arruela de pressão | arandela seguridad |
| 38 | **4F0006106** | 2 | Pin | goupille | Stift | pino | pasador |
| 39 | **1317198** | 1 | Rod | tige | Stange | varão | varilla |
| 40 | **8D0000006** | 3 | Nut | écrou | Mutter | porca | tuerca |
| 41 | **17C000828** | 4 | Bolt | boulon | Bolzen | parafuso | bulón |
| 42 | **17C000848** | 1 | Bolt | boulon | Bolzen | parafuso | bulón |
| 43 | **17D000002** | 1 | Nut | écrou | Mutter | porca | tuerca |
| 44 | **17D000006** | 3 | Nut | écrou | Mutter | porca | tuerca |
| 45 | **18C000620** | 2 | Bolt | boulon | Bolzen | parafuso | bulón |
| 46 | **18C000624** | 2 | Bolt | boulon | Bolzen | parafuso | bulón |
| 47 | **18D000006** | 2 | Nut | écrou | Mutter | porca | tuerca |
| 48 | **25E000022** | 2 | Washer | rondelle | Scheibe | arruela | arandela |
| 49 | **66D000006** | 2 | Nut | écrou | Mutter | porca | tuerca |

666CUM 500E-711-CAC➡500G-9999-CAC
666GM 513E-806-CAC➡513G-9999-CAC
666GMGR 515A-101-CAC➡515A-9999-CAC

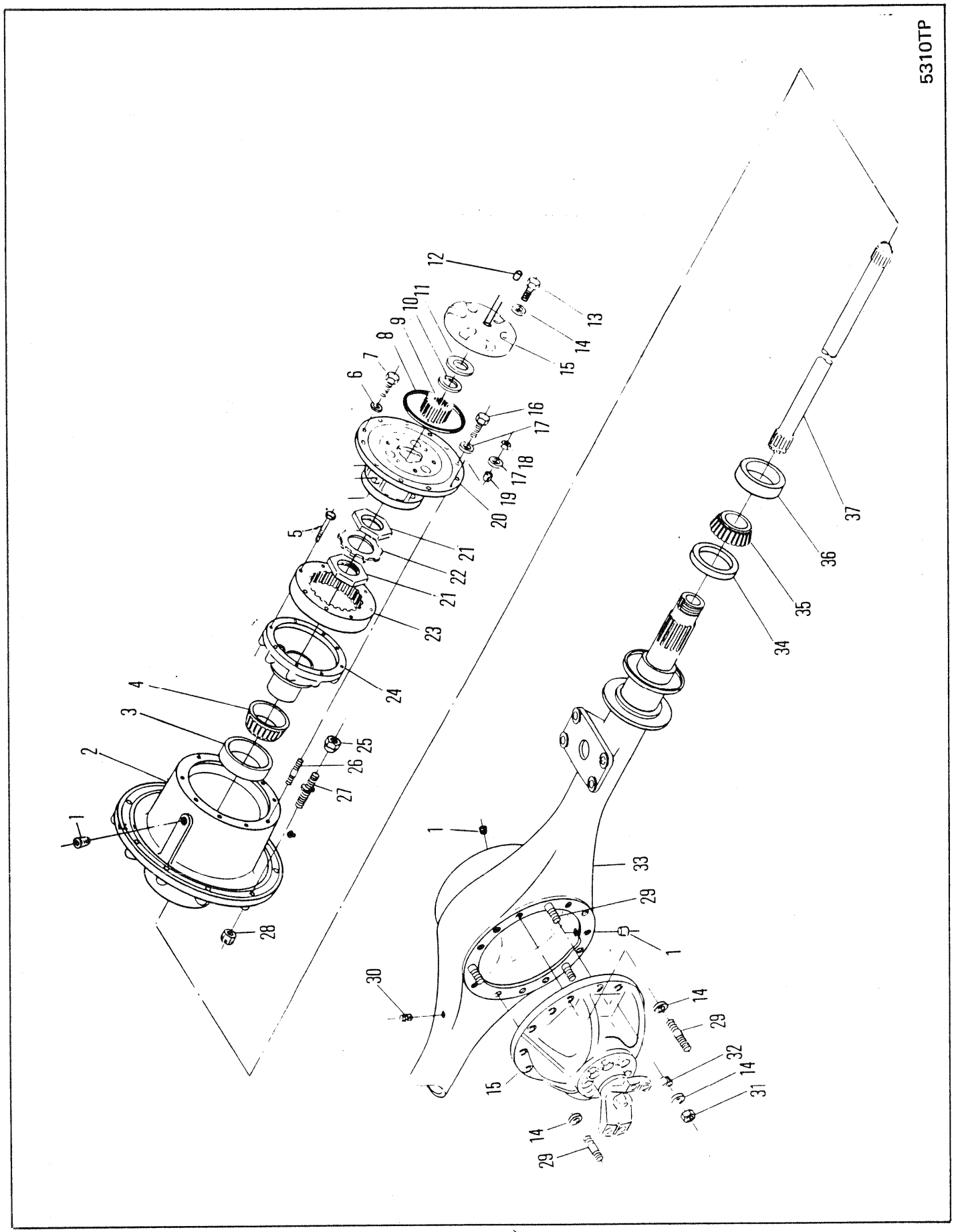
5310TP

# AXLE ASSEMBLY, FRONT-17600
# ESSIEU AV, ENSEMBLE-17600
# ACHSE VOLLSTÄNDIG, VORDERRADANTRIEB-17600
# EIXO DIANTEIRO, CONJUNTO-17600
# EJE DELANTERO, CONJUNTO-17600

| No. | Part No. | Qty | Description | Description | Benennung | Descrição | Descripción |
|---|---|---|---|---|---|---|---|
| A | [2]192544 | 1 | Axle assy | essieu ensemble | Achse vollst | eixo conjunto | eje conjunto |
| B | [2]192545 | 1 | Axle assy | essieu ensemble | Achse vollst | eixo conjunto | eje conjunto |
| C | [3]107016 | 2 | Intrnal gear&hub | engren int&moy | Internes Rad&Nabe | cubo e engr int | engr y cubo int |
| 1 | 11F000012 | 4 | Plug | bouchon | Stopfen | bujão | tapón |
| 2 | [1]122470 | 2 | Hub assy | moyeu ens | Nabe vollst | cubo conj | cubo conj |
| 3 | 672181 | 2 | Cup | cuvette | Schale | capa | cubeta |
| 4 | 672182 | 2 | Cone | cône | Kegel | cone | cono |
| 5 | 106880 | 16 | Bolt | boulon | Bolzen | parafuso | bulón |
| 6 | 3E000008 | 4 | Lockwasher | rondelle frein | Sicherungsscheibe | arruela de pressão | arandela seguridad |
| 7 | 1C000808 | 4 | Bolt | boulon | Bolzen | parafuso | bulón |
| 8 | 114089 | 2 | Ring | anneau | Ring | anel | anillo |
| 9 | 106058 | 2 | Gear | engrenage | Zahnrad | engrenagem | engranaje |
| 10 | 224028 | 2 | Ring | anneau | Ring | anel | anillo |
| 11 | 106455 | 2 | Washer | rondelle | Scheibe | arruela | arandela |
| 12 | 11F000004 | 2 | Plug | bouchon | Stopfen | bujão | tapón |
| 13 | 1C000720 | 12 | Screw | vis | Schraube | parafuso | tornillo |
| 14 | 112278 | 26 | Washer | rondelle | Scheibe | arruela | arandela |
| 15 | ○114119 | 2 | Cover assy | couvercle ens | Deckel vollst | tampa conj | tapa conj |
| 16 | 100970 | 10 | Bolt | boulon | Bolzen | parafuso | bulón |
| 17 | 106762 | 20 | Washer | rondelle | Scheibe | arruela | arandela |
| 18 | 64D000008 | 10 | Nut | écrou | Mutter | porca | tuerca |
| 19 | 112287 | 10 | Dowel | goujon | Stift | espiga | espiga |
| 20 | ○------ | 2 | Planet carr assy | port planétaire ens | Planetentraeger voll | sup planet conj | sop planet conj |
| 21 | 114433 | 4 | Nut | écrou | Mutter | porca | tuerca |
| 22 | 101274 | 2 | Lock | serrure | Schloss | fechadura | cerradura |
| 23 | 106059 | 2 | Gear | engrenage | Zahnrad | engrenagem | engranaje |
| 24 | 113850 | 2 | Hub | moyeu | Nabe | cubo | cubo |
| 25 | [5]1900649 | 20 | Nut | écrou | Mutter | porca | tuerca |
| 26 | 116419 | 10 | Stud | goujon | Stift | prisioneiro | espárrago |
| 27 | 113929 | 20 | Stud | goujon | Stift | prisioneiro | espárrago |
| 28 | 103076 | 20 | Nut | écrou | Mutter | porca | tuerca |
| 29 | 119270 | 14 | Stud | goujon | Stift | prisioneiro | espárrago |
| 30 | 955743 | 1 | Breather | reniflard | Entlüfter | respiradouro | respiradero |
| 31 | 64D000007 | 14 | Nut | écrou | Mutter | porca | tuerca |
| 32 | 103216 | 3 | Dowel | goujon | Stift | espiga | espiga |
| 33 | [4]125682 | 1 | Housing axle | boitier dessieu | Gehäuse Achsen | carcaça eixo | carcasa eje |
| 34 | 122664 | 2 | Seal | joint étanchéité | Dichtung | vedador | sello |
| 35 | 799408 | 2 | Cone | cône | Kegel | cone | cono |
| 36 | 658985 | 2 | Cup | cuvette | Schale | capa | cubeta |
| 37 | 112054 | 2 | Axle shaft | arbre dessieu | Achsenwelle | haste eixo | barra eje |

[1] Inc 3 & 36

[2] Inc C, 1➟37

[3] Inc 23,37 & 5

[4] No longer available
[4] N'est plus disponible
[4] Nucht mehr erhältlich
[4] Não está mais disponível
[4] No se produce más

[5] Ref S.B. Group 771, No. 04, 9/86.

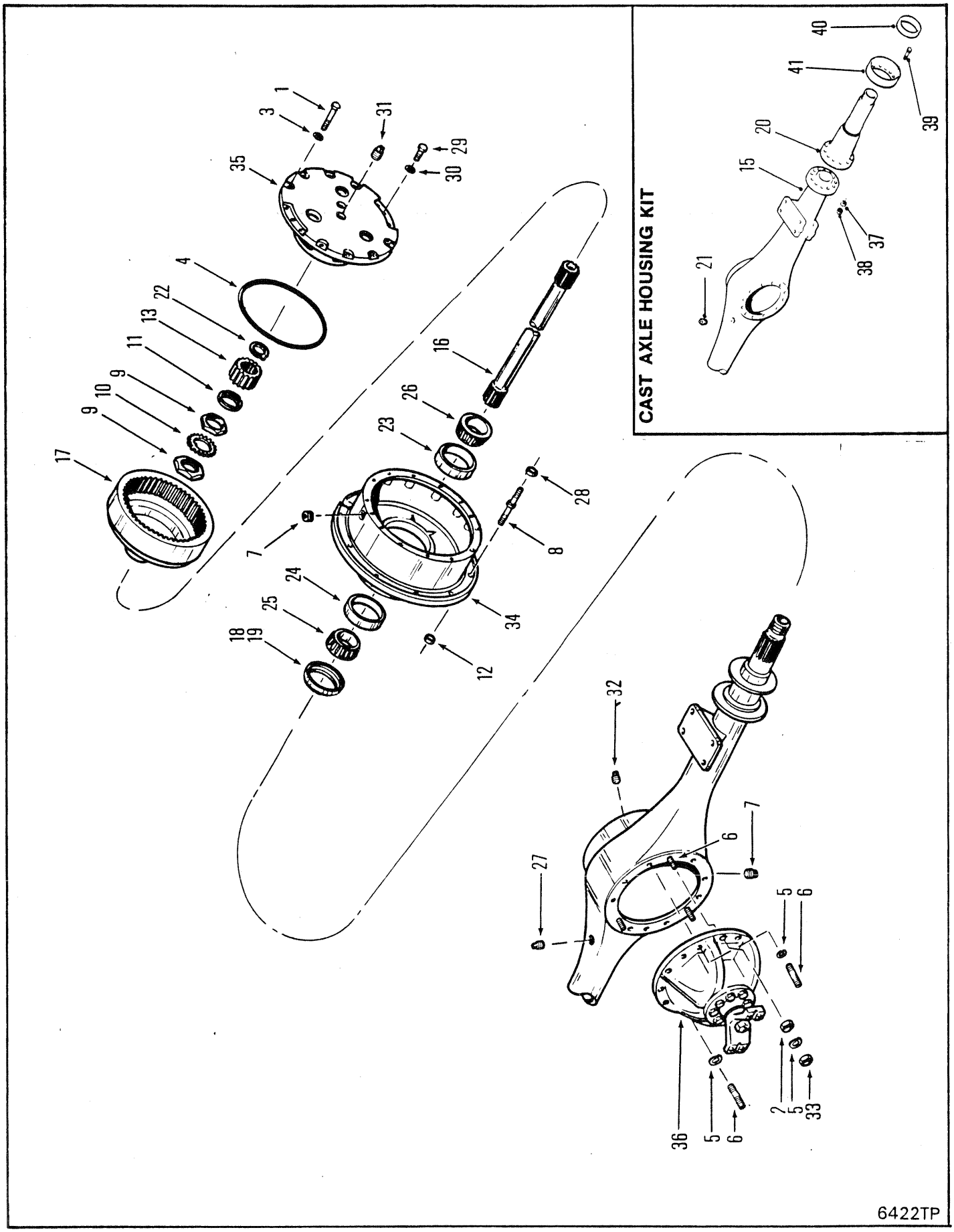
CAST AXLE HOUSING KIT
6422TP

# AXLE ASSEMBLY, FRONT - 17800 - HD ⊠
# ESSIEU AV, ENSEMBLY - 17800 - HD ⊠
# ACHSE VOLLSTÄNDIG, VORDERRADANTRIEB - 17800 - HD ⊠
# EIXO DIANTEIRO, CONJUNTO - 17800 - HD ⊠
# EJE DELANTERO, CONJUNTO - 17800 - HD ⊠

| No. | Part No. | Qty | Description | Description | Benennung | Descrição | Descripción |
|---|---|---|---|---|---|---|---|
| A | [3]191799 | 1 | Axle assy | essieu ensemble | Achse vollst | eixo conjunto | eje conjunto |
| B | [7]191800 | 1 | Axle assy | essieu ensemble | Achse vollst | eixo conjunto | eje conjunto |
| C | [6]841036 | 1 | Housing kit | ens boitier | Gehäuse vollst | conj carcaça | juego carcasa |
| 1 | 100970 | 24 | Bolt | boulon | Bolzen | parafuso | bulón |
| 2 | 103216 | 3 | Dowel | goujon | Stift | espiga | espiga |
| 3 | 106762 | 24 | Washer | rondelle | Scheibe | arruela | arandela |
| 4 | 107348 | 2 | Seal ring | anneau du joint | Dichtungsring | anel de vedação | anillo de sello |
| 5 | 112278 | 42 | Washer | rondelle | Scheibe | arruela | arandela |
| 6 | 119270 | 42 | Stud | goujon | Stift | prisioneiro | espárrago |
| 7 | 119469 | 3 | Plug | bouchon | Stopfen | bujão | tapón |
| 8 | 113929 | 20 | Stud | goujon | Stift | prisioneiro | espárrago |
| 9 | 121013 | 4 | Nut | écrou | Mutter | porca | tuerca |
| 10 | 121014 | 2 | Lock | serrure | Schloss | fechadura | cerradura |
| 11 | 121015 | 2 | Sleeve | manchon | Muffe | luva | manguito |
| 12 | 86D000012 | 20 | Nut | écrou | Mutter | porca | tuerca |
| 13 | 121804 | 2 | Sun gear | engrenage principal | Umlaufring | engrenagem solar | engrenaje planetario |
| 14 | [4]121851 | 2 | Hub assy | moyeu ens | Nabe vollst | cubo conj | cubo conj |
| 15 | 2106470 | 1 | Axle housing | boitier dessieu | Gehäuse Achsen | carcaça eixo | carcasa eje |
| 16 | 123672 | 2 | Shaft | arbre | Welle | ávore | árbol |
| 17 | 123904 | 2 | Gear&hub | engren&moyeu | Zahnrad&Nabe | engren&cubo | engran&cubo |
| 18 | [2]124325 | 2 | Seal | joint étanchéité | Dichtung | vedador | sello |
| 19 | [1]128117 | 2 | Seal | joint étanchéité | Dichtung | vedador | sello |
| 20 | 121802 | 2 | Spindle | fusée | Spindel | haste | eje |
| 21 | 19F000012 | 1 | Bushing | chemise | Buchse | bucha | buje |
| 22 | 224028 | 2 | Snap ring | circlips | Sperring | anel de trava | anillo de retención |
| 23 | 668553 | 2 | Cup | cuvette | Schale | capa | cubeta |
| 24 | 672004 | 2 | Cup | cuvette | Schale | capa | cubeta |
| 25 | 672005 | 2 | Cone | cône | Kegel | cone | cono |
| 26 | 675261 | 2 | Cone | cône | Kegel | cone | cono |
| 27 | 955743 | 1 | Breather | reniflard | Entlüfter | respiradouro | respiradero |
| 28 | 1900649 | 20 | Nut | écrou | Mutter | porca | tuerca |
| 29 | 1C000808 | 4 | Bolt | boulon | Bolzen | parafuso | bulón |

[1] When 121012 is used alone, replace with 128117 oil seal.
[1] Lorsque 121012 est utilisé seul, le remplacer par le joint d'étanchéité d'huile 128117
[1] Wenn Posten 121012 allein verwendet wird, durch Öldichtung 128117 ersetzen.
[1] Se 121012 for utilizado isoladamente, substituir por junta de óleo 128117
[1] Al utilizar 121012 solo, reemplazar con selladura para aceite 128117

[2] When 121012 is used with 121169, replace the pair with 124325.
[2] Lorsque 121012 est utilisé avec 121169, remplacer les deux par 124325.
[2] Wenn Posten 121012 mit Buchse 121169 verwendet wird, das Paar durch Öldichtung 124325 ersetzen.
[2] Se utilizado com 121169, substituir o par por 124325.
[2] Al utilizar 121012 con 121169, reemplazar el par con 124325.

[3] Optional, with no-spin differential.
[3] Facultatif, avec différentiel anti-patinage.
[3] Wahlweise, mit no-spin Differential.
[3] Facultativo, com diferencial anti-patinante.
[3] Opcional, con diferencial anti-patinaje.

[4] Inc 34

[5] See item 14
[5] Voir article 14
[5] Siehe Teil 14
[5] Ver item 14
[5] Ver item 14

[6] Inc 15, 20, 21, 37➡41

[7] Standard, without no-spin differential.
[7] Standard, sans différentiel anti-patinage.
[7] Serienmässig, ohne so spin Differential.
[7] Standard, sem diferencial anti-patinante.
[7] Standard, sin diferencial anti-patinaje.

666CUM 500D-1232-CAC➡500G-9999-CAC 500H-101-CAC➡500H-735-CAC
666GM 513E-101-CAC➡513G-9999-CAC

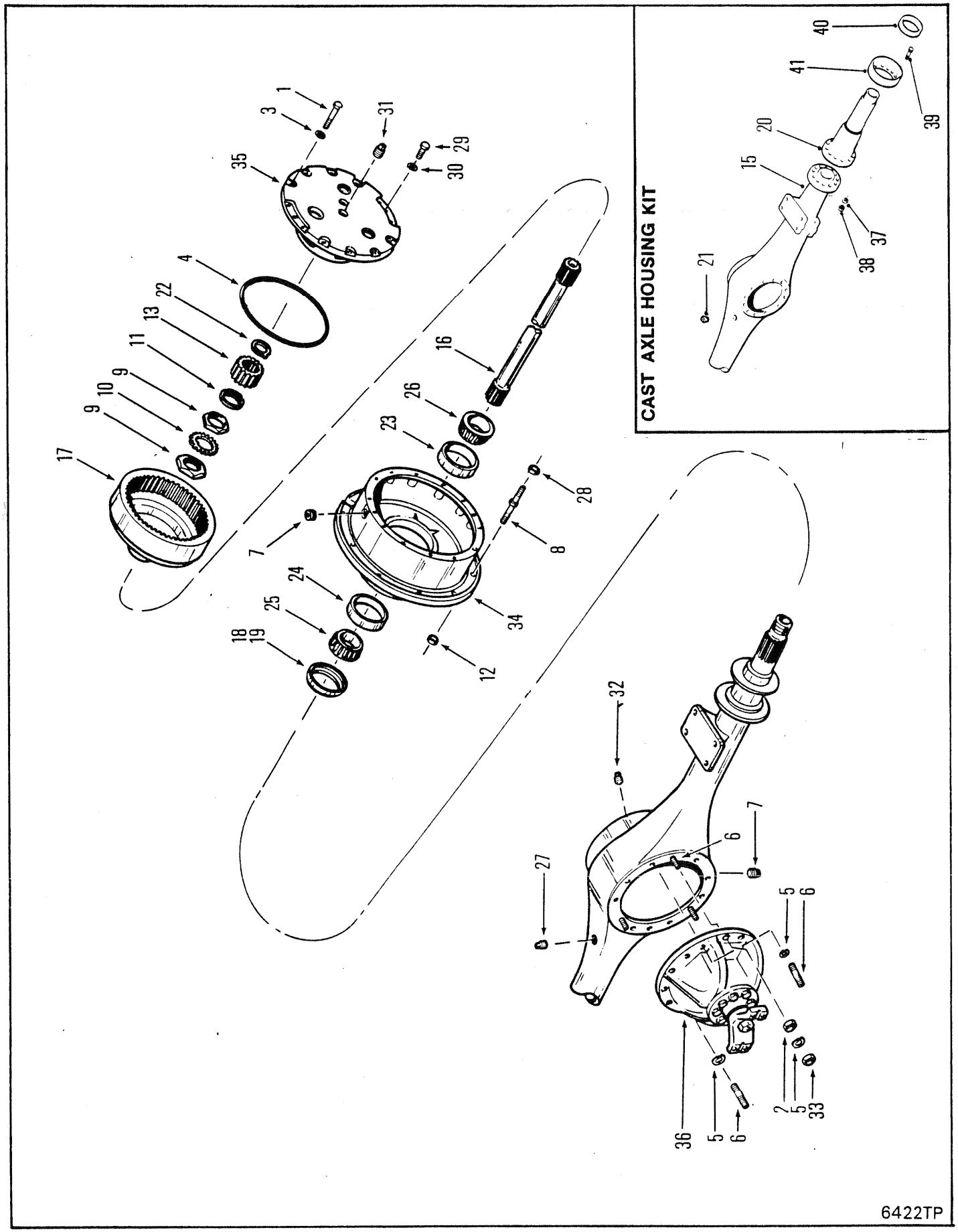
CAST AXLE HOUSING KIT
6422TP

# AXLE ASSEMBLY, FRONT - 17800 - HD ⊠
# ESSIEU AV, ENSEMBLY - 17800 - HD ⊠
# ACHSE VOLLSTÄNDIG, VORDERRADANTRIEB - 17800 - HD ⊠
# EIXO DIANTEIRO, CONJUNTO - 17800 - HD ⊠
# EJE DELANTERO, CONJUNTO - 17800 - HD ⊠

| No. | Part No. | Qty | Description | Description | Benennung | Descrição | Descripción |
|---|---|---|---|---|---|---|---|
| 30 | **3E000008** | 4 | Lockwasher | rondelle frein | Sicherungsscheibe | arruela de pressão | arandela seguridad |
| 31 | **11F000004** | 2 | Plug | bouchon | Stopfen | bujão | tapón |
| 32 | **11F000012** | 1 | Plug | bouchon | Stopfen | bujão | tapón |
| 33 | **64D000007** | 14 | Nut | écrou | Mutter | porca | tuerca |
| 34 | [5]§-------- | - | Hub | moyeu | Nabe | cubo | cubo |
| 35 | ○-------- | 1 | Planet carr assy | port planétaire ens | Planetentraeger voll | sup planet conj | sop planet conj |
| 36 | ○--------- | 1 | Diff carrier assy | ens chassis port dif | Träger Difflagr voll | conj suporte dif | conj sopor |
| 37 | **104412** | 20 | Washer | rondelle | Scheibe | arruela | arandela |
| 38 | **106998** | 20 | Nut | écrou | Mutter | porca | tuerca |
| 39 | **117336** | 20 | Stud | goujon | Stift | prisioneiro | espárrago |
| 40 | **128117** | 2 | Seal | joint étanchéité | Dichtung | vedador | sello |
| 41 | **2107398** | 2 | Seal | joint étanchéité | Dichtung | vedador | sello |

[1] When 121012 is used alone, replace with 128117 oil seal.
[1] Lorsque 121012 est utilisé seul, le remplacer par le joint d'étanchéité d'huile 128117
[1] Wenn Posten 121012 allein verwendet wird, durch Öldichtung 128117 ersetzen.
[1] Se 121012 for utilizado isoladamente, substituir por junta de óleo 128117
[1] Al utilizar 121012 solo, reemplazar con selladura para aceite 128117

[2] When 121012 is used with 121169, replace the pair with 124325.
[2] Lorsque 121012 est utilisé avec 121169, remplacer les deux par 124325.
[2] Wenn Posten 121012 mit Buchse 121169 verwendet wird, das Paar durch Öldichtung 124325 ersetzen.
[2] Se utilizado com 121169, substituir o par por 124325.
[2] Al utilizar 121012 con 121169, reemplazar el par con 124325.

[3] Optional, with no-spin differential.
[3] Facultatif, avec différentiel anti-patinage.
[3] Wahlweise, mit no-spin Differential.
[3] Facultativo, com diferencial anti-patinante.
[3] Opcional, con diferencial anti-patinaje.

[4] Inc 34

[5] See item 14
[5] Voir article 14
[5] Siehe Teil 14
[5] Ver item 14
[5] Ver item 14

[6] Inc 15, 20, 21, 37➞41

[7] Standard, without no-spin differential.
[7] Standard, sans différentiel anti-patinage.
[7] Serienmässig, ohne so spin Differential.
[7] Standard, sem diferencial anti-patinante.
[7] Standard, sin diferencial anti-patinaje.

666CUM 500D-1232-CAC➞500G-9999-CAC 500H-101-CAC➞500H-735-CAC
666GM 513E-101-CAC➞513G-9999-CAC

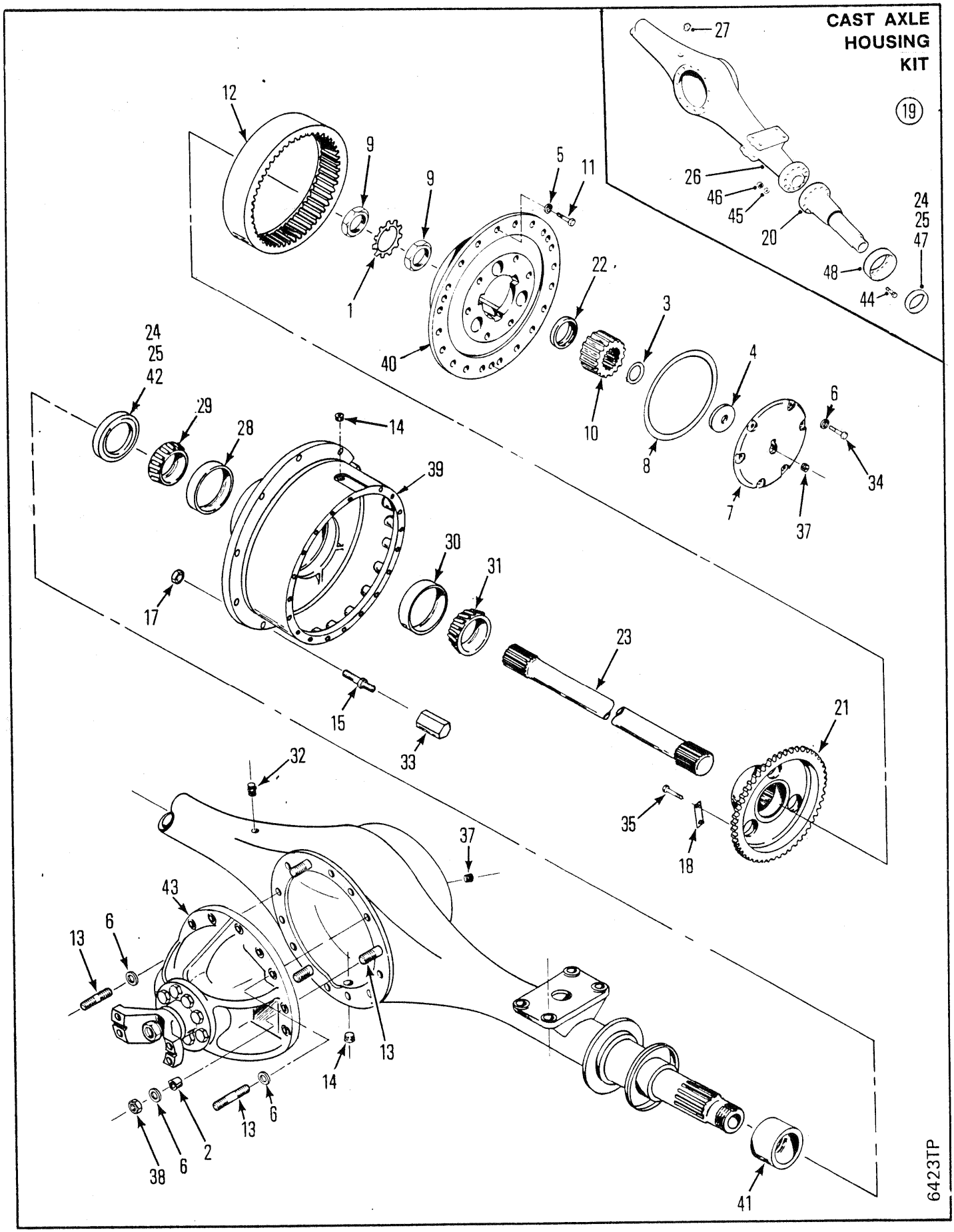
CAST AXLE HOUSING KIT
19
27
26
46
45
20
24
25
47
48
44
12
9
9
5
11
1
40
22
3
10
8
4
6
34
7
37
24
25
42
29
28
14
39
30
31
17
15
33
23
21
35
18
32
37
43
6
13
13
14
1
13
6
2
6
38
41
6423TP

# AXLE ASSEMBLY,FRONT - 17900
# ESSIEU AV ENSEMBLE - 17900
# ACHSE VOLLSTÄNDIG,VORDERRANDTRIEB - 17900
# EIXO DIANTEIRO, CONJUNTO - 17900
# EJE DELANTERO, CONJUNTO - 17900

| No. | Part No. | Qty | Description | Description | Benennung | Descrição | Descripción |
|---|---|---|---|---|---|---|---|
| A | [1]123514 | 2 | Gear&hub | engren&moyeu | Zahnrad&Nabe | engren&cubo | engran&cubo |
| B | [4]191474 | 1 | Axle assy | essieu ensemble | Achse vollst | eixo conjunto | eje conjunto |
| C | [5]191475 | 1 | Axle assy | essieu ensemble | Achse vollst | eixo conjunto | eje conjunto |
| 1 | 101274 | 2 | Lock | serrure | Schloss | fechadura | cerradura |
| 2 | 103216 | 3 | Dowel | goujon | Stift | espiga | espiga |
| 3 | 106247 | 2 | Snap ring | circlips | Sperring | anel de trava | anillo de retención |
| 4 | 106457 | 2 | Thrust washer | rondelle pouss | Ritzeldruck | arruela empuxo | arandela empuje |
| 5 | 106547 | 40 | Washer | rondelle | Scheibe | arruela | arandela |
| 6 | 112278 | 27 | Washer | rondelle | Scheibe | arruela | arandela |
| 7 | 113290 | 2 | Cap | chapeau | Kappe | tampa | tapa |
| 8 | 113292 | 2 | Seal ring | anneau du joint | Dichtungsring | anel de vedação | anillo de sello |
| 9 | 114433 | 4 | Nut | écrou | Mutter | porca | tuerca |
| 10 | 116588 | 2 | Sun gear | engrenage principal | Umlaufring | engrenagem solar | engrenaje planetario |
| 11 | 117225 | 40 | Bolt | boulon | Bolzen | parafuso | bulón |
| 12 | 119211 | 1 | Gear | engrenage | Zahnrad | engrenagem | engranaje |
| 13 | 119270 | 14 | Stud | goujon | Stift | prisioneiro | espárrago |
| 14 | 119469 | 2 | Plug | bouchon | Stopfen | bujão | tapón |
| 15 | 113929 | 20 | Stud | goujon | Stift | prisioneiro | espárrago |
| 16 | †120707 | 1 | Nameplate | plaque du constructr | Namensschild | placa do nome | placa de nombre |
| 17 | 86D000012 | 20 | Nut | écrou | Mutter | porca | tuerca |
| 18 | 122701 | 6 | Plate retainer | plaque de maintien | Halteplatte | chapa rententora | placa del retén |
| 19 | [7]841036 | 1 | Housing kit | ens boitier | Gehäuse vollst | conj carcaça | juego carcasa |
| 20 | 121802 | 2 | Spindle | fusée | Spindel | haste | eje |
| 21 | 123515 | 1 | Hub | moyeu | Nabe | cubo | cubo |
| 22 | 123517 | 2 | Sleeve | manchon | Muffe | luva | manguito |
| 23 | 123789 | 2 | Shaft | arbre | Welle | ávore | árbol |
| 24 | [2]124325 | 2 | Seal | joint étanchéité | Dichtung | vedador | sello |
| 25 | [3]128117 | 2 | Seal | joint étanchéité | Dichtung | vedador | sello |
| 26 | 2106470 | 1 | Axle housing | boitier dessieu | Gehäuse Achsen | carcaça eixo | carcasa eje |
| 27 | 19F000012 | 1 | Bushing | chemise | Buchse | bucha | buje |
| 28 | 672004 | 2 | Cup | cuvette | Schale | capa | cubeta |
| 29 | 672005 | 2 | Cone | cône | Kegel | cone | cono |
| 30 | 742262 | 2 | Cup | cuvette | Schale | capa | cubeta |

[1] Inc 12,18,21 & 35

[2] Replaces 121012 when used with 121169
[2] Remplace 121012 lorsqu'il est utilisé avec 121169
[2] Ersetzt 121012,wenn mit 121169 verwendet
[2] Substitui 121012 quando é usado com 121169
[2] Reemplaza 121012, cuando es usado con 121169

[3] Replaces 121012 alone
[3] Remplace 121012 utilisé seul
[3] Ersetzt nur 121012
[3] Substitui somente 121012
[3] Reemplaza somamente 121012

[4] Standard, without no-spin differential, inc. B,C,1→48
[4] Standard, sans différentiel anti-patinage, comprend B,C,1→48
[4] Serienmässig, ohne so spin Differential, einschl. B,C,1→48
[4] Standard, sem diferencial anti-patinante, incl. B,C,1→48
[4] Standard, sin diferencial anti-patinaje,inc. B,C,1→48

[5] Optional, with no-spin differential, inc. B,C,1→48
[5] Facultatif, avec différentiel anti-patinage, comprend B,C,1→48
[5] Wahlweise, mit no-spin Differential, einschl B,C,1→48
[5] Facultativo, com diferencial anti-patinante, incl. B,C,1→48
[5] Opcional, con diferencial anti-patinaje, inc. B,C,1→48

[6] Inc 15, 17, 28 & 30

[7] Inc. 20,26,27 & 44→48

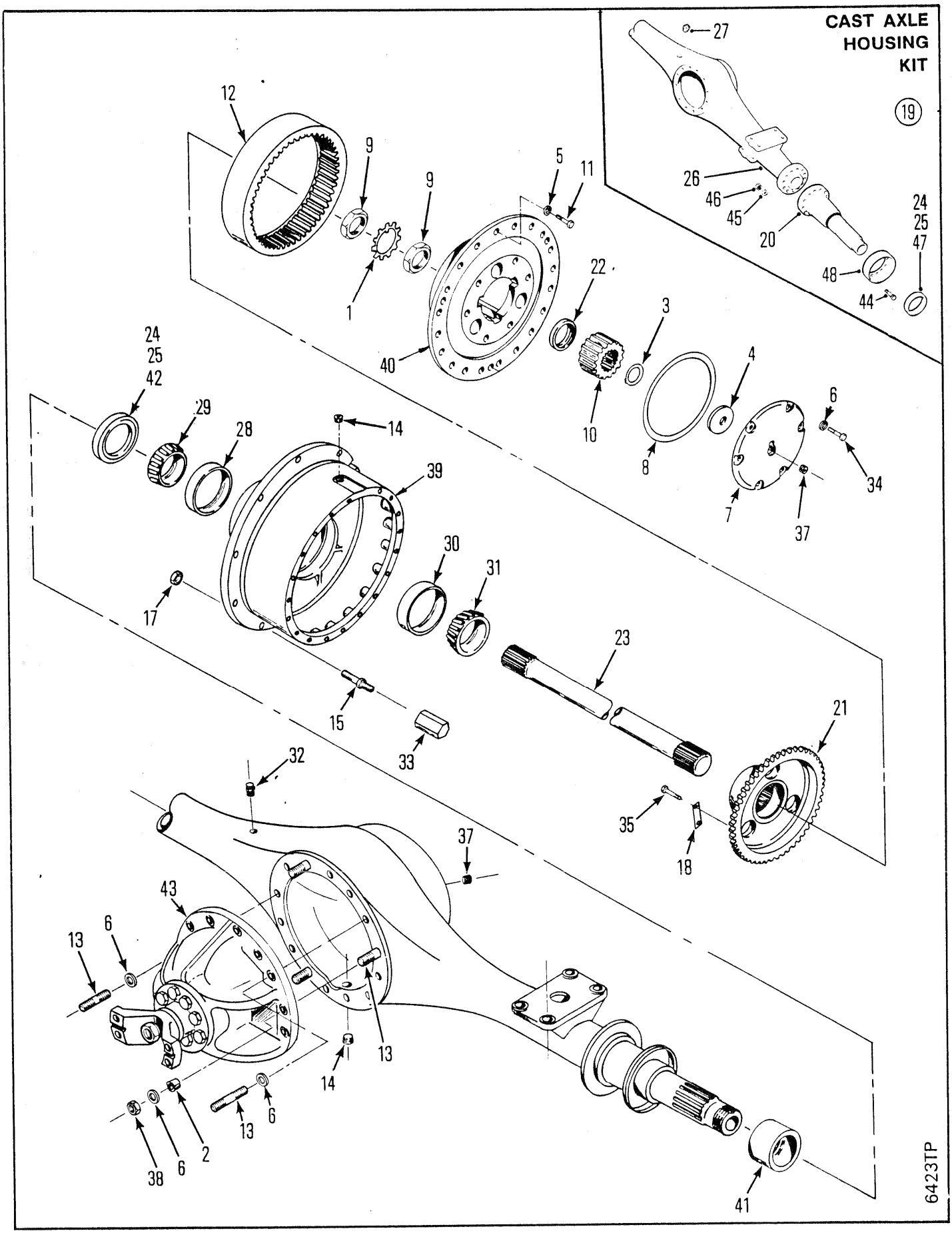
CAST AXLE HOUSING KIT
19
27
26
46
45
20
24
25
47
48
44
12
9
9
5
11
1
40
22
3
10
8
4
6
34
7
37
24
25
42
29
28
14
39
30
31
17
15
33
23
21
18
35
32
37
43
6
13
13
14
13
6
2
6
38
41
6423TP

# AXLE ASSEMBLY,FRONT - 17900
# ESSIEU AV ENSEMBLE - 17900
# ACHSE VOLLSTÄNDIG,VORDERRANDTRIEB - 17900
# EIXO DIANTEIRO, CONJUNTO - 17900
# EJE DELANTERO, CONJUNTO - 17900

| No. | Part No. | Qty | Description | Description | Benennung | Descrição | Descripción |
|---|---|---|---|---|---|---|---|
| 31 | **742263** | 2 | Cone | cône | Kegel | cone | cono |
| 32 | **955743** | 1 | Breather | reniflard | Entlüfter | respiradouro | respiradero |
| 33 | **1900649** | 20 | Nut | écrou | Mutter | porca | tuerca |
| 34 | **1C000720** | 12 | Bolt | boulon | Bolzen | parafuso | bulón |
| 35 | **2C000820** | 24 | Bolt | boulon | Bolzen | parafuso | bulón |
| 36 | **6C0000605** | 2 | Screw | vis | Schraube | parafuso | tornillo |
| 37 | **11F000012** | 3 | Plug | bouchon | Stopfen | bujão | tapón |
| 38 | **64D000007** | 14 | Nut | écrou | Mutter | porca | tuerca |
| 39 | [6]**127109** | 1 | Hub assy | moyeu ens | Nabe vollst | cubo conj | cubo conj |
| 40 | ○--------- | 1 | Planet carr assy | port planétaire ens | Planetentraeger voll | sup planet conj | sop planet conj |
| 41 | [2]--------- | 1 | Sleeve | manchon | Muffe | luva | manguito |
| 42 | [2,3]--------- | 1 | Seal | joint étanchéité | Dichtung | vedador | sello |
| 43 | ○--------- | 1 | Diff carrier assy | ens chassis port dif | Träger Difflagr voll | conj suporte dif | conj sopor |
| 44 | **117336** | 20 | Stud | goujon | Stift | prisioneiro | espárrago |
| 45 | **104412** | 20 | Washer | rondelle | Scheibe | arruela | arandela |
| 46 | **106998** | 20 | Nut | écrou | Mutter | porca | tuerca |
| 47 | **128117** | 2 | Seal | joint étanchéité | Dichtung | vedador | sello |
| 48 | **2107398** | 2 | Seal | joint étanchéité | Dichtung | vedador | sello |

[1] Inc 12,18,21 & 35

[2] Replaces 121012 when used with 121169
[2] Remplace 121012 lorsqu'il est utilisé avec 121169
[2] Ersetzt 121012,wenn mit 121169 verwendet
[2] Substitui 121012 quando é usado com 121169
[2] Reemplaza 121012, cuando es usado con 121169

[3] Replaces 121012 alone
[3] Remplace 121012 utilisé seul
[3] Ersetzt nur 121012
[3] Substitui somente 121012
[3] Reemplaza somamente 121012

[4] Standard, without no-spin differential, inc. B,C,1➡48
[4] Standard, sans différentiel anti-patinage, comprend B,C,1➡48
[4] Serienmässig, ohne so spin Differential, einschl. B,C,1➡48
[4] Standard, sem diferencial anti-patinante, incl. B,C,1➡48
[4] Standard, sin diferencial anti-patinaje,inc. B,C,1➡48

[5] Optional, with no-spin differential, inc. B,C,1➡48
[5] Facultatif, avec différentiel anti-patinage, comprend B,C,1➡48
[5] Wahlweise, mit no-spin Differential, einschl B,C,1➡48
[5] Facultativo, com diferencial anti-patinante, incl. B,C,1➡48
[5] Opcional, con diferencial anti-patinaje, inc. B,C,1➡48

[6] Inc 15, 17, 28 & 30
[7] Inc. 20,26,27 & 44➡48

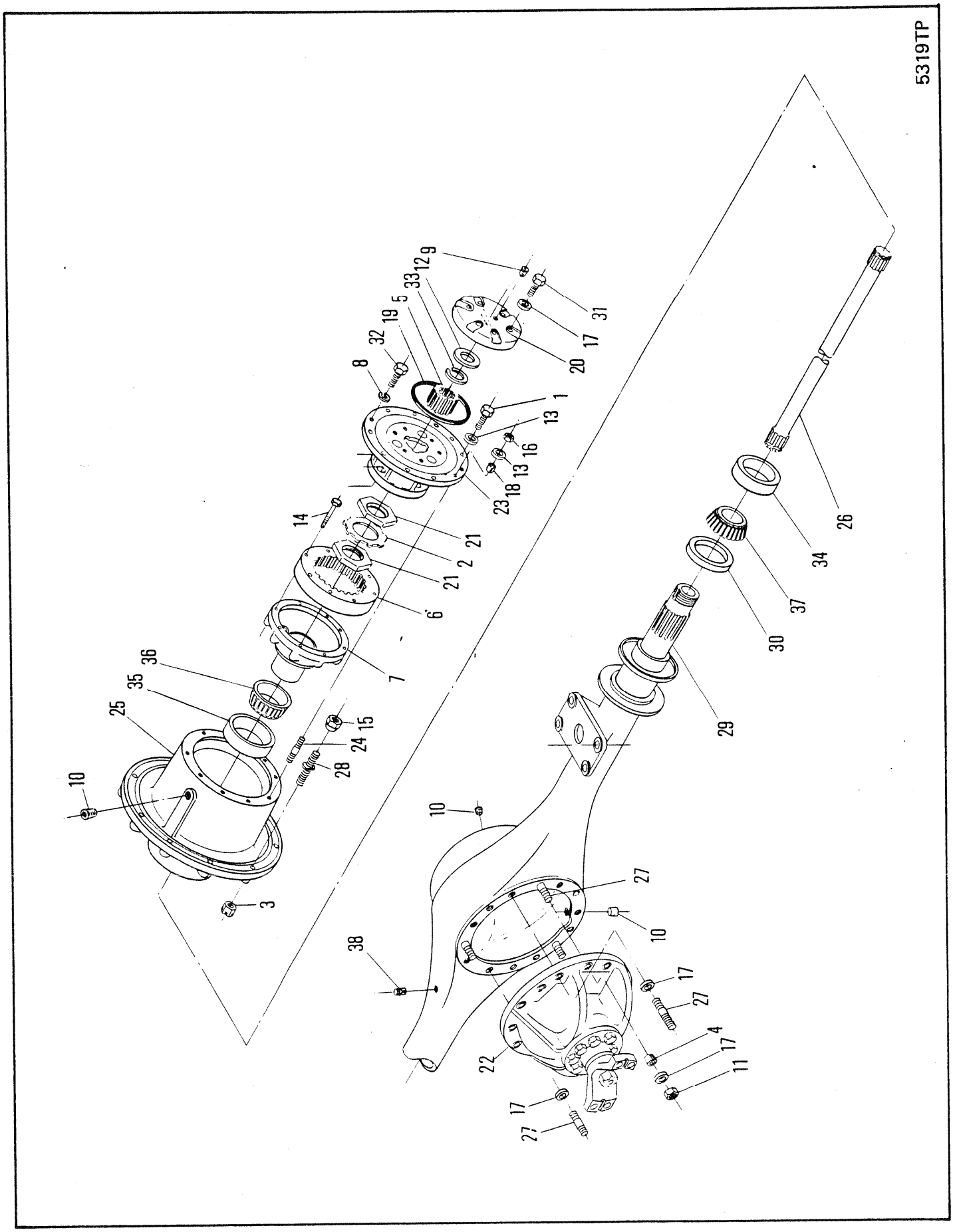
5319TP
1
2
3
4
5
6
7
8
9
10
11
12
13
14
15
16
17
18
19
20
21
22
23
24
25
26
27
28
29
30
31
32
33
34
35
36
37
38

# AXLE ASSEMBLY, FRONT-17600 WIDE TRACK ⊠
# ESSIEU AV, ENSEMBLY-17600 VOIE LARGE ⊠
# ACHSE VOLLSTÄNDIG, VORDERRADANTRIEB-17600 BREITSPUR ⊠
# EIXO DIANTEIRO, CONJUNTO-17600 BITOLA LARGA ⊠
# EJE DELANTERO, CONJUNTO - 17600 RODADA ANCHA ⊠

| No. | Part No. | Qty | Description | Description | Benennung | Descrição | Descripción |
|---|---|---|---|---|---|---|---|
| A | ⊠190856 | 1 | Axle assy | essieu ensemble | Achse vollst | eixo conjunto | eje conjunto |
| B | 191242 | 1 | Axle assy | essieu ensemble | Achse vollst | eixo conjunto | eje conjunto |
| C | [2]107016 | 2 | Intrnal gear&hub | engren int&moy | Internes Rad&Nabe | cubo e engr int | engr y cubo int |
| 1 | 100970 | 10 | Bolt | boulon | Bolzen | parafuso | bulón |
| 2 | 101274 | 2 | Lock | serrure | Schloss | fechadura | cerradura |
| 3 | 103076 | 20 | Nut | écrou | Mutter | porca | tuerca |
| 4 | 103216 | 3 | Dowel | goujon | Stift | espiga | espiga |
| 5 | 106058 | 2 | Sun gear | engrenage principal | Umlaufring | engrenagem solar | engrenaje planetario |
| 6 | 106059 | 2 | Gear | engrenage | Zahnrad | engrenagem | engranaje |
| 7 | 113850 | 2 | Hub | moyeu | Nabe | cubo | cubo |
| 8 | 3E000008 | 4 | Lockwasher | rondelle frein | Sicherungsscheibe | arruela de pressão | arandela seguridad |
| 9 | 11F000004 | 2 | Plug | bouchon | Stopfen | bujão | tapón |
| 10 | 11F000012 | 4 | Plug | bouchon | Stopfen | bujão | tapón |
| 11 | 64D000007 | 14 | Nut | écrou | Mutter | porca | tuerca |
| 12 | 106455 | 2 | Washer | rondelle | Scheibe | arruela | arandela |
| 13 | 106762 | 20 | Washer | rondelle | Scheibe | arruela | arandela |
| 14 | 106880 | 16 | Bolt | boulon | Bolzen | parafuso | bulón |
| 15 | 1900649 | 20 | Nut | écrou | Mutter | porca | tuerca |
| 16 | 64D000008 | 10 | Nut | écrou | Mutter | porca | tuerca |
| 17 | 112278 | 26 | Washer | rondelle | Scheibe | arruela | arandela |
| 18 | 112287 | 10 | Dowel | goujon | Stift | espiga | espiga |
| 19 | 114089 | 2 | Seal ring | anneau du joint | Dichtungsring | anel de vedação | anillo de sello |
| 20 | 114119 | 2 | Cap | chapeau | Kappe | tampa | tapa |
| 21 | 114433 | 4 | Nut | écrou | Mutter | porca | tuerca |
| 22 | ○--------- | 1 | Diff carrier assy F | chassis port dif AV | Träger Difflagr voll V | conj suporte dif DI | conj soporte dif DE |
| 23 | ○--------- | 2 | Planet carr assy | port planétaire ens | Planetentraeger voll | sup planet conj | sop planet conj |
| 24 | 116419 | 10 | Stud | goujon | Stift | prisioneiro | espárrago |
| 25 | [1]116594 | 2 | Hub assy | moyeu ens | Nabe vollst | cubo conj | cubo conj |
| 26 | 117655 | 2 | Shaft | arbre | Welle | ávore | árbol |
| 27 | 119270 | 14 | Stud | goujon | Stift | prisioneiro | espárrago |
| 28 | 113929 | 20 | Stud | goujon | Stift | prisioneiro | espárrago |
| 29 | 121831 | 1 | Housing | botier | Gehuse | carcaça | carcasa |
| 30 | 122664 | 2 | Seal | joint étanchéité | Dichtung | vedador | sello |
| 31 | 1C000720 | 12 | Screw | vis | Schraube | parafuso | tornillo |
| 32 | 1C000808 | 4 | Bolt | boulon | Bolzen | parafuso | bulón |
| 33 | 224028 | 2 | Ring | anneau | Ring | anel | anillo |
| 34 | 658985 | 2 | Cup | cuvette | Schale | capa | cubeta |
| 35 | 672181 | 2 | Cup | cuvette | Schale | capa | cubeta |
| 36 | 672182 | 2 | Cone | cône | Kegel | cone | cono |
| 37 | 799408 | 2 | Cone | cône | Kegel | cone | cono |
| 38 | 955743 | 1 | Breather assy | souffleur | Entlüftereinheit | conj de respirador | conj respirador |

[1] Inc 28, 34 & 35

[2] Inc 6, 7 & 14

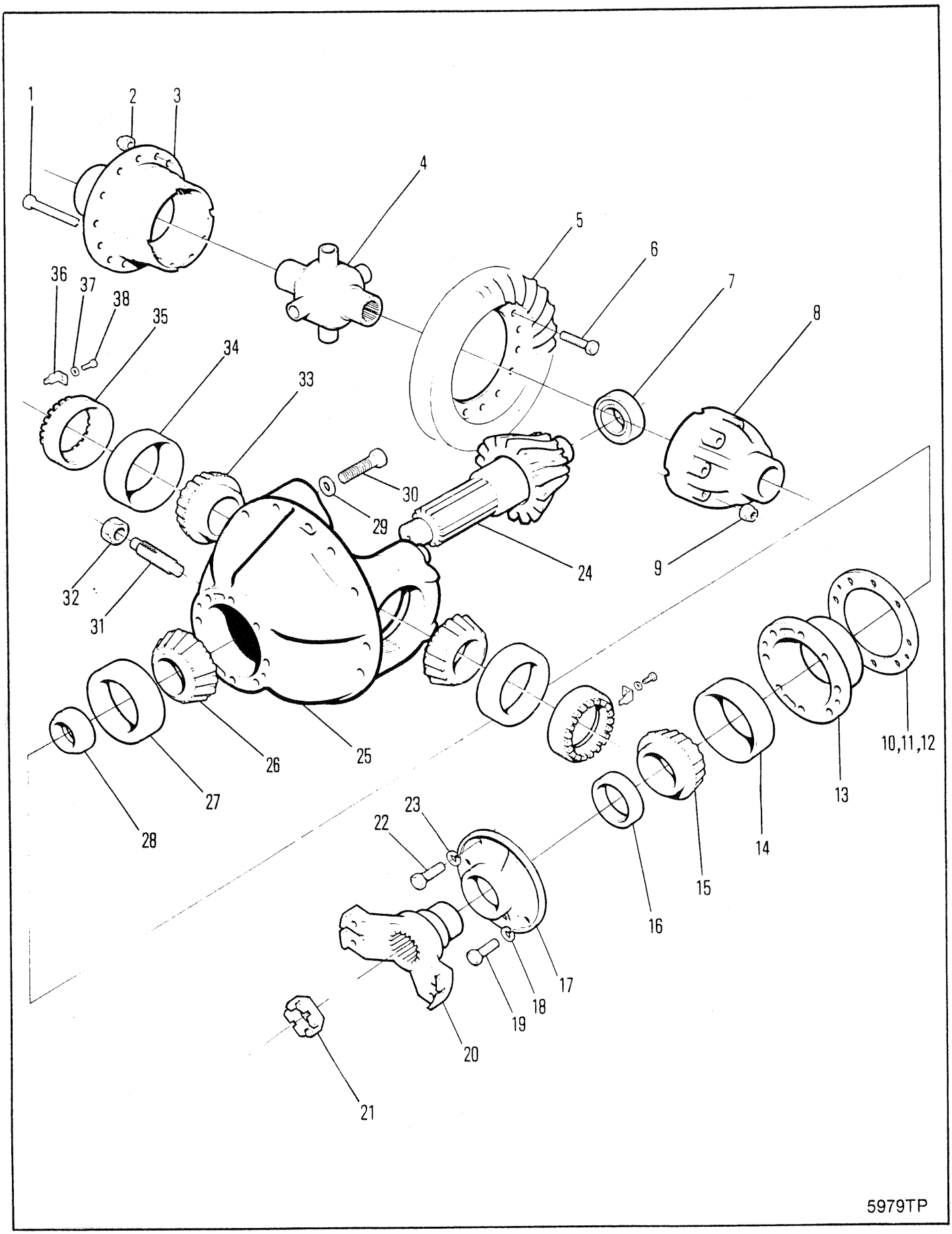
1
2
3
4
5
6
7
8
9
10,11,12
13
14
15
16
17
18
19
20
21
22
23
24
25
26
27
28
29
30
31
32
33
34
35
36
37
38
5979TP

# DIFFERENTIAL & CARRIER ASSEMBLY, FRONT-17600
# ENSEMBLE DE DIFFÉRENTIEL & PORTE-PLAN, AVANT-17600
# DIFFERENTIAL & TRÄGER VOLLSTÄNDIG, VORNE-17600
# CONJUNTO DO DIFERENCIAL & SUPORTE, DIANTEIRO-17600
# CONJUNTO DE DIFERENCIAL & SOPORTE, DELANTERO-17600

| No. | Part No. | Qty | Description | Description | Benennung | Descrição | Descripción |
|---|---|---|---|---|---|---|---|
| A | [1]127991 | 1 | Diff&carr assy | ens dif&porte-plan | Diff&Trger voll | conj difer&sup | conj difer&sop |
| B | [2]124436 | 1 | Diff case assy | boitier differential ens | Differentialgehäuse voll | dif carcaça cj | dif carcasa cj |
| C | [3]124435 | 1 | Diff body | corps de diff | Differentialkrper | corpo do dif | cuerpo diferenc |
| D | [4]112279 | 1 | Carr & cap | bouchon&porteur | Träger&Verschluss | cobert&veiculo | capota&transportador |
| E | [6]815204 | 1 | Rng gear&pin set | ens cour dentée goup | Tellerrad&Ritzlstz | jogo coroa&pinhão | jg corona&pasador |
| F | [7]124886 | 1 | Diff assy | différential ens | Differential voll | diferencial cj | diferencial cj |
| 1 | 100174 | 8 | Bolt | boulon | Bolzen | parafuso | bulón |
| 2 | 104182 | 8 | Nut | écrou | Mutter | porca | tuerca |
| 3 | ------ | 1 | Flange half | demi-flasque | Flanschhlfte | meia flange | media brida |
| 4 | 125600 | 1 | No-spin unit | ens anti-patinage | No-spin Anlage | conj anti-patinante | conj anti-patinaje |
| 5 | ------ | 1 | Ring gear | couronne dentée | Zahnkranz | corõa | corona |
| 6 | 100176 | 12 | Bolt | boulon | Bolzen | parafuso | bulón |
| 7 | 675536 | 1 | Bearing | palier | Lager | mancal | cojinete |
| 8 | ------ | 1 | Plain half | môtié lisse | Glatte Hlfte | metada simples | mitad sencilla |
| 9 | 106762 | 12 | Washer | rondelle | Scheibe | arruela | arandela |
| 10 | [5]112354 | - | Shim | cale | Beilage | calço | planchita |
| 11 | ‡125576 | 19 | Shim .007 | cale-0,18MM | Beilage-0,18MM | calço-0,18MM | planchita-0,18MM |
| 12 | ‡125577 | 19 | Shim .010 | cale-0,25MM | Beilage-0,25MM | calço-0,25MM | planchita-0,25MM |
| 13 | 124041 | 1 | Pinion brg cage | cage roul de pign | Ritzellagerkäfig | grade rol pinhão | jaula coj piñon |
| 14 | 675257 | 1 | Bearing cup | coupelle de roul | Lagerschale | copo do rolamento | taza del coj |
| 15 | 710288 | 1 | Bearing cone | cône de roulement | Lagerkegel | cone do rolamento | cono del conj |
| 16 | 127989 | 1 | Oil seal | jnt étanchéité huile | Öldichtung | vedação de óleo | sello de aceite |
| 17 | 112352 | 1 | Retainer | arrêtoir | Halterung | retentor | retén |
| 18 | 4E000005 | 5 | Lockwasher | rondelle frein | Sicherungsscheibe | arruela de pressão | arandela seguridad |
| 19 | 17C000932 | 5 | Bolt | boulon | Bolzen | parafuso | bulón |
| 20 | 106081 | 1 | Flange | flange | Flansch | bride | brida |
| 21 | 2107447 | 1 | Nut | écrou | Mutter | porca | tuerca |
| 22 | 17C000828 | 1 | Bolt | boulon | Bolzen | parafuso | bulón |
| 23 | 4E000008 | 1 | Lockwasher | rondelle frein | Sicherungsscheibe | arruela de pressão | arandela seguridad |
| 24 | ------ | 1 | Pinion | pignon | Ritzel | pinhão | pion |
| 25 | ------ | 1 | Housing | botier | Gehuse | carcaça | carcasa |
| 26 | 667277 | 1 | Bearing cone | cône de roulement | Lagerkegel | cone do rolamento | cono del conj |
| 27 | 667278 | 1 | Bearing cup | coupelle de roul | Lagerschale | copo do rolamento | taza del coj |
| 28 | 815040 | 1 | Spacer kit | entretoises jeu | Distanzteil Satz | espaçador jôgo | espaciador jgo |
| 29 | 4E000006 | 4 | Lockwasher | rondelle frein | Sicherungsscheibe | arruela de pressão | arandela seguridad |
| 30 | 123830 | 4 | Capscrew | vis àtête | Kopfschraube | parafuso de cabeça | tornilla de presió |
| 31 | 123800 | 1 | Screw | vis | Schraube | parafuso | tornillo |
| 32 | 8D000014 | 1 | Nut | écrou | Mutter | porca | tuerca |
| 33 | 675248 | 2 | Bearing cone | cône de roulement | Lagerkegel | cone do rolamento | cono del conj |
| 34 | 675249 | 2 | Bearing cup | coupelle de roul | Lagerschale | copo do rolamento | taza del coj |
| 35 | 122765 | 2 | Adjusting nut | vis dajustage | Einstellmutter | porca de ajuste | tuerca de ajuste |
| 36 | 100941 | 2 | Nut lock | frein décrou | Scraubensicherung | contraporca | contratuerca |
| 37 | 4E000006 | 2 | Lockwasher | rondelle frein | Sicherungsscheibe | arruela de pressão | arandela seguridad |
| 38 | 1C000614 | 2 | Bolt | boulon | Bolzen | parafuso | bulón |

[1] No longer available, Inc B,C,D,E,F 1➞38
[1] N'est plus disponible,comprend B,C,D,E,F 1➞38
[1] Nucht mehr erhältlich, einschl B,C,D,E,F, 1➞38
[1] Não está mais disponível, incl. B,C,D,E,F, 1➞38
[1] No se produce más, inc. B,C,D,E, 1➞38

[2] Inc 1, 3, 8 & 9

[3] Inc B,1, 3, 4, 8 & 9

[4] Inc 29 & 30

[5] Quantity two (2) needed when ordering one (1) 112354 Shim
[5] Quantité (2) lors de la commande de (1) cale 112354
[5] Menge (2) bei Bestellung von (1) Beilag 112354
[5] Quantidade (2) pedir quando necessitar (1) Calço no. 112354
[5] Cantidad Se necesitan (2) cuando se ordena (1) Planchita 112354

[6] Inc 5 & 24

[7] Inc B, E, 1➞4, 6, 8 & 9

| | |
|---|---|
| 666CUM | 500D-1232-CAC➞500G-9999-CAC |
| 666GM | 513E-101-CAC➞513G-9999-CAC |
| 666GMGR | 515A-101-CAC➞515A-9999-CAC |

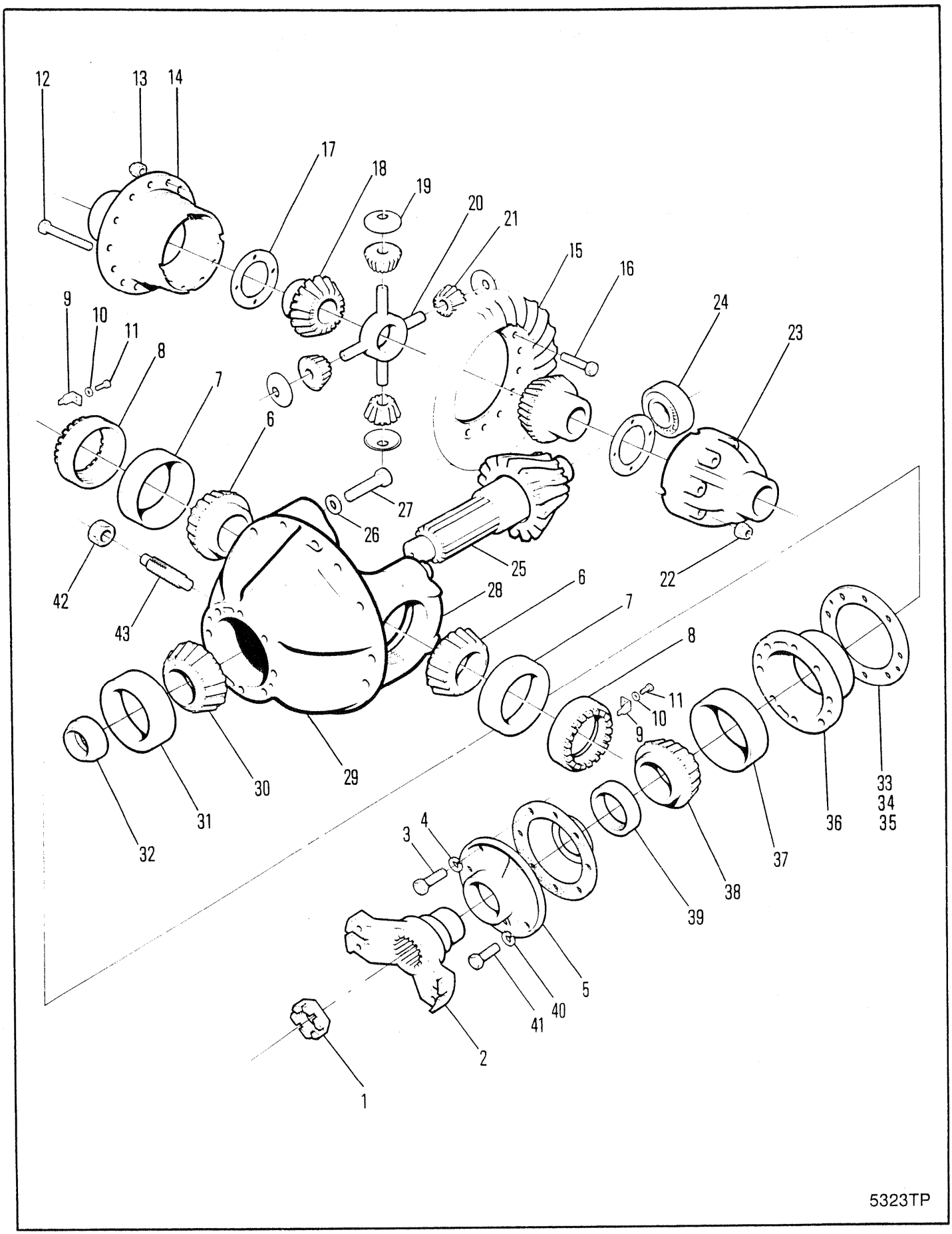
12
13
14
17
18
19
20
21
15
16
24
23
9
10
11
8
7
6
27
26
25
22
42
43
28
6
7
8
11
10
9
33
34
35
36
37
38
39
32
31
30
29
3
4
5
40
41
2
1
5323TP

# DIFFERENTIAL & CARRIER ASSEMBLY, FRONT-17600
# ENSEMBLE DE DIFFÉRENTIEL & PORTE-PLAN, AVANT-17600
# DIFFERENTIAL & TRÄGER VOLLSTÄNDIG, VORNE-17600
# CONJUNTO DO DIFERENCIAL & SUPORTE, DIANTEIRO-17600
# CONJUNTO DE DIFERENCIAL & SOPORTE, DELANTERO-17600

| No. | Part No. | Qty | Description | Description | Benennung | Descrição | Descripción |
|---|---|---|---|---|---|---|---|
| A | [1]127990 | 1 | Diff&carr assy | ens dif&porte-plan | Diff&Trger voll | conj difer&sup | conj difer&sop |
| B | [2]112279 | 1 | Carr & cap | bouchon&porteur | Träger&Verschluss | cobert&veiculo | capota&transportador |
| C | [3]126894 | 1 | Diff case assy | boitier differential ens | Differentialgehäuse voll | dif carcaça cj | dif carcasa cj |
| D | [4]815204 | 1 | Rng gear&pin set | ens cour dentée goup | Tellerrad&Ritzlstz | jogo coroa&pinhão | jg corona&pasador |
| E | [5]124995 | 1 | Diff assy | différential ens | Differential voll | diferencial cj | diferencial cj |
| F | [6]124444 | 1 | Diff body | corps de diff | Differentialkrper | corpo do dif | cuerpo diferenc |
| G | [8]816099 | 1 | Gear kit | engrenage jeu | Zahnradsatz | engrenagem jôgo | engranaje juego |
| 1 | 2107447 | 1 | Nut | écrou | Mutter | porca | tuerca |
| 2 | 106081 | 1 | Flange | flange | Flansch | bride | brida |
| 3 | 17C000828 | 1 | Bolt | boulon | Bolzen | parafuso | bulón |
| 4 | 4E000008 | 1 | Lockwasher | rondelle frein | Sicherungsscheibe | arruela de pressão | arandela seguridad |
| 5 | 112352 | 1 | Retainer | arrêtoir | Halterung | retentor | retén |
| 6 | 675248 | 2 | Bearing cone | cône de roulement | Lagerkegel | cone do rolamento | cono del conj |
| 7 | 675249 | 2 | Bearing cup | coupelle de roul | Lagerschale | copo do rolamento | taza del coj |
| 8 | 122765 | 2 | Adjusting nut | vis dajustage | Einstellmutter | porca de ajuste | tuerca de ajuste |
| 9 | 100941 | 2 | Nut lock | frein décrou | Scraubensicherung | contraporca | contratuerca |
| 10 | 4E000006 | 2 | Lockwasher | rondelle frein | Sicherungsscheibe | arruela de pressão | arandela seguridad |
| 11 | 1C000614 | 2 | Bolt | boulon | Bolzen | parafuso | bulón |
| 12 | 100174 | 8 | Bolt | boulon | Bolzen | parafuso | bulón |
| 13 | 104182 | 8 | Nut | écrou | Mutter | porca | tuerca |
| 14 | ------ | 1 | Flange half | demi-flasque | Flanschhlfte | meia flange | media brida |
| 15 | ------ | 1 | Ring gear | couronne dentée | Zahnkranz | corõa | corona |
| 16 | 100176 | 12 | Bolt | boulon | Bolzen | parafuso | bulón |
| 17 | 100173 | 2 | Washer | rondelle | Scheibe | arruela | arandela |
| 18 | [9]§-------- | 2 | Gear | engrenage | Zahnrad | engrenagem | engranaje |
| 19 | 100172 | 4 | Washer | rondelle | Scheibe | arruela | arandela |
| 20 | 100171 | 1 | Spider | croisillon | Kreuzgelenk | cruzeta | cruceta |
| 21 | [9]§--------- | 4 | Gear | engrenage | Zahnrad | engrenagem | engranaje |
| 22 | 106762 | 8 | Washer | rondelle | Scheibe | arruela | arandela |
| 23 | ------ | 1 | Plain half | môtié lisse | Glatte Hlfte | metada simples | mitad sencilla |
| 24 | 675536 | 1 | Bearing | palier | Lager | mancal | cojinete |
| 25 | ------ | 1 | Pinion | pignon | Ritzel | pinhão | pion |
| 26 | 26E000012 | 4 | Washer | rondelle | Scheibe | arruela | arandela |
| 27 | 123830 | 4 | Capscrew | vis àtête | Kopfschraube | parafuso de cabeça | tornilla de presió |
| 28 | §------ | 1 | Diff case | boitier differentiel | Differentialgehäuse | diferencial carcaça | diferencial carcasa |
| 29 | [7]815784 | 1 | Carrier assy | porteur ens | Trger vollst | conj suporte | conj soporte |
| 30 | 667277 | 1 | Bearing cone | cône de roulement | Lagerkegel | cone do rolamento | cono del conj |
| 31 | 667278 | 1 | Bearing cup | coupelle de roul | Lagerschale | copo do rolamento | taza del coj |
| 32 | 815040 | 1 | Spacer kit | entretoises jeu | Distanzteil Satz | espaçador jôgo | espaciador jgo |
| 33 | ‡112354 | - | Shim .004 | cale-0,10MM | Beilage-0,10MM | calço-0,10MM | planchita-0,10MM |
| 34 | ‡125578 | - | Shim .007 | cale-0,18MM | Beilage-0,18MM | calço-0,18MM | planchita-0,18MM |
| 35 | ‡125577 | - | Shim .010 | cale-0,25MM | Beilage-0,25MM | calço-0,25MM | planchita-0,25MM |

[1] No longer available. Inc 1➡43
[1] N'est plus disponible, comprend 1➡43
[1] Nucht mehr erhältlich, einschl 1➡43
[1] Não está mais disponível, incl 1➡43
[1] No se produce más, inc 1➡43

[2] Inc. 42 & 43

[3] Inc 12, 14, 22 & 23

[4] Inc. 15 & 25

[5] Inc F, 12, 14, 17➡23

[6] Inc C,D, 12➡14, 16➡23

[7] Inc. B, 42 & 43

[8] Inc 18 & 21

[9] See G

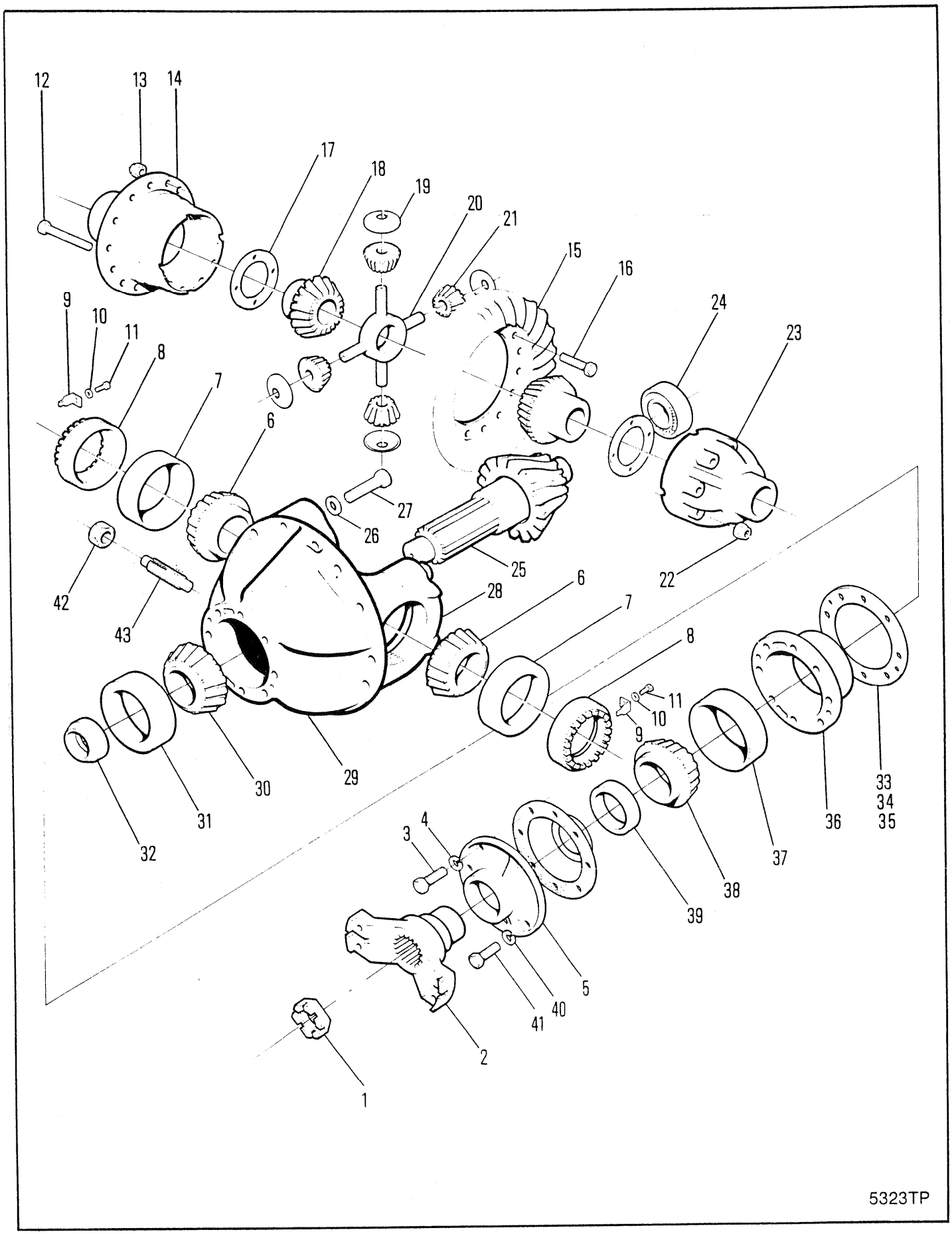
12
13
14
17
18
19
20
21
15
16
24
23
9
10
11
8
7
6
27
26
25
22
42
43
28
6
7
8
11
10
9
33
34
35
36
37
38
39
30
29
31
32
3
4
5
40
41
2
1
5323TP

# DIFFERENTIAL & CARRIER ASSEMBLY, FRONT-17600
# ENSEMBLE DE DIFFÉRENTIEL & PORTE-PLAN, AVANT-17600
# DIFFERENTIAL & TRÄGER VOLLSTÄNDIG, VORNE-17600
# CONJUNTO DO DIFERENCIAL & SUPORTE, DIANTEIRO-17600
# CONJUNTO DE DIFERENCIAL & SOPORTE, DELANTERO-17600

| No. | Part No. | Qty | Description | Description | Benennung | Descrição | Descripción |
|---|---|---|---|---|---|---|---|
| 36 | **124041** | 1 | Pinion brg cage | cage roul de pign | Ritzellagerkäfig | grade rol pinhão | jaula coj piñon |
| 37 | **675257** | 1 | Bearing cup | coupelle de roul | Lagerschale | copo do rolamento | taza del coj |
| 38 | **710288** | 1 | Bearing cone | cône de roulement | Lagerkegel | cone do rolamento | cono del conj |
| 39 | **127989** | 1 | Oil seal | jnt étanchéité huile | Öldichtung | vedação de óleo | sello de aceite |
| 40 | **4E000009** | 5 | Lockwasher | rondelle frein | Sicherungsscheibe | arruela de pressão | arandela seguridad |
| 41 | **17C000936** | 5 | Bolt | boulon | Bolzen | parafuso | bulón |
| 42 | **8D000014** | 1 | Nut | écrou | Mutter | porca | tuerca |
| 43 | **123800** | 1 | Screw | vis | Schraube | parafuso | tornillo |

[1] No longer available. Inc 1➡43
[1] N'est plus disponible, comprend 1➡43
[1] Nucht mehr erhältlich, einschl 1➡43
[1] Não está mais disponível, incl 1➡43
[1] No se produce más, inc 1➡43

[2] Inc. 42 & 43

[3] Inc 12, 14, 22 & 23

[4] Inc. 15 & 25

[5] Inc F, 12, 14, 17➡23

[6] Inc C,D, 12➡14, 16➡23

[7] Inc. B, 42 & 43

[8] Inc 18 & 21

[9] See G

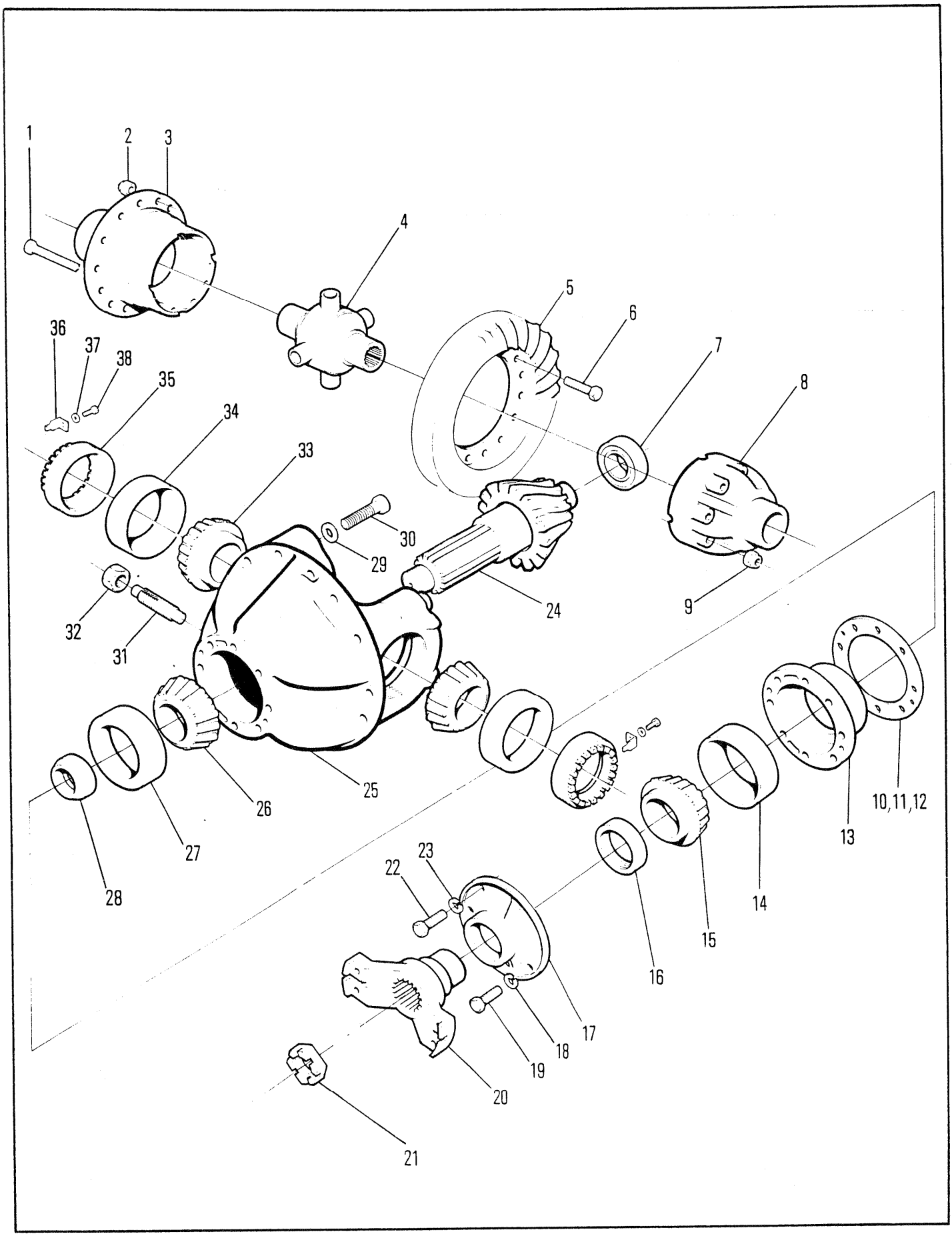
1
2
3
4
5
6
7
8
9
10,11,12
13
14
15
16
17
18
19
20
21
22
23
24
25
26
27
28
29
30
31
32
33
34
35
36
37
38

# DIFFERENTIAL & CARRIER ASSEMBLY, FRONT-17900 & 17800
# ENSEMBLE DE DIFFÉRENTIEL & PORTE-PLAN, AVANT-17900 & 17800
# DIFFERENTIAL & TRÄGER VOLLSTÄNDIG, VORNE-17900 & 17800
# CONJUNTO DO DIFERENCIAL & SUPORTE, DIANTEIRO-17900 & 17800
# CONJUNTO DE DIFERENCIAL & SOPORTE, DELANTERO-17900 & 17800

| No. | Part No. | Qty | Description | Description | Benennung | Descrição | Descripción |
|---|---|---|---|---|---|---|---|
| A | [1]127994 | 1 | Diff&Carr assy | ens dif porte-plan | Diff&Träger voll | conj difer&sup | conj difer&sop |
| B | [2]124436 | 1 | Diff case assy | boitier differential ens | Differentialgehäuse voll | dif carcaça cj | dif carcasa cj |
| C | [3]124435 | 1 | Diff body | corps de diff | Differentialkrper | corpo do dif | cuerpo diferenc |
| D | [4]112279 | 1 | Carr & cap | bouchon&porteur | Träger&Verschluss | cobert&veiculo | capota&transportador |
| E | [6]118150 | 1 | Rng gear&pin set | ens cour dentée goup | Tellerrad&Ritzlstz | jogo coroa&pinhão | jg corona&pasador |
| F | [7]124886 | 1 | Diff assy | différential ens | Differential voll | diferencial cj | diferencial cj |
| 1 | 100174 | 8 | Bolt | boulon | Bolzen | parafuso | bulón |
| 2 | 104182 | 8 | Nut | écrou | Mutter | porca | tuerca |
| 3 | ------ | 1 | Flange half | demi-flasque | Flanschhlfte | meia flange | media brida |
| 4 | 125600 | 1 | No-spin unit | ens anti-patinage | No-spin Anlage | conj anti-patinante | conj anti-patinaje |
| 5 | ------ | 1 | Ring gear | couronne dentée | Zahnkranz | corõa | corona |
| 6 | 100176 | 12 | Bolt | boulon | Bolzen | parafuso | bulón |
| 7 | 675536 | 1 | Bearing | palier | Lager | mancal | cojinete |
| 8 | ------ | 1 | Plain half | môtié lisse | Glatte Hlfte | metada simples | mitad sencilla |
| 9 | 106762 | 12 | Washer | rondelle | Scheibe | arruela | arandela |
| 10 | [5]112354 | - | Shim | cale | Beilage | calço | planchita |
| 11 | ‡125576 | 19 | Shim .007 | cale-0,18MM | Beilage-0,18MM | calço-0,18MM | planchita-0,18MM |
| 12 | ‡125577 | 19 | Shim .010 | cale-0,25MM | Beilage-0,25MM | calço-0,25MM | planchita-0,25MM |
| 13 | 124041 | 1 | Pinion brg cage | cage roul de pign | Ritzellagerkäfig | grade rol pinhão | jaula coj piñon |
| 14 | 675257 | 1 | Bearing cup | coupelle de roul | Lagerschale | copo do rolamento | taza del coj |
| 15 | 710288 | 1 | Bearing cone | cône de roulement | Lagerkegel | cone do rolamento | cono del conj |
| 16 | 127989 | 1 | Oil seal | jnt étanchéité huile | Öldichtung | vedação de óleo | sello de aceite |
| 17 | 112352 | 1 | Retainer | arrêtoir | Halterung | retentor | retén |
| 18 | 4E000005 | 5 | Lockwasher | rondelle frein | Sicherungsscheibe | arruela de pressão | arandela seguridad |
| 19 | 17C000932 | 5 | Bolt | boulon | Bolzen | parafuso | bulón |
| 20 | 106081 | 1 | Flange | flange | Flansch | bride | brida |
| 21 | 2107447 | 1 | Nut | écrou | Mutter | porca | tuerca |
| 22 | 17C000828 | 1 | Bolt | boulon | Bolzen | parafuso | bulón |
| 23 | 4E000008 | 1 | Lockwasher | rondelle frein | Sicherungsscheibe | arruela de pressão | arandela seguridad |
| 24 | ------ | 1 | Pinion | pignon | Ritzel | pinhão | pion |
| 25 | ------ | 1 | Housing | botier | Gehuse | carcaça | carcasa |
| 26 | 667277 | 1 | Bearing cone | cône de roulement | Lagerkegel | cone do rolamento | cono del conj |
| 27 | 667278 | 1 | Bearing cup | coupelle de roul | Lagerschale | copo do rolamento | taza del coj |
| 28 | 815040 | 1 | Spacer kit | entretoises jeu | Distanzteil Satz | espaçador jôgo | espaciador jgo |
| 29 | 4E000006 | 4 | Lockwasher | rondelle frein | Sicherungsscheibe | arruela de pressão | arandela seguridad |
| 30 | 123830 | 4 | Capscrew | vis àtête | Kopfschraube | parafuso de cabeça | tornilla de presió |
| 31 | 123800 | 1 | Screw | vis | Schraube | parafuso | tornillo |
| 32 | 8D000014 | 1 | Nut | écrou | Mutter | porca | tuerca |
| 33 | 675248 | 2 | Bearing cone | cône de roulement | Lagerkegel | cone do rolamento | cono del conj |
| 34 | 675249 | 2 | Bearing cup | coupelle de roul | Lagerschale | copo do rolamento | taza del coj |
| 35 | 122765 | 2 | Adjusting nut | vis dajustage | Einstellmutter | porca de ajuste | tuerca de ajuste |
| 36 | 100941 | 2 | Nut lock | frein décrou | Scraubensicherung | contraporca | contratuerca |
| 37 | 4E000006 | 2 | Lockwasher | rondelle frein | Sicherungsscheibe | arruela de pressão | arandela seguridad |
| 38 | 1C000614 | 2 | Bolt | boulon | Bolzen | parafuso | bulón |

[1] No longer available, Inc B,C,D,E,F 1➞38
[1] N'est plus disponible,comprend B,C,D,E,F 1➞38
[1] Nucht mehr erhältlich, einschl B,C,D,E,F, 1➞38
[1] Não está mais disponivel, incl. B,C,D,E,F, 1➞38
[1] No se produce más, inc. B,C,D,E, 1➞38

[2] Inc 1, 3, 8 & 9

[3] Inc B,1, 3, 4, 8 & 9

[4] Inc 29 & 30

[5] Quantity two (2) needed when ordering one (1) 112354 Shim
[5] Quantité (2) lors de la commande de (1) cale 112354
[5] Menge (2) bei Bestellung von (1) Beilag 112354
[5] Quantidade (2) pedir quando necessitar (1) Calço no. 112354
[5] Cantidad Se necesitan (2) cuando se ordena (1) Planchita 112354

[6] Inc 5 & 24

[7] Inc B, E, 1➞4, 6, 8 & 9

| | |
|---|---|
| 666CUM | 500D-1232-CAC➞500G-9999-CAC |
| 666GM | 513E-101-CAC➞513G-9999-CAC |
| 666GMGR | 515A-101-CAC➞515A-9999-CAC |

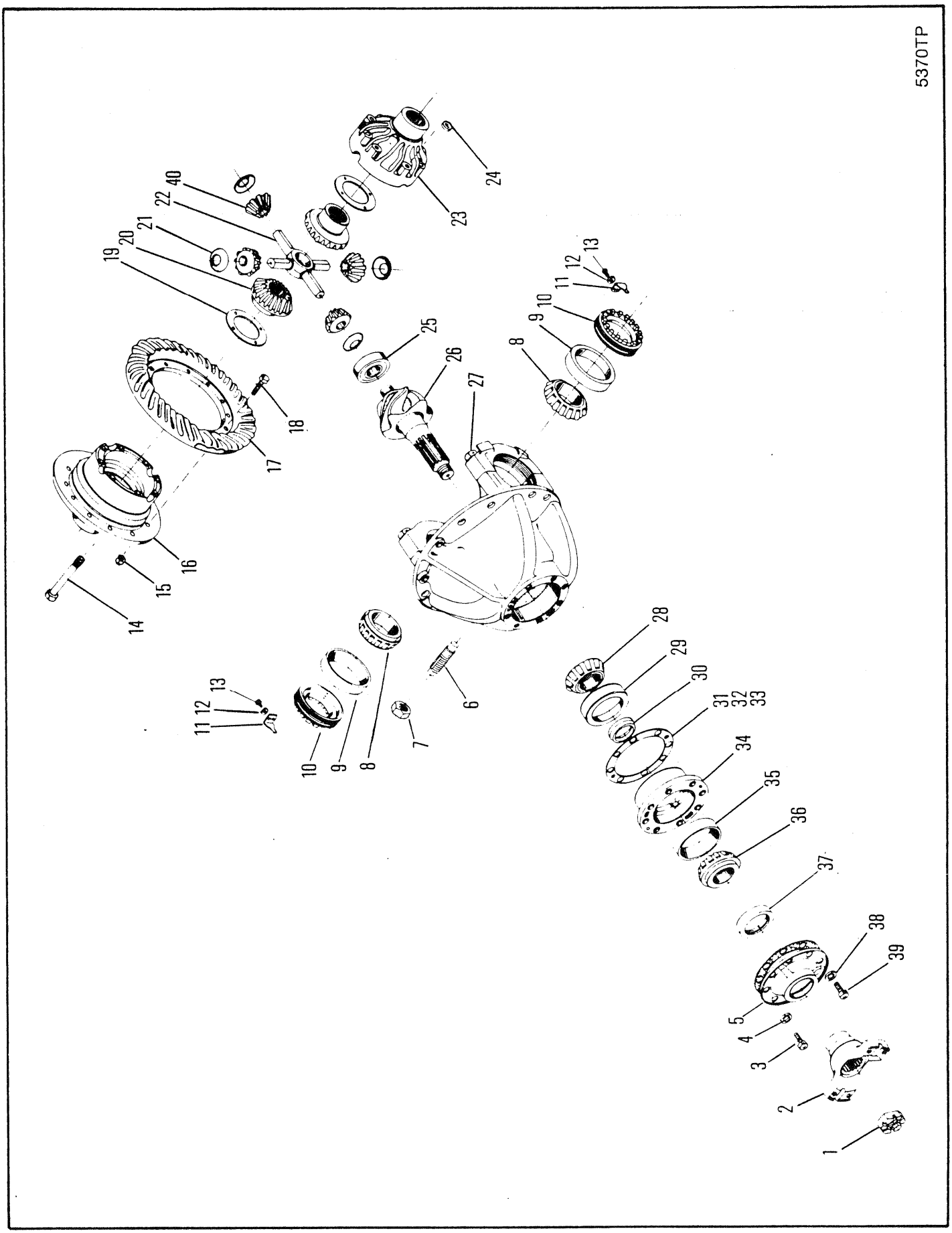
5370TP
1
2
3
4
5
6
7
8
9
10
11
12
13
14
15
16
17
18
19
20
21
22
23
24
25
26
27
28
29
30
31
32
33
34
35
36
37
38
39
40

# DIFFERENTIAL & CARRIER ASSEMBLY, FRONT FD-17900 & FD-17800
# ENSEMBLE DE DIFFÉRENTIEL & PORTE-PLAN, AVANT FD-17900 & FD-17800
# DIFFERENTIAL & TRÄGER VOLLSTÄNDIG, VORNE FD-17900 & FD-17800
# CONJUNTO DO DIFERENCIAL & SUPORTE, DIANTEIRO FD-17900 & FD-17800
# CONJUNTO DE DIFERENCIAL & SOPORTE, DELANTERO FD-17900 & FD-17800

| No. | Part No. | Qty | Description | Description | Benennung | Descrição | Descripción |
|---|---|---|---|---|---|---|---|
| A | [1]127993 | 1 | Diff&Carr assy | ens dif porte-plan | Diff&Träger voll | conj difer&sup | conj difer&sop |
| B | [2]126894 | 1 | Diff case assy | boitier differential ens | Differentialgehäuse voll | dif carcaça cj | dif carcasa cj |
| C | [3]124444 | 1 | Diff body | corps de diff | Differentialkrper | corpo do dif | cuerpo diferenc |
| D | [4]112279 | 1 | Carr & cap | bouchon&porteur | Träger&Verschluss | cobert&veiculo | capota&transportador |
| E | [5]118150 | 1 | Rng gear&pin set | ens cour dentée goup | Tellerrad&Ritzlstz | jogo coroa&pinhão | jg corona&pasador |
| F | [6]124179 | 1 | Diff assy | différential ens | Differential voll | diferencial cj | diferencial cj |
| 1 | 2107447 | 1 | Nut | écrou | Mutter | porca | tuerca |
| 2 | 106081 | 1 | Flange | bride | Flansch | flange | brida |
| 3 | 17C000828 | 1 | Bolt | boulon | Bolzen | parafuso | bulón |
| 4 | 4E000008 | 1 | Lockwasher | rondelle frein | Sicherungsscheibe | arruela de pressão | arandela seguridad |
| 5 | 112352 | 1 | Retainer | arrêtoir | Halterung | retentor | retén |
| 6 | 123800 | 1 | Screw | vis | Schraube | parafuso | tornillo |
| 7 | 8D000014 | 1 | Nut | écrou | Mutter | porca | tuerca |
| 8 | 675248 | 2 | Bearing cone | cône de roulement | Lagerkegel | cone do rolamento | cono del conj |
| 9 | 675249 | 2 | Bearing cup | coupelle de roul | Lagerschale | copo do rolamento | taza del coj |
| 10 | 122765 | 2 | Adjusting nut | vis dajustage | Einstellmutter | porca de ajuste | tuerca de ajuste |
| 11 | 100941 | 2 | Nut lock | frein décrou | Scraubensicherung | contraporca | contratuerca |
| 12 | 4E000006 | 2 | Lockwasher | rondelle frein | Sicherungsscheibe | arruela de pressão | arandela seguridad |
| 13 | 1C000614 | 2 | Bolt | boulon | Bolzen | parafuso | bulón |
| 14 | 17C000856 | 12 | Bolt | boulon | Bolzen | parafuso | bulón |
| 15 | 86D000008 | 12 | Nut | écrou | Mutter | porca | tuerca |
| 16 | ------- | 1 | Flange half | demi-flasque | Flanschhlfte | meia flange | media brida |
| 17 | ------- | 1 | Ring gear | couronne dentée | Zahnkranz | corõa | corona |
| 18 | 100176 | 12 | Bolt | boulon | Bolzen | parafuso | bulón |
| 19 | 100173 | 2 | Washer | rondelle | Scheibe | arruela | arandela |
| 20 | 100170 | 2 | Gear | engrenage | Zahnrad | engrenagem | engranaje |
| 21 | 100172 | 4 | Washer | rondelle | Scheibe | arruela | arandela |
| 22 | 100171 | 1 | Spider | croisillon | Kreuzgelenk | cruzeta | cruceta |
| 23 | ------ | 1 | Plain half | môtié lisse | Glatte Hlfte | metada simples | mitad sencilla |
| 24 | 106762 | 12 | Washer | rondelle | Scheibe | arruela | arandela |
| 25 | 675536 | 1 | Bearing | palier | Lager | mancal | cojinete |
| 26 | ------ | 1 | Pinion | pignon | Ritzel | pinhão | pion |
| 27 | ------ | 1 | Diff carrier | | | | |
| 28 | 667277 | 1 | Bearing cone | cône de roulement | Lagerkegel | cone do rolamento | cono del conj |
| 29 | 667278 | 1 | Bearing cup | coupelle de roul | Lagerschale | copo do rolamento | taza del coj |
| 30 | 815040 | 1 | Spacer kit | entretoises jeu | Distanzteil Satz | espaçador jôgo | espaciador jgo |
| 31 | [7]112354 | - | Shim | cale | Beilage | calço | planchita |
| 32 | 125576 | - | Shim .007 | cale-0,18MM | Beilage-0,18MM | calço-0,18MM | planchita-0,18MM |
| 33 | 125577 | - | Shim .010 | cale-0,25MM | Beilage-0,25MM | calço-0,25MM | planchita-0,25MM |
| 34 | 124041 | 1 | Pinion brg cage | cage roul de pign | Ritzellagerkäfig | grade rol pinhão | jaula coj piñon |
| 35 | 675257 | 1 | Bearing cup | coupelle de roul | Lagerschale | copo do rolamento | taza del coj |
| 36 | 710288 | 1 | Bearing cone | cône de roulement | Lagerkegel | cone do rolamento | cono del conj |
| 37 | 127989 | 1 | Oil seal | jnt étanchéité huile | Öldichtung | vedação de óleo | sello de aceite |
| 38 | 4E000009 | 5 | Lockwasher | rondelle frein | Sicherungsscheibe | arruela de pressão | arandela seguridad |
| 39 | 17C000932 | 5 | Bolt | boulon | Bolzen | parafuso | bulón |
| 40 | 816099 | 4 | Gear | engrenage | Zahnrad | engrenagem | engranaje |

[1] No longer available, Inc B,C,D,E,F 1➡39
[1] N'est plus disponible,comprend B,C,D,E,F 1➡39
[1] Nucht mehr erhältlich, einschl B,C,D,E,F, 1➡39
[1] Não está mais disponível, incl. B,C,D,E,F, 1➡39
[1] No se produce más, inc. B,C,D,E, 1➡39

[2] Inc 14➡16, & 23

[3] Inc B,14➡16, 19➡23

[4] Inc 6,7 & 27

[5] Inc 17 & 26

[6] Inc B,C,E 15&18

[7] Quantity two (2) needed when ordering one (1) 112354 Shim
[7] Quantité (2) lors de la commande de (1) cale 112354
[7] Menge (2) bei Bestellung von (1) Beilag 112354
[7] Quantidade (2) pedir quando necessitar (1) Calço no. 112354
[7] Cantidad Se necesitan (2) cuando se ordena (1) Planchita 112354

| | |
|---|---|
| 666CUM | 500D-1232-CAC➡500G-9999-CAC |
| 666GM | 513E-101-CAC➡513G-9999-CAC |
| 666GMGR | 515A-101-CAC➡515A-9999-CAC |

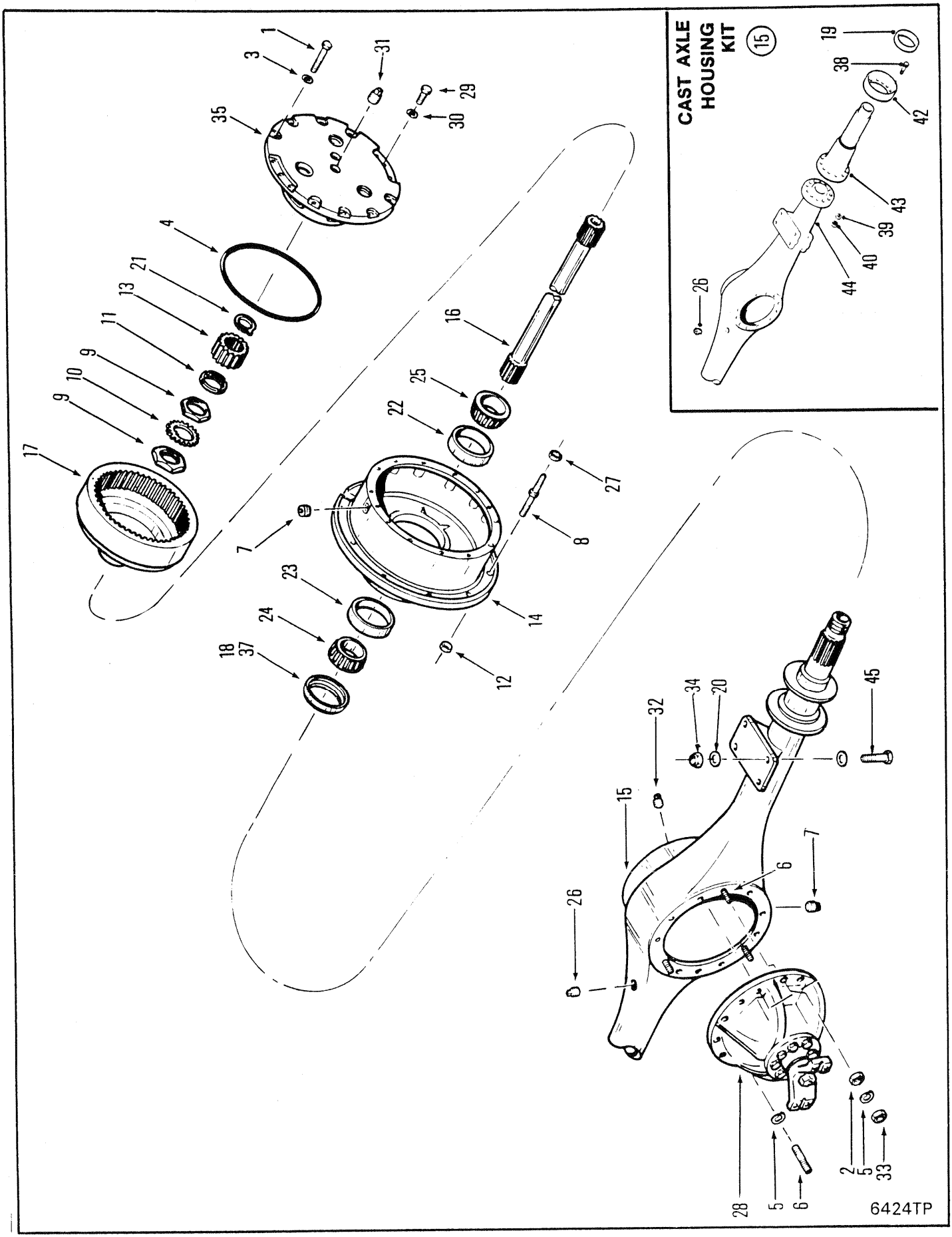
CAST AXLE HOUSING KIT
15
6424TP

# AXLE ASSEMBLY, REAR-17800 HEAVY DUTY ⊠
# ESSIEU AR ENSEMBLE-17800 SERVICE DUR ⊠
# ACHSE VOLLSTÄNDIG, HINTERRADANTRIEB-17800 HOCHLEISTUNGSAUSFÜHRUNG
# EIXO TRASEIRO, CONJUNTO-17800 SERVIÇO PESADO
# EJE TRASERO, CONJUNTO-17800 EXTRA-FUERTE REFORZADO

| No. | Part No. | Qty | Description | Description | Benennung | Descrição | Descripción |
|---|---|---|---|---|---|---|---|
| A | [1]191801 | 1 | Rear drive axle | ess de trac AR | Hinterantribsachse | eixo acion tras | eje impuls post |
| 1 | 100970 | 24 | Bolt | boulon | Bolzen | parafuso | bulón |
| 2 | 103216 | 3 | Dowel | goujon | Stift | espiga | espiga |
| 3 | 106762 | 24 | Washer | rondelle | Scheibe | arruela | arandela |
| 4 | 107348 | 2 | Ring | anneau | Ring | anel | anillo |
| 5 | 112278 | 14 | Washer | rondelle | Scheibe | arruela | arandela |
| 6 | 119270 | 14 | Stud | goujon | Stift | prisioneiro | espárrago |
| 7 | 119469 | 3 | Plug | bouchon | Stopfen | bujão | tapón |
| 8 | 113929 | 20 | Stud | goujon | Stift | prisioneiro | espárrago |
| 9 | 121013 | 4 | Nut | écrou | Mutter | porca | tuerca |
| 10 | 121014 | 2 | Nut lock | frein décrou | Scraubensicherung | contraporca | contratuerca |
| 11 | 121015 | 2 | Sleeve | manchon | Muffe | luva | manguito |
| 12 | 86D000012 | 20 | Nut | écrou | Mutter | porca | tuerca |
| 13 | 121804 | 2 | Sun gear | engrenage principal | Umlaufring | engrenagem solar | engrenaje planetario |
| 14 | [2]121851 | 2 | Hub assy | moyeu ens | Nabe vollst | cubo conj | cubo conj |
| 15 | [4]841037 | 1 | Housing kit | ens boitier | Gehäuse vollst | conj carcaça | juego carcasa |
| 16 | 123672 | 2 | Shaft | arbre | Welle | ávore | árbol |
| 17 | 123904 | 2 | Int gear&hub | ingren int&moy | Internes Rad&Nabe | cubo e engr int | engr y cubo int |
| 18 | 124325 | 2 | Seal | joint étanchéité | Dichtung | vedador | sello |
| 19 | 128117 | 2 | Seal | joint étanchéité | Dichtung | vedador | sello |
| 20 | 1907578 | 8 | Washer | rondelle | Scheibe | arruela | arandela |
| 21 | 224028 | 2 | Ring | anneau | Ring | anel | anillo |
| 22 | 668553 | 2 | Cup | cuvette | Schale | capa | cubeta |
| 23 | 672004 | 2 | Cup | cuvette | Schale | capa | cubeta |
| 24 | 672005 | 2 | Cone | cône | Kegel | cone | cono |
| 25 | 675261 | 2 | Cone | cône | Kegel | cone | cono |
| 26 | 955743 | 1 | Breather assy | souffleur | Entlüftereinheit | conj de respirador | conj respirador |
| 27 | 1900649 | 20 | Nut | écrou | Mutter | porca | tuerca |
| 28 | ○--------- | 1 | Diff carrier assy | ens chassis port dif | Träger Difflagr voll | conj suporte dif | conj sopor |
| 29 | 1C000808 | 4 | Bolt | boulon | Bolzen | parafuso | bulón |
| 30 | 3E000008 | 4 | Lockwasher | rondelle frein | Sicherungsscheibe | arruela de pressão | arandela seguridad |
| 31 | 11F000004 | 2 | Plug | bouchon | Stopfen | bujão | tapón |
| 32 | 11F000012 | 1 | Plug | bouchon | Stopfen | bujão | tapón |
| 33 | 64D000007 | 4 | Nut | écrou | Mutter | porca | tuerca |
| 34 | 18D000014 | 8 | Nut | écrou | Mutter | porca | tuerca |
| 35 | ○--------- | - | Planet carr assy | port planétaire ens | Planetentraeger voll | sup planet conj | sop planet conj |
| 36 | 19F000012 | 1 | Bushing | chemise | Buchse | bucha | buje |
| 37 | [3]--------- | 2 | Seal | joint étanchéité | Dichtung | vedador | sello |
| 38 | 117336 | 20 | Stud | goujon | Stift | prisioneiro | espárrago |
| 39 | 104412 | 20 | Washer | rondelle | Scheibe | arruela | arandela |
| 40 | 106998 | 20 | Nut | écrou | Mutter | porca | tuerca |
| 41 | 18C014128 | 8 | Bolt | boulon | Bolzen | parafuso | bulón |
| 42 | 2107398 | 2 | Seal | joint étanchéité | Dichtung | vedador | sello |
| 43 | 816098 | 2 | Spindle kit | ensemble fusée | Spindel vollst | jôgo de haste | juego de huso |
| 44 | 2106473 | 1 | Housing | botier | Gehuse | carcaça | carcasa |

[1] Inc. 1➡44

[2] Inc 8, 12 & 24

[3] When 121012 is used alone, replace with 128117 seal. When 121012 is used with 121169 sleeve, replace the pair with 124325 oil seal.
[3] Lorsque 121012 est utilisé seul, le remplacer par le joint 128117. Lorsque 121012 est utilisé avec le manchon 121169, remplacer les deux par le joint d'etanchéité d'huile 124325.
[3] Wenn Posten 121012 allein verwendet wird, durch Dichtung 128117 ersetzen. Bei Verwendung von 121012 mit Buchse 121169, das Paar durch Ö ldichtung 124325 ersetzén.
[3] Se for utilizado somente 121012, substituir por junta 128117. Se 121012 for uuilizado com luva 121169, substituir o par por junta de o leo 124325.
[3] Al utilizar 121012 solo, reemplazar con selladura 128117. Al utilizar 121012 con camisa 121169, reemplazar el par n selladura para aceite 124325.

[4] Inc 36, 38➡44

666CUM 500D-1232-CAC➡500G-9999-CAC
666GM 513E-101-CAC➡513G-9999-CAC

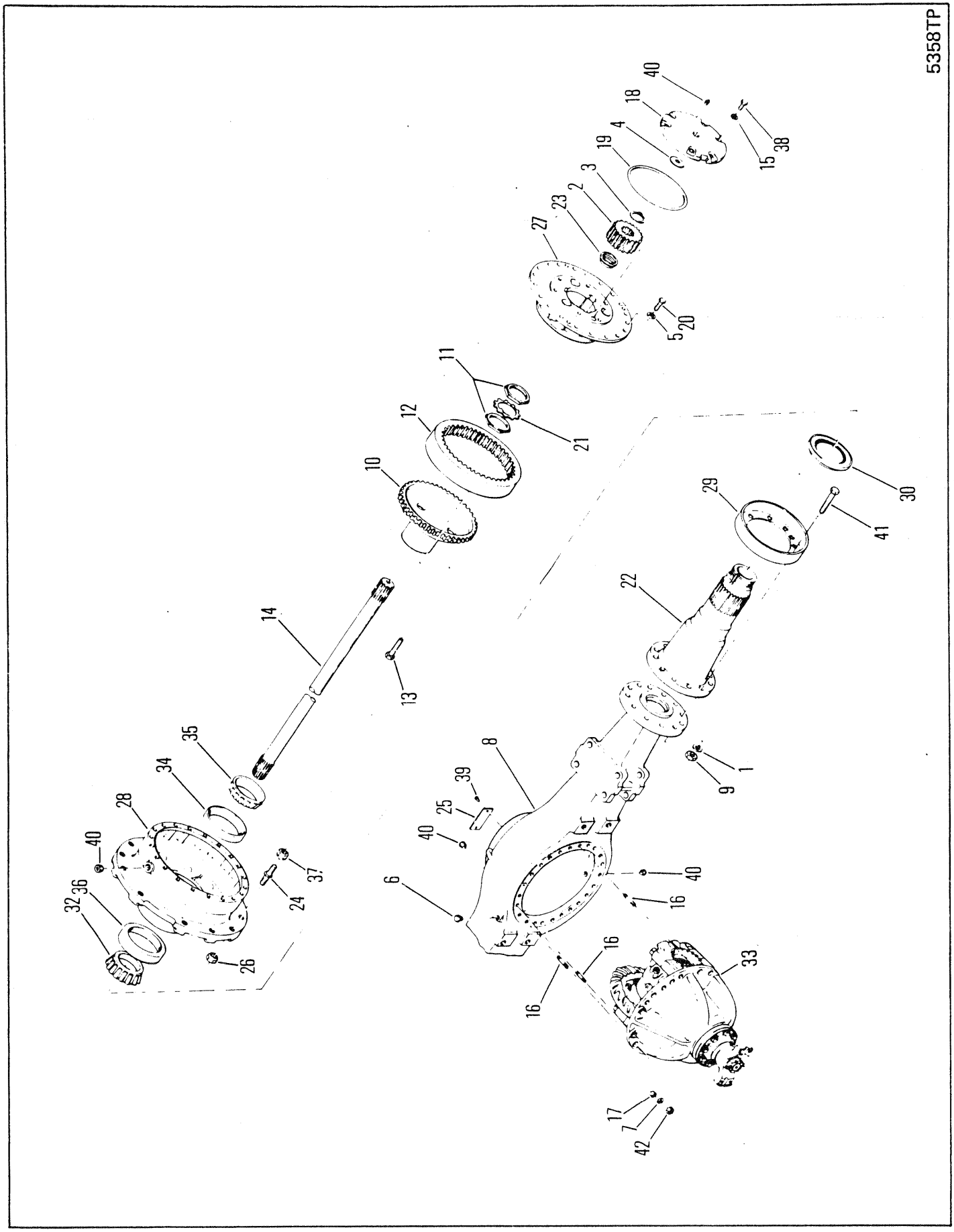
5358TP
40
18
4
19
3
2
23
27
15
38
5
20
11
12
21
10
29
30
41
22
14
13
35
34
28
40
32
36
37
24
26
8
39
25
40
6
1
9
40
16
16
16
33
17
7
42

# AXLE ASSEMBLY, REAR RD 19500 HEAVY DUTY
# ESSIEU AR ENSEMBLE RD 19500 SERVICE DUR
# ACHSE VOLLSTÄNDIG, HINTERRADANTRIEB RD 19500 HOCHLEISTUNGSAUSFÜHRUNG
# EIXO TRASEIRO, CONJUNTO RD 19500 SERVIÇO PESADO
# EJE TRASERO, CONJUNTO RD 19500 EXTRA-FUERTE REFORZADO

| No. | Part No. | Qty | Description | Description | Benennung | Descrição | Descripción |
|---|---|---|---|---|---|---|---|
| A | **191370** | 1 | Axle | essieu | Achse | eixo | eje |
| B | **121831** | 2 | Housing | botier | Gehuse | carcaça | carcasa |
| C | **110552** | 2 | Int gear&hub | ingren int&moy | Internes Rad&Nabe | cubo e engr int | engr y cubo int |
| 1 | **104412** | 18 | Washer | rondelle | Scheibe | arruela | arandela |
| 2 | **106246** | 2 | Sun gear | engrenage principal | Umlaufring | engrenagem solar | engrenaje planetario |
| 3 | **106247** | 2 | Snap ring | circlips | Sperring | anel de trava | anillo de retención |
| 4 | **106457** | 2 | Washer | rondelle | Scheibe | arruela | arandela |
| 5 | **106547** | 40 | Washer | rondelle | Scheibe | arruela | arandela |
| 6 | **106656** | 1 | Breather | reniflard | Entlüfter | respiradouro | respiradero |
| 7 | **106762** | 14 | Washer | rondelle | Scheibe | arruela | arandela |
| 8 | [2]**107100** | 1 | Housing | botier | Gehuse | carcaça | carcasa |
| 9 | **64D000010** | 20 | Nut | écrou | Mutter | porca | tuerca |
| 10 | **110553** | 2 | Hub | moyeu | Nabe | cubo | cubo |
| 11 | **110559** | 4 | Nut spindle | ecrou fusée | Mutterspindle | porca carretel | tuerca buso |
| 12 | **110622** | 2 | Gear | engrenage | Zahnrad | engrenagem | engranaje |
| 13 | **110624** | 8 | Bolt | boulon | Bolzen | parafuso | bulón |
| 14 | **112077** | 2 | Shaft | arbre | Welle | ávore | árbol |
| 15 | **112278** | 12 | Washer | rondelle | Scheibe | arruela | arandela |
| 16 | **112286** | 14 | Stud | goujon | Stift | prisioneiro | espárrago |
| 17 | **112287** | 3 | Dowel | goujon | Stift | espiga | espiga |
| 18 | **113289** | 2 | Thrust cap | chapeau butée | Druckkappe | tampa carga axial | tapa empuje |
| 19 | **113292** | 2 | O-ring | joint torique | O Ring | anel-O | anillo-O |
| 20 | **117225** | 40 | Bolt | boulon | Bolzen | parafuso | bulón |
| 21 | **118786** | 2 | Lock | serrure | Schloss | fechadura | cerradura |
| 22 | **119852** | 2 | Spindle end | bout de fuseau | Wellenende | term do carretel | extremo del huso |
| 23 | **119853** | 2 | Thrust ring | bague de butée | Druckring | anel de empuxo | anillo de empuje |
| 24 | **113929** | 20 | Stud | goujon | Stift | prisioneiro | espárrago |
| 25 | **120707** | 1 | Name plate | plaque duconstructr | Namensschild | placa do nome | placa de nombre |
| 26 | **86D000012** | 20 | Nut | écrou | Mutter | porca | tuerca |
| 27 | □------ | 1 | Planet&Carr assy | port planétaire ens | Planeträger vollst | sup planet conj | sup planet conj |
| 28 | **121838** | 2 | Hub&cup assy | ens moyeu&coupelle | Nabe&Schale vollst | conj cubo&copo | conj cubo&cubeta |
| 29 | **2107400** | 2 | Seal | joint étanchéité | Dichtung | vedador | sello |
| 30 | [1]**125248** | 2 | Seal | joint étanchéité | Dichtung | vedador | sello |
| 31 | **125769** | 2 | Seal | joint étanchéité | Dichtung | vedador | sello |
| 32 | **127819** | 2 | Inner cone | cône interne | Innenkegel | cone interior | cono interno |
| 33 | □------ | 1 | Diff&Carrier assy | ens dif porte-plan | Diff&Träger voll | conj difer&sup | conj difer&sop |
| 34 | **742262** | 2 | Cup | cuvette | Schale | capa | cubeta |
| 35 | **742263** | 2 | Cone | cône | Kegel | cone | cono |
| 36 | **774024** | 2 | Cup | cuvette | Schale | capa | cubeta |
| 37 | **1900649** | 20 | Nut | écrou | Mutter | porca | tuerca |
| 38 | **1C0000720** | 12 | Bolt | boulon | Bolzen | parafuso | bulón |
| 39 | **6C0000605** | 2 | Screw | vis | Schraube | parafuso | tornillo |
| 40 | **11F000012** | 6 | Plug | bouchon | Stopfen | bujão | tapón |
| 41 | **18C001044** | 20 | Bolt | boulon | Bolzen | parafuso | bulón |
| 42 | **64D000008** | 14 | Nut | écrou | Mutter | porca | tuerca |

[1] When 125248 is used with 123937 wear sleeve, replace with 125769 oil seal
[1] Lorsque 125248 est utilisé avec le manchon d'usure 123937, il remplace le joint
[1] Wenn Posten 125248 mit 123937-Verschleissbuchse verwendet wird, durch Öldichtung 125769 ersetzen.
[1] Quando for utilizado 125248 com luva de desgaste 123937, substituir por junta de óleo 125769
[1] Al utilizar 125248 con camisa de desgaste 123937, reemplazar con selladura para aceite 125769

[2] No longer available
[2] N'est plus disponible
[2] Nucht mehr erhältlich
[2] Não está mais disponível
[2] No se produce más

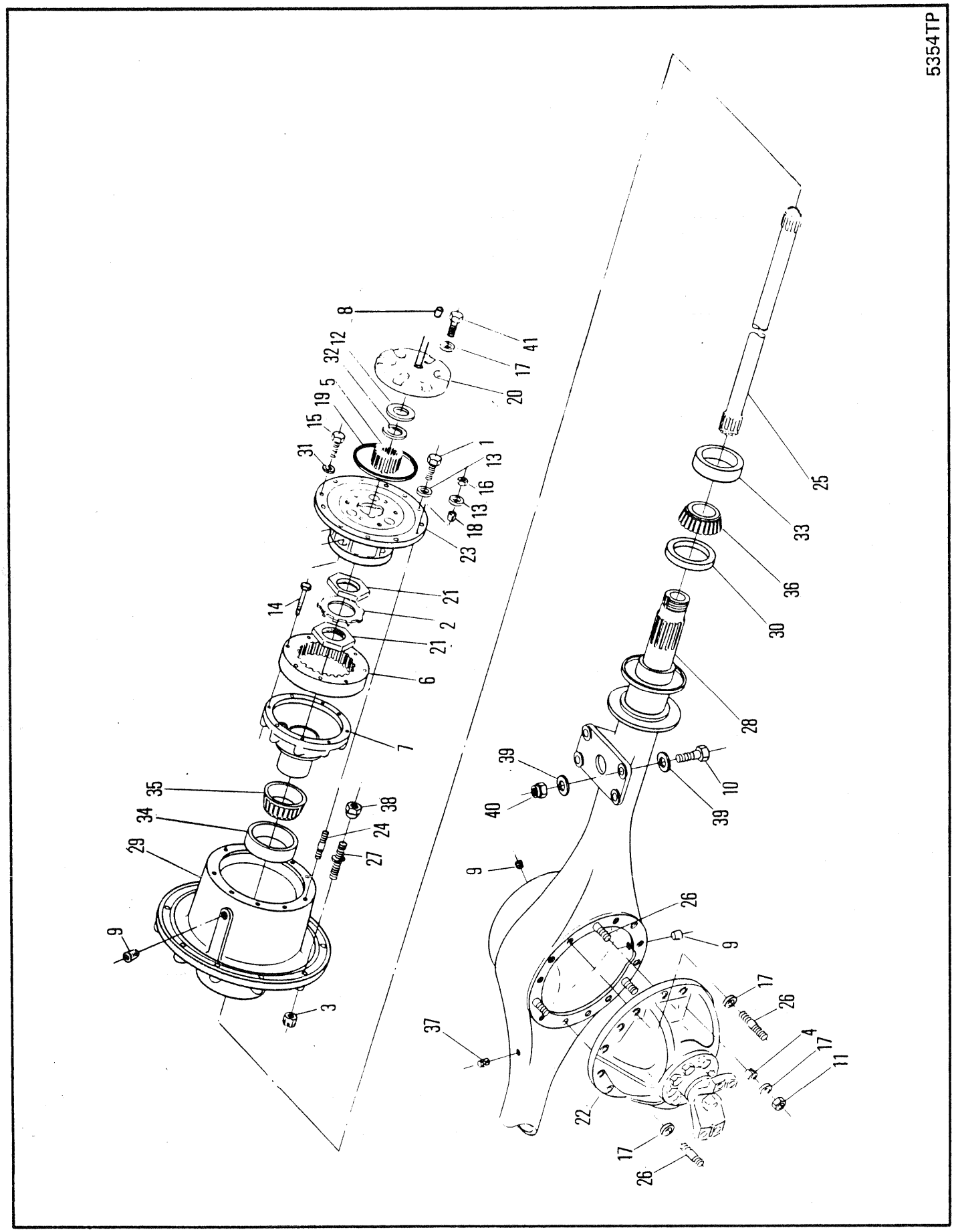
5354TP
8
12
32
5
19
15
31
1
13
16
13
18
23
41
17
20
25
33
36
30
28
21
2
21
6
7
14
35
34
29
9
3
38
24
27
39
40
10
39
9
26
9
17
26
4
17
11
37
22
17
26

# AXLE ASSEMBLY, REAR-17600 WIDE TRACK ⊠
# ESSIEU AR ENSEMBLE-17600 VOIE LARGE ⊠
# ACHSE VOLLSTÄNDIG, HINTERRADANTRIEB-17600 BREITSPUR ⊠
# EIXO TRASEIRO, CONJUNTO RD17600 BITOLA LARGA ⊠
# EJE TRASERO, CONJUNTO RD17600 RODADA ANCHA ⊠

| No. | Part No. | Qty | Description | Description | Benennung | Descrição | Descripción |
|---|---|---|---|---|---|---|---|
| A | [3]190930 | 1 | Axle assy | essieu ensemble | Achse vollst | eixo conjunto | eje conjunto |
| B | [1]107016 | 2 | Intrnal gear&hub | engren int&moy | Internes Rad&Nabe | cubo e engr int | engr y cubo int |
| 1 | 100970 | 10 | Bolt | boulon | Bolzen | parafuso | bulón |
| 2 | 101274 | 2 | Lock | serrure | Schloss | fechadura | cerradura |
| 3 | 103076 | 20 | Nut | écrou | Mutter | porca | tuerca |
| 4 | 103216 | 3 | Dowel | goujon | Stift | espiga | espiga |
| 5 | 106058 | 2 | Sun gear | engrenage principal | Umlaufring | engrenagem solar | engrenaje planetario |
| 6 | 106059 | 2 | Gear | engrenage | Zahnrad | engrenagem | engranaje |
| 7 | 113850 | 2 | Hub | moyeu | Nabe | cubo | cubo |
| 8 | 11F000004 | 2 | Plug | bouchon | Stopfen | bujão | tapón |
| 9 | 11F000012 | 4 | Plug | bouchon | Stopfen | bujão | tapón |
| 10 | 18C001256 | 8 | Bolt | boulon | Bolzen | parafuso | bulón |
| 11 | 64D000007 | 14 | Nut | écrou | Mutter | porca | tuerca |
| 12 | 106455 | 2 | Washer | rondelle | Scheibe | arruela | arandela |
| 13 | 106762 | 20 | Washer | rondelle | Scheibe | arruela | arandela |
| 14 | 106880 | 16 | Bolt | boulon | Bolzen | parafuso | bulón |
| 15 | 1C000720 | 12 | Screw | vis | Schraube | parafuso | tornillo |
| 16 | 64D000008 | 10 | Nut | écrou | Mutter | porca | tuerca |
| 17 | 112278 | 26 | Washer | rondelle | Scheibe | arruela | arandela |
| 18 | 112287 | 10 | Dowel | goujon | Stift | espiga | espiga |
| 19 | 114089 | 2 | Ring | anneau | Ring | anel | anillo |
| 20 | 114119 | 2 | Cap | chapeau | Kappe | tampa | tapa |
| 21 | 114433 | 4 | Nut | écrou | Mutter | porca | tuerca |
| 22 | O--------- | - | Diff&carr assy | ens dif&porte-plan | Diff&Trger voll | conj difer&sup | conj difer&sop |
| 23 | O--------- | - | Planet carr assy | port planétaire ens | Planetentraeger voll | sup planet conj | sop planet conj |
| 24 | 116419 | 10 | Stud | goujon | Stift | prisioneiro | espárrago |
| 25 | 117655 | 2 | Shaft | arbre | Welle | ávore | árbol |
| 26 | 119270 | 14 | Stud | goujon | Stift | prisioneiro | espárrago |
| 27 | 113929 | 20 | Stud | goujon | Stift | prisioneiro | espárrago |
| 28 | 121980 | 1 | Housing | botier | Gehuse | carcaça | carcasa |
| 29 | [2]122471 | 2 | Hub assy | moyeu ens | Nabe vollst | cubo conj | cubo conj |
| 30 | 122664 | 2 | Seal | joint étanchéité | Dichtung | vedador | sello |
| 31 | 3E000008 | 4 | Lockwasher | rondelle frein | Sicherungsscheibe | arruela de pressão | arandela seguridad |
| 32 | 224028 | 2 | Ring | anneau | Ring | anel | anillo |
| 33 | 658985 | 2 | Cup | cuvette | Schale | capa | cubeta |
| 34 | 672181 | 2 | Cup | cuvette | Schale | capa | cubeta |
| 35 | 672182 | 2 | Cone | cône | Kegel | cone | cono |
| 36 | 799408 | 2 | Cone | cône | Kegel | cone | cono |
| 37 | 955743 | 1 | Breather assy | souffleur | Entlüftereinheit | conj de respirador | conj respirador |
| 38 | 1900649 | 20 | Nut | écrou | Mutter | porca | tuerca |
| 39 | 1900671 | 16 | Washer | rondelle | Scheibe | arruela | arandela |
| 40 | 60D000012 | 8 | Nut | écrou | Mutter | porca | tuerca |
| 41 | 1C000720 | 12 | Bolt | boulon | Bolzen | parafuso | bulón |

[1] Inc 6, 7 & 38

[2] Inc 33

[3] Inc B, 1➞41

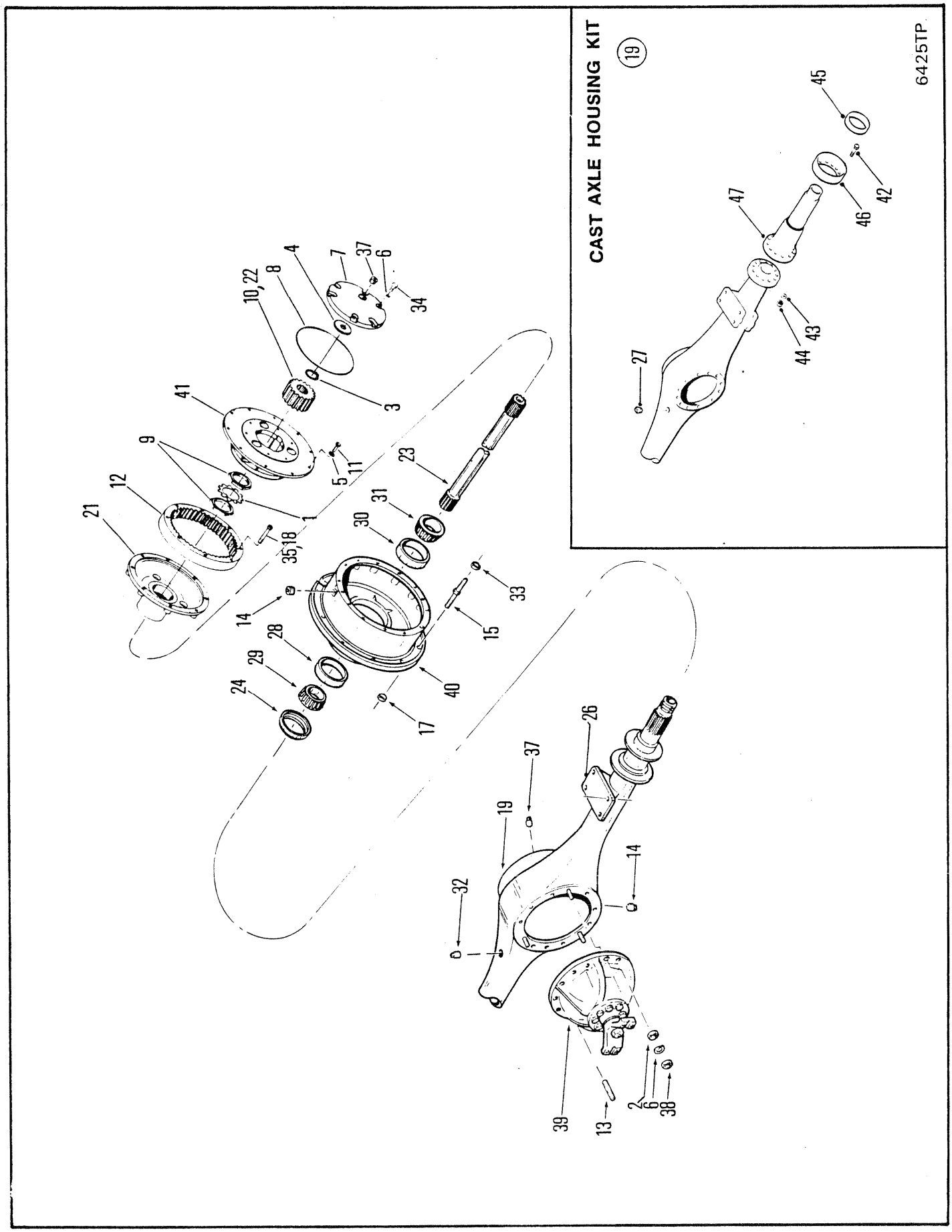
CAST AXLE HOUSING KIT
19
6425TP
1
2
3
4
5
6
7
8
9
10, 22
11
12
13
14
15
17
18
19
21
23
24
26
27
28
29
30
31
32
33
34
35
37
38
39
40
41
42
43
44
45
46
47

# AXLE ASSEMBLY, REAR RD-17900
# ESSIEU AR ENSEMBLE RD-17900
# ACHSE VOLLSTÄNDIG, HINTERRADANTRIEB RD-17900
# EIXO TRASEIRO, CONJUNTO RD-17900
# EJE TRASERO, CONJUNTO RD-17900

| No. | Part No. | Qty | Description | Description | Benennung | Descrição | Descripción |
|---|---|---|---|---|---|---|---|
| A | **192132** | 1 | Axle assy | essieu ensemble | Achse vollst | eixo conjunto | eje conjunto |
| B | [1]**127128** | 2 | Hub&Cup Assy | ens moyeu&coupelle | Nabe&Schale vollst | conj cubo&copo | conj cubo&cubeta |
| 1 | **101274** | 2 | Nut | écrou | Mutter | porca | tuerca |
| 2 | **103216** | 3 | Dowel | goujon | Stift | espiga | espiga |
| 3 | **106247** | 2 | Ring | anneau | Ring | anel | anillo |
| 4 | **106457** | 2 | Washer | rondelle | Scheibe | arruela | arandela |
| 5 | **106547** | 10 | Washer | rondelle | Scheibe | arruela | arandela |
| 6 | **112278** | 26 | Washer | rondelle | Scheibe | arruela | arandela |
| 7 | [2]**113289** | 2 | Cover assy | couvercle ens | Deckel vollst | tampa conj | tapa conj |
| 8 | **113292** | 2 | Ring | anneau | Ring | anel | anillo |
| 9 | **114433** | 4 | Nut | écrou | Mutter | porca | tuerca |
| 10 | **116588** | 2 | Sun gear | engrenage principal | Umlaufring | engrenagem solar | engrenaje planetario |
| 11 | **117225** | 10 | Capscrew | vis àtête | Kopfschraube | parafuso de cabeça | tornilla de presió |
| 12 | **119211** | 2 | Internal gear | engrenage interne | Innenrad | engr interna | engr interna |
| 13 | **119270** | 14 | Stud | goujon | Stift | prisioneiro | espárrago |
| 14 | **119469** | 3 | Plug | bouchon | Stopfen | bujão | tapón |
| 15 | **113929** | 20 | Stud | goujon | Stift | prisioneiro | espárrago |
| 16 | †**120707** | 1 | Name plate | plaque duconstructr | Namensschild | placa do nome | placa de nombre |
| 17 | **86D000012** | 20 | Nut | écrou | Mutter | porca | tuerca |
| 18 | †**122701** | 12 | Plate | plaque | Platte | placa | placa |
| 19 | [6]**841037** | 1 | Housing kit | ens boitier | Gehäuse vollst | conj carcaça | juego carcasa |
| 20 | [3]†**123514** | 2 | Gear & hub assy | engren et moyeu ens | Zahnrad & Nabe voll | engren & cubo conj | engran y cubo conj |
| 21 | **123515** | 2 | Hub | moyeu | Nabe | cubo | cubo |
| 22 | †**123517** | 2 | Ring | anneau | Ring | anel | anillo |
| 23 | **123789** | 2 | Shaft | arbre | Welle | ávore | árbol |
| 24 | **124325** | 2 | Seal | joint étanchéité | Dichtung | vedador | sello |
| 25 | [4]†**127109** | 2 | Hub&cup assy | ens moyeu&coupelle | Nabe&Schale vollst | conj cubo&copo | conj cubo&cubeta |
| 26 | **2106473** | 1 | Housing | botier | Gehuse | carcaça | carcasa |
| 27 | **19F000012** | 1 | Bushing | chemise | Buchse | bucha | buje |
| 28 | **672004** | 2 | Cup | cuvette | Schale | capa | cubeta |
| 29 | **672005** | 2 | Cone | cône | Kegel | cone | cono |
| 30 | **742262** | 2 | Cup | cuvette | Schale | capa | cubeta |
| 31 | **742263** | 2 | Cone | cône | Kegel | cone | cono |
| 32 | **955743** | 1 | Breather assy | souffleur | Entlüftereinheit | conj de respirador | conj respirador |
| 33 | **1900649** | 20 | Nut | écrou | Mutter | porca | tuerca |
| 34 | **1C0000720** | 12 | Capscrew | vis àtête | Kopfschraube | parafuso de cabeça | tornilla de presió |
| 35 | **2C0000820** | 24 | Screw | vis | Schraube | parafuso | tornillo |
| 36 | †**6C0000605** | 2 | Screw | vis | Schraube | parafuso | tornillo |
| 37 | **16F000012** | 3 | Plug | bouchon | Stopfen | bujão | tapón |
| 38 | **64D000007** | 14 | Nut | écrou | Mutter | porca | tuerca |
| 39 | ○--------- | 1 | Diff&Carr assy | ens dif porte-plan | Diff&Träger voll | conj difer&sup | conj difer&sop |
| 40 | [5]--------- | 1 | Hub&Cup Assy | ens moyeu&coupelle | Nabe&Schale vollst | conj cubo&copo | conj cubo&cubeta |
| 41 | ○--------- | 1 | Planet carr assy | port planétaire ens | Planetentraeger voll | sup planet conj | sop planet conj |
| 42 | **117336** | 20 | Stud | goujon | Stift | prisioneiro | espárrago |
| 43 | **104412** | 20 | Washer | rondelle | Scheibe | arruela | arandela |
| 44 | **106998** | 20 | Nut | écrou | Mutter | porca | tuerca |
| 45 | **128117** | 2 | Seal | joint étanchéité | Dichtung | vedador | sello |
| 46 | **2107398** | 2 | Seal | joint étanchéité | Dichtung | vedador | sello |
| 47 | **816098** | 2 | Spindle kit | ensemble fusée | Spindel vollst | jôgo de haste | juego de huso |

[1] Inc 28 & 30

[2] Inc 4

[3] Inc 12, 21 & 35

[4] Inc 28, 40, 30, 15, 17

[5] Ref 26

[6] Inc 27,42➡47

666GMGR 515A-101-CAC➡515A-630-CAC

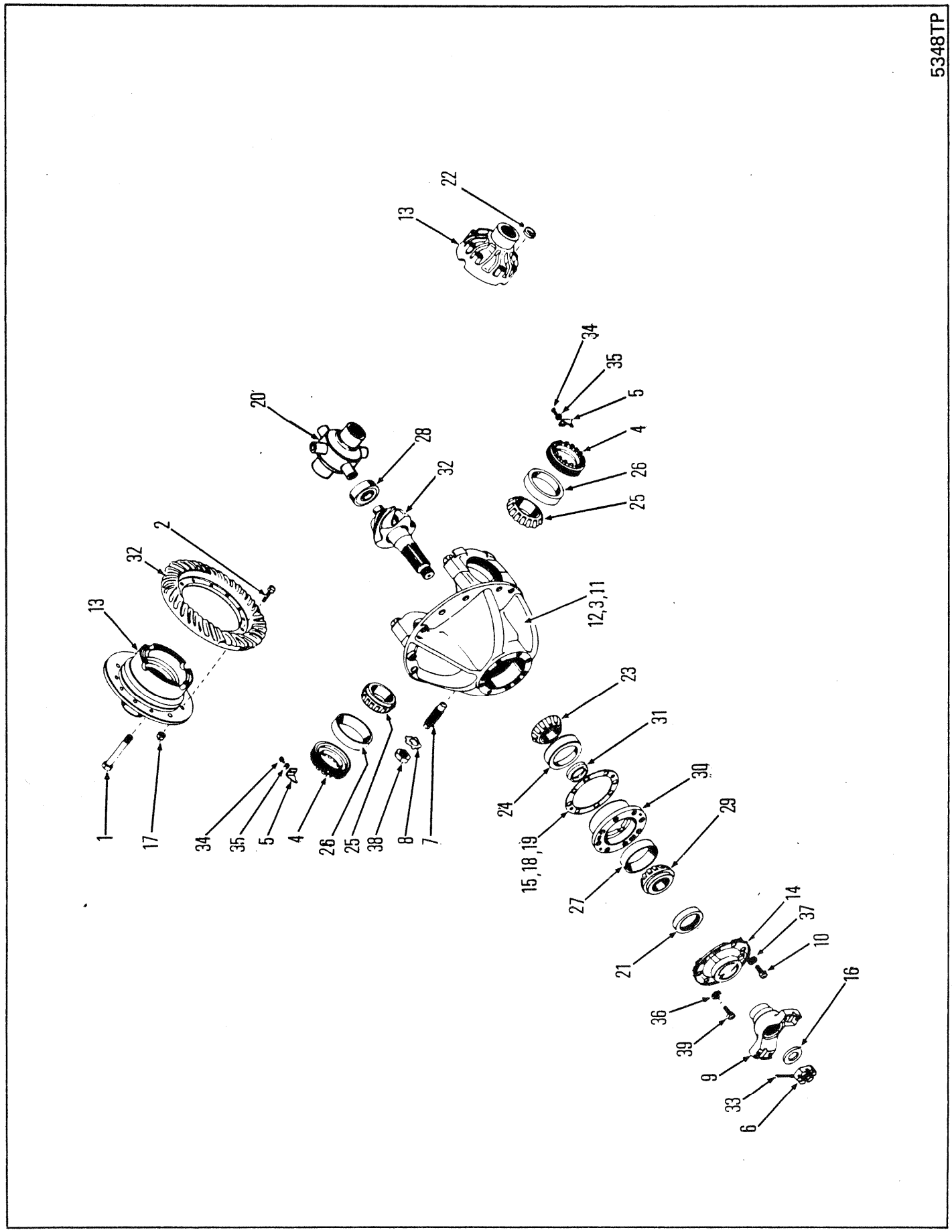
5348TP
1
17
34
35
5
4
26
25
38
8
7
15,18,19
24
23
31
30
29
27
21
14
37
10
16
36
39
9
33
6
12,3,11
13
32
2
20
28
32
34
35
5
4
26
25
13
22

# DIFFERENTIAL & CARRIER ASSEMBLY, REAR RD-17600
# ENSEMBLE DIFFÉRENTIAL-PALIER ET COUSSINENT, ARRIÈRE RD-17600
# DIFFERENTIAL & TRÄGER VOLLSTÄNDIG, HINTEN RD-17600
# CONJUNTO DO DIFFERENCIAL & SUPORTE, TRASEIRA RD-17600
# CONJUNTO DE DIFERENCIAL & SOPORTE, TRASERO RD-17600

| No. | Part No. | Qty | Description | Description | Benennung | Descrição | Descripción |
|---|---|---|---|---|---|---|---|
| A | [1]127992 | 1 | Diff&carr assy | ens dif&porte-plan | Diff&Trger voll | conj difer&sup | conj difer&sop |
| B | [2]124997 | 1 | Diff assy | différential ens | Differential voll | diferencial cj | diferencial cj |
| C | [3]124435 | 1 | Diff body | corps de diff | Differentialkrper | corpo do dif | cuerpo diferenc |
| 1 | 17C000856 | 12 | Bolt | boulon | Bolzen | parafuso | bulón |
| 2 | 100176 | 12 | Bolt | boulon | Bolzen | parafuso | bulón |
| 3 | †123830 | 4 | Bolt | boulon | Bolzen | parafuso | bulón |
| 4 | 100940 | 1 | Nut | écrou | Mutter | porca | tuerca |
| 5 | 100941 | 1 | Lock | serrure | Schloss | fechadura | cerradura |
| 6 | 100950 | 1 | Nut | écrou | Mutter | porca | tuerca |
| 7 | 100953 | 1 | Screw | vis | Schraube | parafuso | tornillo |
| 8 | 100954 | 1 | Lock | serrure | Schloss | fechadura | cerradura |
| 9 | 106081 | 1 | Flange | bride | Flansch | flange | brida |
| 10 | 17C000928 | 5 | Bolt | boulon | Bolzen | parafuso | bulón |
| 11 | †111656 | 4 | Washer | rondelle | Scheibe | arruela | arandela |
| 12 | 112279 | 1 | Cap&carrier | bouchon&porteur | Träger &Verschluss | cobert&veiculo | caopota&transportdor |
| 13 | [4]126894 | 1 | Diff case kit | trsse corps differ | Diffgehäuse bausatz | jogo carcaca dif | juego carcasa dif |
| 14 | 112352 | 1 | Retainer | arrêtoir | Halterung | retentor | retén |
| 15 | [5]‡112354 | - | Shim .004 | cale-0,10MM | Beilage-0,10MM | calço-0,10MM | planchita-0,10MM |
| 16 | 119298 | 1 | Washer | rondelle | Scheibe | arruela | arandela |
| 17 | 86D000008 | 12 | Nut | écrou | Mutter | porca | tuerca |
| 18 | ‡125576 | - | Shim .007 | cale-0,18MM | Beilage-0,18MM | calço-0,18MM | planchita-0,18MM |
| 19 | ‡125577 | - | Shim .010 | cale-0,25MM | Beilage-0,25MM | calço-0,25MM | planchita-0,25MM |
| 20 | 125600 | 1 | No-spin unit | ens anti-patinage | No-spin Anlage | conj anti-patinante | conj anti-patinaje |
| 21 | 127989 | 1 | Seal | joint étanchéité | Dichtung | vedador | sello |
| 22 | 106762 | 12 | Washer | rondelle | Scheibe | arruela | arandela |
| 23 | 667277 | 1 | Cone | cône | Kegel | cone | cono |
| 24 | 667278 | 1 | Cup | cuvette | Schale | capa | cubeta |
| 25 | 675248 | 1 | Cone | cône | Kegel | cone | cono |
| 26 | 675249 | 1 | Cup | cuvette | Schale | capa | cubeta |
| 27 | 675257 | 1 | Cup | cuvette | Schale | capa | cubeta |
| 28 | 675536 | 1 | Bearing | palier | Lager | mancal | cojinete |
| 29 | 710288 | 1 | Cone | cône | Kegel | cone | cono |
| 30 | 112350 | 1 | Pinion brg cage | cage roul de pign | Ritzellagerkäfig | grade rol pinhão | jaula coj piñon |
| 31 | 815040 | 1 | Spacer | entretoise | Distanzteil | espaçador | espaciador |
| 32 | 815202 | 1 | Gear & pin set | ens cour dentée goup | Tellerrad & Ritzlstz | jogo coroa & pinhão | jg corona & pasador |
| 33 | 1F0000428 | 1 | Pin | goupille | Stift | pino | pasador |
| 34 | 3C0000614 | 1 | Bolt | boulon | Bolzen | parafuso | bulón |
| 35 | 4E0000006 | 1 | Lockwasher | rondelle frein | Sicherungsscheibe | arruela de pressão | arandela seguridad |
| 36 | 4E0000008 | 1 | Lockwasher | rondelle frein | Sicherungsscheibe | arruela de pressão | arandela seguridad |
| 37 | 4E0000009 | 5 | Lockwasher | rondelle frein | Sicherungsscheibe | arruela de pressão | arandela seguridad |
| 38 | 8D0000014 | 1 | Nut | écrou | Mutter | porca | tuerca |
| 39 | 17C000828 | 1 | Bolt | boulon | Bolzen | parafuso | bulón |

[1] Inc 1➟39

[2] Inc 1, 2, 17

[3] Inc 1

[4] Inc 1 & 17

[5] Quantity two (2) needed when ordering one (1) 112354 Shim[5] Quantité (2) lors de la commande de (1) cale 112354
[5] Menge (2) bei Bestellung von (1) Beilag 112354
[5] Quantidade (2) pedir quando necessitar (1) Calço no. 112354
[5] Cantidad Se necesitan (2) cuando se ordena (1) Planchita 112354

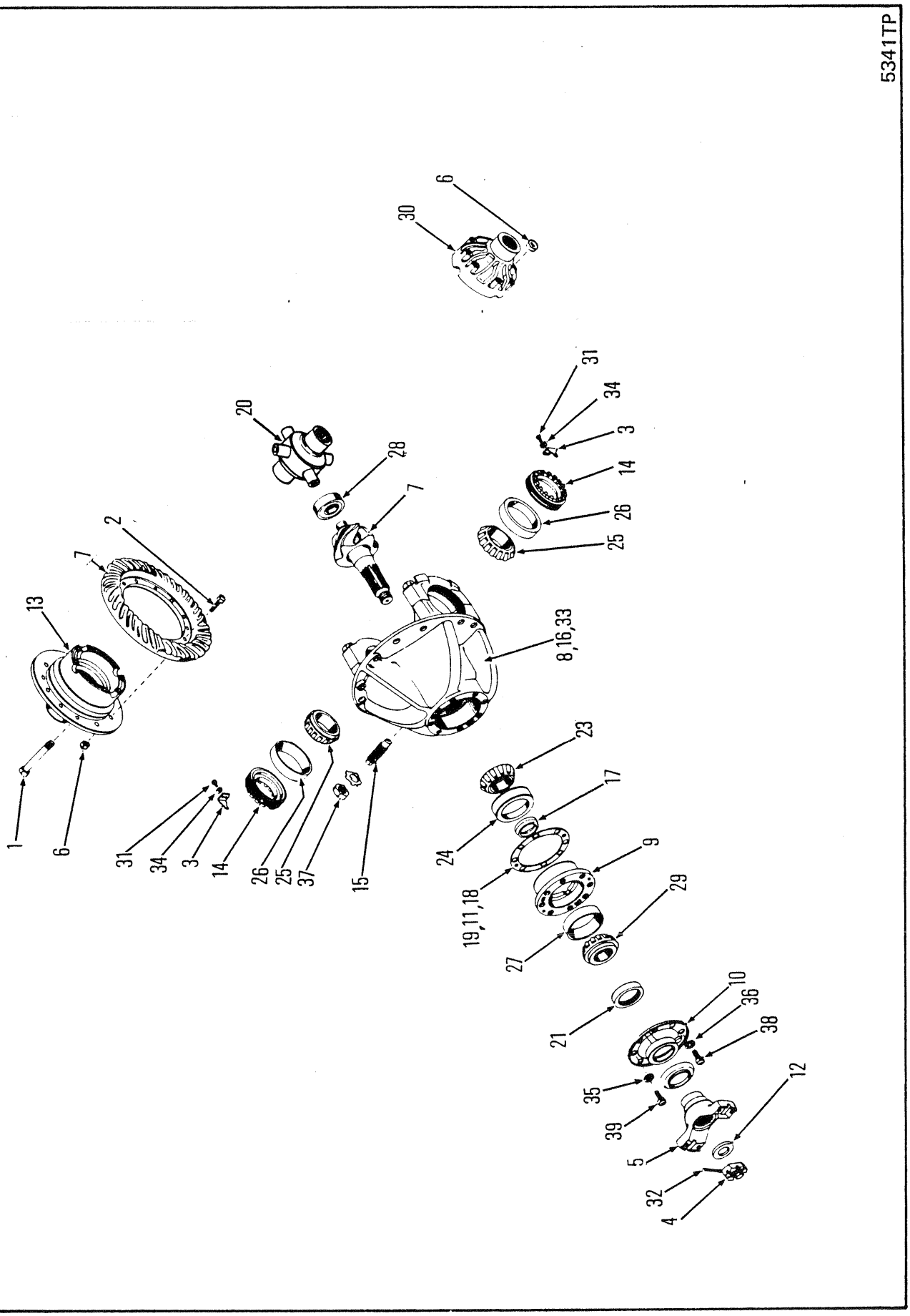
5341TP
6
30
31
34
3
14
26
25
20
28
7
2
7
13
8,16,33
1
6
31
34
3
14
26
25
37
15
23
17
24
9
19,11,18
29
27
21
10
36
38
35
39
12
5
32
4

# DIFFERENTIAL & CARRIER ASSEMBLY, REAR RD-17800&17900
# ENSEMBLE DIFFÉRENTIAL-PALIER ET COUSSINENT, ARRIÈRE RD-17800&17900
# DIFFERENTIAL & TRÄGER VOLLSTÄNDIG, HINTEN RD-17800&17900
# CONJUNTO DO DIFERENCIAL & SUPORTE, TRASEIRA RD-17800&17900
# CONJUNTO DE DIFERENCIAL & SOPORTE, TRASERO RD-17800&17900

| No. | Part No. | Qty | Description | Description | Benennung | Descrição | Descripción |
|---|---|---|---|---|---|---|---|
| A | [6]127995 | 1 | Diff&carr assy | ens dif&porte-plan | Diff&Trger voll | conj difer&sup | conj difer&sop |
| B | [2]124439 | 1 | Diff assy | différential ens | Differential voll | diferencial cj | diferencial cj |
| C | [3]124435 | 1 | Diff body | corps de diff | Differentialkrper | corpo do dif | cuerpo diferenc |
| D | [5]126894 | 1 | Diff case assy | boitier differential ens | Differentialgehäuse voll | dif carcaça cj | dif carcasa cj |
| 1 | 17C000856 | 8 | Bolt | boulon | Bolzen | parafuso | bulón |
| 2 | 100176 | 12 | Bolt | boulon | Bolzen | parafuso | bulón |
| 3 | 100941 | 2 | Lock | serrure | Schloss | fechadura | cerradura |
| 4 | 100950 | 1 | Nut | écrou | Mutter | porca | tuerca |
| 5 | 106081 | 1 | Flange | bride | Flansch | flange | brida |
| 6 | 18D000008 | 12 | Nut | écrou | Mutter | porca | tuerca |
| 7 | 110127 | 1 | Ring gear set | ens cour dentée | Zahnkranzsatz | jôgo corõa | juego corona |
| 8 | 112279 | 1 | Cap&carrier | bouchon&porteur | Träger &Verschluss | cobert&veiculo | caopota&transportdor |
| 9 | [1]112351 | 1 | Pinion brg cage | cage roul de pign | Ritzellagerkäfig | grade rol pinhão | jaula coj piñon |
| 10 | [1]112352 | 1 | Retainer | arrêtoir | Halterung | retentor | retén |
| 11 | [7]‡112354 | - | Shim .004 | cale-0,10MM | Beilage-0,10MM | calço-0,10MM | planchita-0,10MM |
| 12 | 119298 | 1 | Washer | rondelle | Scheibe | arruela | arandela |
| 13 | [4]§------ | 1 | Flange half | demi-flasque | Flanschhlfte | meia flange | media brida |
| 14 | 122765 | 2 | Nut | écrou | Mutter | porca | tuerca |
| 15 | 123800 | 1 | Screw | vis | Schraube | parafuso | tornillo |
| 16 | †123830 | 4 | Bolt | boulon | Bolzen | parafuso | bulón |
| 17 | 124040 | 1 | Spacer | entretoise | Distanzteil | espaçador | espaciador |
| 18 | ‡125576 | - | Shim .007 | cale-0,18MM | Beilage-0,18MM | calço-0,18MM | planchita-0,18MM |
| 19 | ‡125577 | - | Shim .010 | cale-0,25MM | Beilage-0,25MM | calço-0,25MM | planchita-0,25MM |
| 20 | 125600 | 1 | No-spin unit | ens anti-patinage | No-spin Anlage | conj anti-patinante | conj anti-patinaje |
| 21 | 127989 | 1 | Seal | joint étanchéité | Dichtung | vedador | sello |
| 22 | 106762 | 8 | Washer | rondelle | Scheibe | arruela | arandela |
| 23 | 667277 | 1 | Cone | cône | Kegel | cone | cono |
| 24 | 667278 | 1 | Cup | cuvette | Schale | capa | cubeta |
| 25 | 675248 | 2 | Cone | cône | Kegel | cone | cono |

[1] Loctite 277 is used as a sealant on the inside surfaces of items 9 & 10
[1] Loctite 277 est utilisé pour sceller les surfaces intérieures des articles 9 et 10
[1] Loctite 277 wird als Dichtmittel an der Innenfläche der Pos. 9 & 10
[1] Usar Loctite 277 par evitar afrouxamento na superficie interna dos itens 9 e 10
[1] Loctite 277 es usado como sellador de las superficies interiores de los articulos 9 & 10

[2] Inc C, 1, 2, & 20

[3] Inc 1, 13, 20 & 30

[4] See D
[4] Voir D
[4] Siehe D
[4] Veja D
[4] Véase D

[5] Inc B, C, D, & 1

[6] No longer available
[6] N'est plus disponible
[6] Nucht mehr erhältlich
[6] Não está mais disponível
[6] No se produce más

[7] Quantity two (2) needed when ordering one (1) 112354 Shim
[7] Quantité (2) lors de la commande de (1) cale 112354
[7] Menge (2) bei Bestellung von (1) Beilag 112354
[7] Quantidade (2) pedir quando necessitar (1) Calço no. 112354
[7] Cantidad Se necesitan (2) cuando se ordena (1) Planchita 112354

666CUM 500D-101-CAC→500G-9999-CAC
666GM 513E-101-CAC→513G-9999-CAC
666GMGR 515A-101-CAC→515A-630-CAC

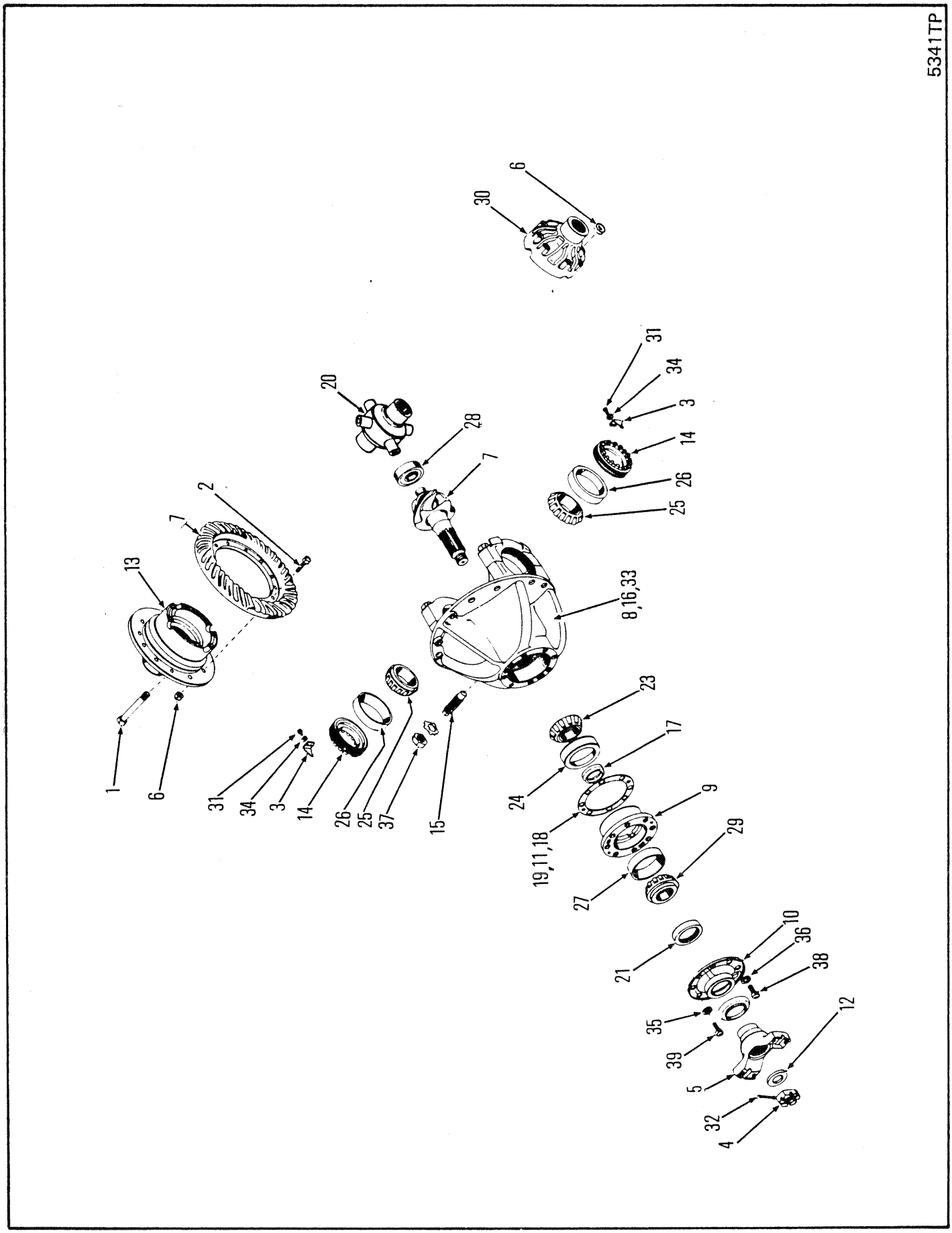
5341TP
1
6
13
7
2
9
31
34
3
20
14
26
25
37
15
20
28
7
8,16,33
30
6
31
34
3
14
26
25
23
17
24
19,11,18
9
29
27
21
10
36
38
35
39
5
12
32
4

# DIFFERENTIAL & CARRIER ASSEMBLY, REAR RD-17800&17900
# ENSEMBLE DIFFÉRENTIAL-PALIER ET COUSSINENT, ARRIÈRE RD-17800&17900
# DIFFERENTIAL & TRÄGER VOLLSTÄNDIG, HINTEN RD-17800&17900
# CONJUNTO DO DIFERENCIAL & SUPORTE, TRASEIRA RD-17800&17900
# CONJUNTO DE DIFERENCIAL & SOPORTE, TRASERO RD-17800&17900

| No. | Part No. | Qty | Description | Description | Benennung | Descrição | Descripción |
|---|---|---|---|---|---|---|---|
| 26 | **675249** | 2 | Bearing cup | coupelle de roul | Lagerschale | copo do rolamento | taza del coj |
| 27 | **675257** | 1 | Bearing cup | coupelle de roul | Lagerschale | copo do rolamento | taza del coj |
| 28 | **675536** | 1 | Bearing | palier | Lager | mancal | cojinete |
| 29 | **710288** | 1 | Bearing cone | cône de roulement | Lagerkegel | cone do rolamento | cono del conj |
| 30 | [4]§------ | 1 | Plain half | môtié lisse | Glatte Hlfte | metada simples | mitad sencilla |
| 31 | **1C000614** | 2 | Bolt | boulon | Bolzen | parafuso | bulón |
| 32 | **1F000428** | 1 | Pin | goupille | Stift | pino | pasador |
| 33 | †**3E000012** | 4 | Lockwasher | rondelle frein | Sicherungsscheibe | arruela de pressão | arandela seguridad |
| 34 | **4E000006** | 2 | Lockwasher | rondelle frein | Sicherungsscheibe | arruela de pressão | arandela seguridad |
| 35 | **4E000008** | 1 | Lockwasher | rondelle frein | Sicherungsscheibe | arruela de pressão | arandela seguridad |
| 36 | **4E000009** | 5 | Lockwasher | rondelle frein | Sicherungsscheibe | arruela de pressão | arandela seguridad |
| 37 | **8D000014** | 1 | Nut | écrou | Mutter | porca | tuerca |
| 38 | **17C000828** | 5 | Bolt | boulon | Bolzen | parafuso | bulón |
| 39 | **17C000928** | 5 | Bolt | boulon | Bolzen | parafuso | bulón |

[1] Loctite 277 is used as a sealant on the inside surfaces of items 9 & 10
[1] Loctite 277 est utilisé pour sceller les surfaces intérieures des articles 9 et 10
[1] Loctite 277 wird als Dichtmittel an der Innenfläche der Pos. 9 & 10
[1] Usar Loctite 277 par evitar afrouxamento na superficie interna dos itens 9 e 10
[1] Loctite 277 es usado como sellador de las superficies interiores de los articulos 9 & 10

[2] Inc C, 1, 2, & 20

[3] Inc 1, 13, 20 & 30

[4] See D
[4] Voir D
[4] Siehe D
[4] Veja D
[4] Véase D

[5] Inc B, C, D, & 1

[6] No longer available
[6] N'est plus disponible
[6] Nucht mehr erhältlich
[6] Não está mais disponível
[6] No se produce más

[7] Quantity two (2) needed when ordering one (1) 112354 Shim
[7] Quantité (2) lors de la commande de (1) cale 112354
[7] Menge (2) bei Bestellung von (1) Beilag 112354
[7] Quantidade (2) pedir quando necessitar (1) Calço no. 112354
[7] Cantidad Se necesitan (2) cuando se ordena (1) Planchita 112354

666CUM 500D-101-CAC→500G-9999-CAC
666GM 513E-101-CAC→513G-9999-CAC
666GMGR 515A-101-CAC→515A-630-CAC

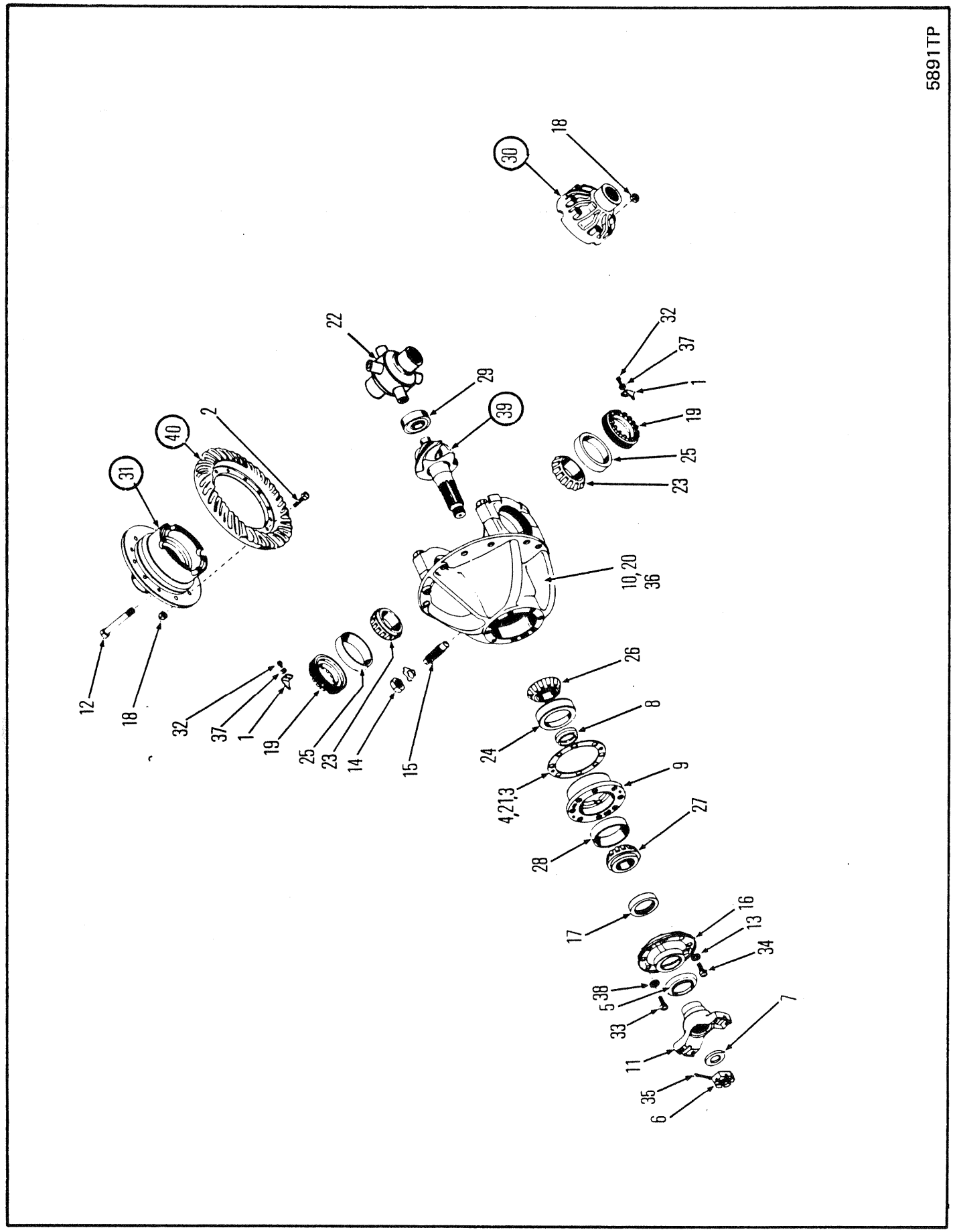
5891TP
30
18
22
29
39
32
37
1
19
25
23
40
2
31
10,20
36
12
18
32
37
1
19
25
23
14
15
26
24
8
4,21,3
9
28
27
17
16
13
34
38
5
33
11
7
35
6

# DIFFERENTIAL & CARRIER ASSEMBLY, REAR RD-19500⊠
# ENSEMBLE DIFFÉRENTIAL-PALIER ET COUSSINENT, ARRIÈRE RD-19500⊠
# DIFFERENTIAL & TRÄGER VOLLSTÄANDIG, HINTEN RD-19500⊠
# CONJUNTO DO DIFERENCIAL & SUPORTE, TRASEIRA RD-19500⊠
# CONJUNTO DE DIFERENCIAL & SOPORTE, TRASERO RD-19500⊠

| No. | Part No. | Qty | Description | Description | Benennung | Descrição | Descripción |
|---|---|---|---|---|---|---|---|
| A | [1]122802 | 1 | Diff&carr assy | ens dif&porte-plan | Diff&Trger voll | conj difer&sup | conj difer&sop |
| B | [3]118704 | 1 | Diff body | corps de diff | Differentialkrper | corpo do dif | cuerpo diferenc |
| C | [2]118719 | 1 | Diff assy | différential ens | Differential voll | diferencial cj | diferencial cj |
| D | [7]815195 | 1 | Gear&pin set | pignon-couronne jeu | Zahnrad&Ritzelsatz | corôa-pinhão jôgo | corona-piñón juego |
| E | [4]815769 | 1 | Diff case | boitier differentiel | Differentialgehäuse | diferencial carcaça | diferencial carcasa |
| 1 | 100941 | 2 | Lock | serrure | Schloss | fechadura | cerradura |
| 2 | 101196 | 12 | Bolt | boulon | Bolzen | parafuso | bulón |
| 3 | ‡101257 | - | Shim .004 | cale-0,10MM | Beilage-0,10MM | calço-0,10MM | planchita-0,10MM |
| 4 | ‡101259 | - | Shim .010 | cale-0,25MM | Beilage-0,25MM | calço-0,25MM | planchita-0,25MM |
| 5 | 101261 | 1 | Shield | protecteur | Schutzschild | protetor | protector |
| 6 | 101262 | 1 | Nut | écrou | Mutter | porca | tuerca |
| 7 | 101263 | 1 | Washer | rondelle | Scheibe | arruela | arandela |
| 8 | 104226 | 1 | Spacer | entretoise | Distanzteil | espaçador | espaciador |
| 9 | [5]110843 | 1 | Pinion | pignon | Ritzel | pinhão | pion |
| 10 | 112289 | 1 | Cap&carr assy | ens bouchon&porteur | Träger&Verschluss | cj de cobert&veiculo | cj capota&transportdr |
| 11 | 117218 | 1 | Flange | bride | Flansch | flange | brida |
| 12 | 118475 | 8 | Bolt | boulon | Bolzen | parafuso | bulón |
| 13 | 4E0000009 | 7 | Washer | rondelle | Scheibe | arruela | arandela |
| 14 | 8D0000018 | 1 | Nut | écrou | Mutter | porca | tuerca |
| 15 | 121241 | 1 | Screw | vis | Schraube | parafuso | tornillo |
| 16 | [5]122732 | 2 | Gasket | garniture | Dichtung | gaxeta | empaquetadura |
| 17 | 122740 | 1 | Seal | joint étanchéité | Dichtung | vedador | sello |
| 18 | [1]122802 | 1 | Diff&carr assy | ens dif&porte-plan | Diff&Trger voll | conj difer&sup | conj difer&sop |
| 19 | 123747 | 2 | Nut | écrou | Mutter | porca | tuerca |
| 20 | 123831 | 4 | Bolt | boulon | Bolzen | parafuso | bulón |
| 21 | ‡125567 | - | Shim .007 | cale-0,18MM | Beilage-0,18MM | calço-0,18MM | planchita-0,18MM |
| 22 | 128222 | 1 | No-spin unit | ens anti-patinage | No-spin Anlage | conj anti-patinante | conj anti-patinaje |
| 23 | 654144 | 2 | Cone | cône | Kegel | cone | cono |
| 24 | 658988 | 1 | Cup | cuvette | Schale | capa | cubeta |
| 25 | 667275 | 2 | Cup | cuvette | Schale | capa | cubeta |
| 26 | 667276 | 1 | Cone | cône | Kegel | cone | cono |
| 27 | 667277 | 1 | Cone | cône | Kegel | cone | cono |
| 28 | 667278 | 1 | Cup | cuvette | Schale | capa | cubeta |
| 29 | 667466 | 1 | Bearing | palier | Lager | mancal | cojinete |
| 30 | [6]§------- | 1 | Flange half | demi-flasque | Flanschhlfte | meia flange | media brida |
| 31 | [6]§------- | 1 | Plain half | môtié lisse | Glatte Hlfte | metada simples | mitad sencilla |
| 32 | 1C0000614 | 2 | Bolt | boulon | Bolzen | parafuso | bulón |
| 33 | 1C0000836 | 1 | Bolt | boulon | Bolzen | parafuso | bulón |
| 34 | 1C0000936 | 7 | Bolt | boulon | Bolzen | parafuso | bulón |
| 35 | 1F0000732 | 1 | Pin | goupille | Stift | pino | pasador |
| 36 | 3E0000014 | 4 | Washer | rondelle | Scheibe | arruela | arandela |
| 37 | 4E0000006 | 2 | Lockwasher | rondelle frein | Sicherungsscheibe | arruela de pressão | arandela seguridad |
| 38 | 4E0000008 | 1 | Lockwasher | rondelle frein | Sicherungsscheibe | arruela de pressão | arandela seguridad |
| 39 | --------- | 1 | Ring gear | couronne dentée | Zahnkranz | corôa | corona |
| 40 | -------- | 1 | Pinion | pignon | Ritzel | pinhão | pion |

[1] Inc B,C,D,E, & 1➡40

[2] Inc 2,18, 30 & 31

[3] Inc 18 & 31

[4] Inc 12, 18, 30 & 31

[5] Loctite 277 is used as a sealant on the inside surfaces of items 9 & 16
[5] Loctite 277 est utilisé pour sceller les surfaces intérieures des articles 9 et 16
[5] Loctite 277 wird als Dichtmittel an der Innenfläche der Pos. 9 & 16
[5] Usar Loctite 277 par evitar afrouxamento na superficie interna dos itens 9 e 16
[5] Loctite 277 es usado como sellador de las superficies interiores de los articulos 9 & 16

[6] See C & E
[6] Voir C & E
[6] Siehe C & E
[6] Veja C & E
[6] Véase C & E

[7] Inc 39 & 40

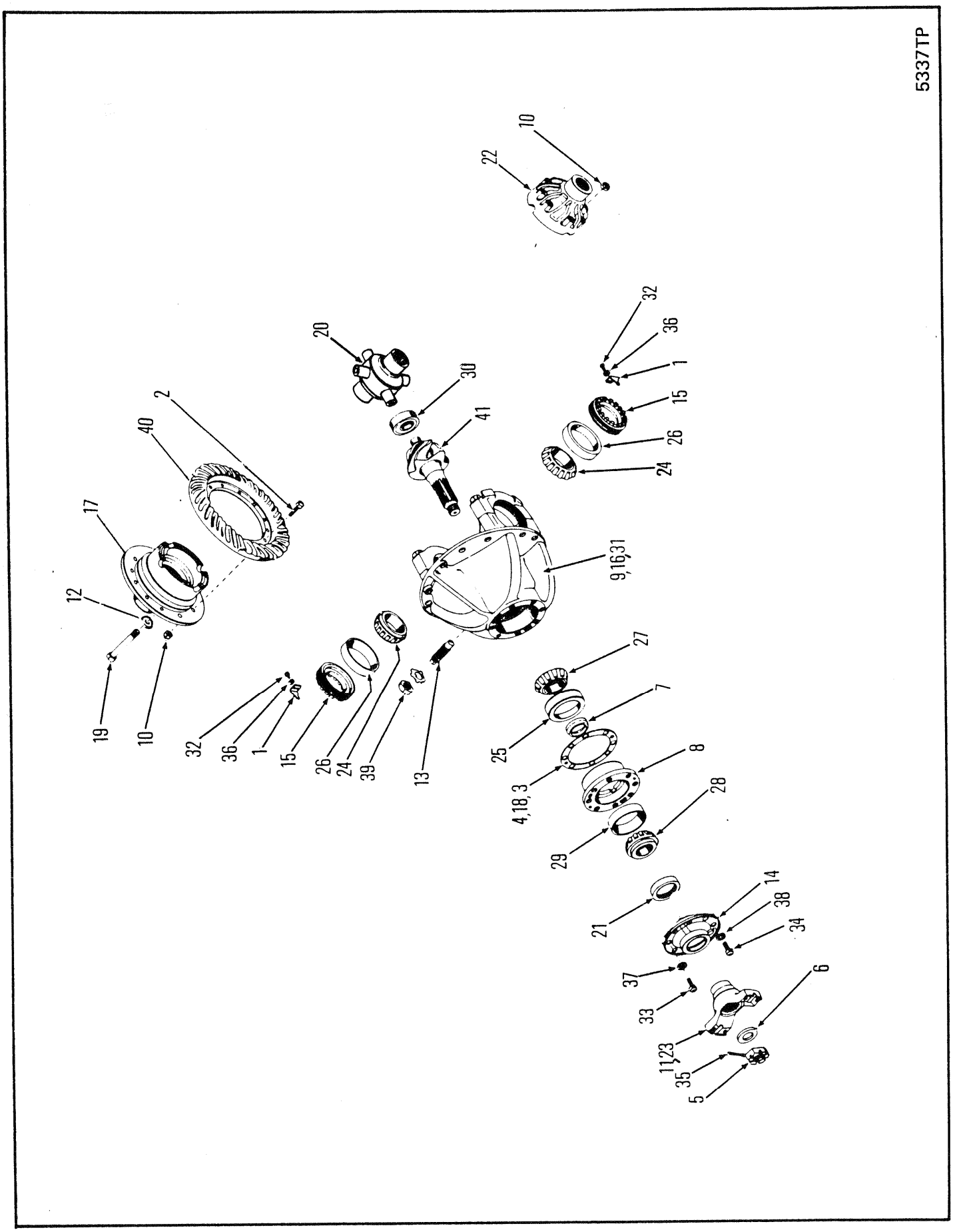
5337TP
10
22
32
36
1
15
26
24
20
30
41
2
40
17
12
19
10
32
36
1
15
26
24
39
13
9,16,31
27
25
7
4,18,3
8
28
29
21
14
38
34
37
33
6
11,23
35
5

# DIFFERENTIAL & CARRIER ASSEMBLY, REAR RD-19640
# ENSEMBLE DIFFÉRENTIAL-PALIER ET COUSSINENT, ARRIÈRE RD-19640
# DIFFERENTIAL & TRÄGER VOLLSTÄNDIG, HINTEN RD-19640
# CONJUNTO DO DIFERENCIAL & SUPORTE, TRASEIRA RD-19640
# CONJUNTO DE DIFERENCIAL & SOPORTE, TRASERO RD-19640

| No. | Part No. | Qty | Description | Description | Benennung | Descrição | Descripción |
|---|---|---|---|---|---|---|---|
| A | [1]128628 | 1 | Diff & Carr Assy | ens dif&porte-plan | Diff&Trger voll | conj difer&sup | conj difer&sop |
| B | [2]124202 | 1 | Diff assy | différential ens | Differential voll | diferencial cj | diferencial cj |
| C | [3]118704 | 1 | Diff body | corps de diff | Differentialkrper | corpo do dif | cuerpo diferenc |
| D | [4]116729 | 1 | Gear&pin set | pignon-couronne jeu | Zahnrad&Ritzelsatz | corôa-pinhão jôgo | corona-piñón juego |
| E | [5]815769 | 1 | Diff case | boitier differentiel | Differentialgehäuse | diferencial carcaça | diferencial carcasa |
| 1 | 100941 | 1 | Lock | serrure | Schloss | fechadura | cerradura |
| 2 | 101196 | 12 | Bolt | boulon | Bolzen | parafuso | bulón |
| 3 | ‡125568 | - | Shim .010 | cale-0,25MM | Beilage-0,25MM | calço-0,25MM | planchita-0,25MM |
| 4 | ‡101257 | - | Shim .004 | cale-0,10MM | Beilage-0,10MM | calço-0,10MM | planchita-0,10MM |
| 5 | 101262 | 1 | Nut | écrou | Mutter | porca | tuerca |
| 6 | 101263 | 1 | Washer | rondelle | Scheibe | arruela | arandela |
| 7 | 815172 | 1 | Spacer Kit | entretoises jeu | Distanzteil Satz | espaçador jógo | espaciador jgo |
| 8 | 110844 | 1 | Cage | cage | Käfig | grade | jaula |
| 9 | 112289 | 1 | Cap&carr assy | ens bouchon&porteur | Träger&Verschluss | cj de cobert&veiculo | cj capota&transportdr |
| 10 | 86D000009 | 20 | Nut | écrou | Mutter | porca | tuerca |
| 11 | 117218 | 1 | Flange | bride | Flansch | flange | brida |
| 12 | 106547 | 16 | Washer | rondelle | Scheibe | arruela | arandela |
| 13 | 121241 | 1 | Screw | vis | Schraube | parafuso | tornillo |
| 14 | 122732 | 1 | Retainer | arrêtoir | Halterung | retentor | retén |
| 15 | 123747 | 1 | Nut | écrou | Mutter | porca | tuerca |
| 16 | †123831 | 4 | Bolt | boulon | Bolzen | parafuso | bulón |
| 17 | §------ | 1 | Flange half | demi-flasque | Flanschhlfte | meia flange | media brida |
| 18 | ‡125567 | - | Shim .007 | cale-0,18MM | Beilage-0,18MM | calço-0,18MM | planchita-0,18MM |
| 19 | 126624 | 8 | Bolt | boulon | Bolzen | parafuso | bulón |
| 20 | 128222 | 1 | No-spin unit | ens anti-patinage | No-spin Anlage | conj anti-patinante | conj anti-patinaje |
| 21 | 128400 | 1 | Seal | joint étanchéité | Dichtung | vedador | sello |
| 22 | §------ | 1 | Plain half | môtié lisse | Glatte Hlfte | metada simples | mitad sencilla |
| 23 | 128789 | 1 | Mudslinger | mudslinger | Spritzlappen | mudslinger | mudslinger |
| 24 | 654144 | 1 | Cone | cône | Kegel | cone | cono |
| 25 | 658988 | 1 | Cup | cuvette | Schale | capa | cubeta |
| 26 | 667275 | 1 | Cup | cuvette | Schale | capa | cubeta |
| 27 | 667276 | 1 | Cone | cône | Kegel | cone | cono |
| 28 | 667277 | 1 | Cone | cône | Kegel | cone | cono |
| 29 | 667278 | 1 | Cup | cuvette | Schale | capa | cubeta |
| 30 | 667466 | 1 | Bearing | palier | Lager | mancal | cojinete |
| 31 | †26E000014 | 4 | Lockwasher | rondelle frein | Sicherungsscheibe | arruela de pressão | arandela seguridad |
| 32 | 1C0000614 | 1 | Bolt | boulon | Bolzen | parafuso | bulón |
| 33 | 1C0000836 | 1 | Bolt | boulon | Bolzen | parafuso | bulón |
| 34 | 1C0000936 | 7 | Bolt | boulon | Bolzen | parafuso | bulón |
| 35 | 1F0000732 | 1 | Pin | goupille | Stift | pino | pasador |
| 36 | 4E0000006 | 1 | Lockwasher | rondelle frein | Sicherungsscheibe | arruela de pressão | arandela seguridad |
| 37 | 4E0000008 | 1 | Lockwasher | rondelle frein | Sicherungsscheibe | arruela de pressão | arandela seguridad |
| 38 | 4E0000009 | 7 | Lockwasher | rondelle frein | Sicherungsscheibe | arruela de pressão | arandela seguridad |
| 39 | 8D0000018 | 1 | Nut | écrou | Mutter | porca | tuerca |
| 40 | §------ | 1 | Gear | engrenage | Zahnrad | engrenagem | engranaje |
| 41 | §------ | 1 | Pinion | pignon | Ritzel | pinhão | pion |

[1] Inc 1➡41☒513E-101-CAC➡513G-9999-CAC, 500E-101-CAC➡500G-9999-CAC

[2] Inc C,D,E,2,10,12,17,19,20,22

[3] Inc E,10,12,17,19,20,22

[4] Inc 40&41

[5] See 10,12,17,19&22
[5] Voir 12, 17, 22 & 31
[5] Siehe 12, 17, 22 & 31
[5] Veja 12, 17, 22 & 31
[5] Véase 12, 17, 22 & 31

| | |
|---|---|
| 666CUM | 500E-101-CAC➡500G-9999-CAC |
| 666GM | 513E-101-CAC➡513G-9999-CAC |
| 666GMGR | 515A-631-CAC➡515A-9999-CAC |

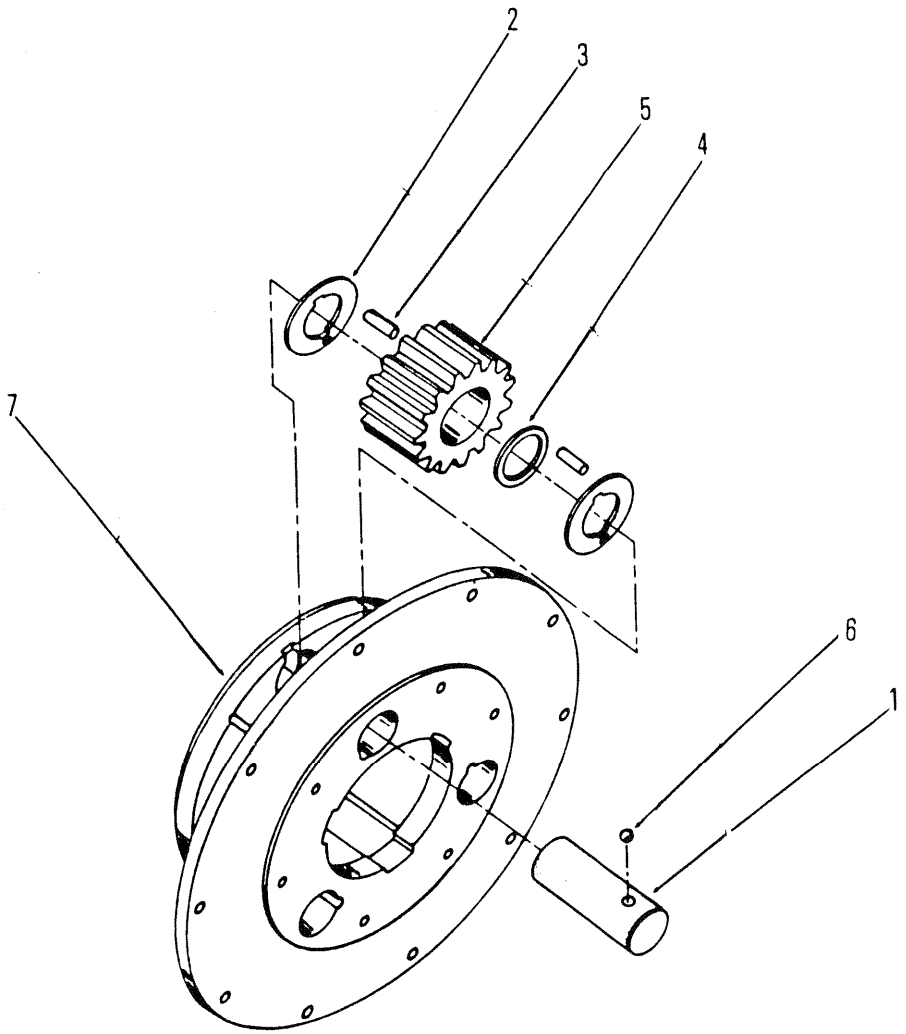


5333TP

# PLANET CARRIER ASSEMBLY FD 17600 & RD 17600
# PORTE PLANÉTAIRE ENSEMBLE FD 17600 & RD 17600
# PLANENTRÄGER VOLLST FD 17600 & RD 17600
# SUPORTE PLANET CONJUNTO FD 17600 & RD 17600
# SOPORTE PLANET CONJUNTO FD 17600 & RD 17600

| No. | Part No. | Qty | Description | Description | Benennung | Descrição | Descripción |
|---|---|---|---|---|---|---|---|
| A | [1]816090 | 1 | Planet carr assy | port planétaire ens | Planetentraeger voll | sup planet conj | sop planet conj |
| 1 | 106349 | 3 | Shaft | arbre | Welle | ávore | árbol |
| 2 | 106350 | 6 | Washer | rondelle | Scheibe | arruela | arandela |
| 3 | 106351 | - | Roller | galet | Rolle | rolete | rodillo |
| 4 | 106352 | 3 | Spacer | entretoise | Distanzteil | espaçador | espaciador |
| 5 | 109088 | 3 | Pinion | pignon | Ritzel | pinhão | pion |
| 6 | 10J000012 | 3 | Ball | bille | Kugel | esfera | bola |
| 7 | 816092 | 1 | Planet carrier | port planétaire | Planeträger | sup planet | sup planet |

[1] Inc 1➞7

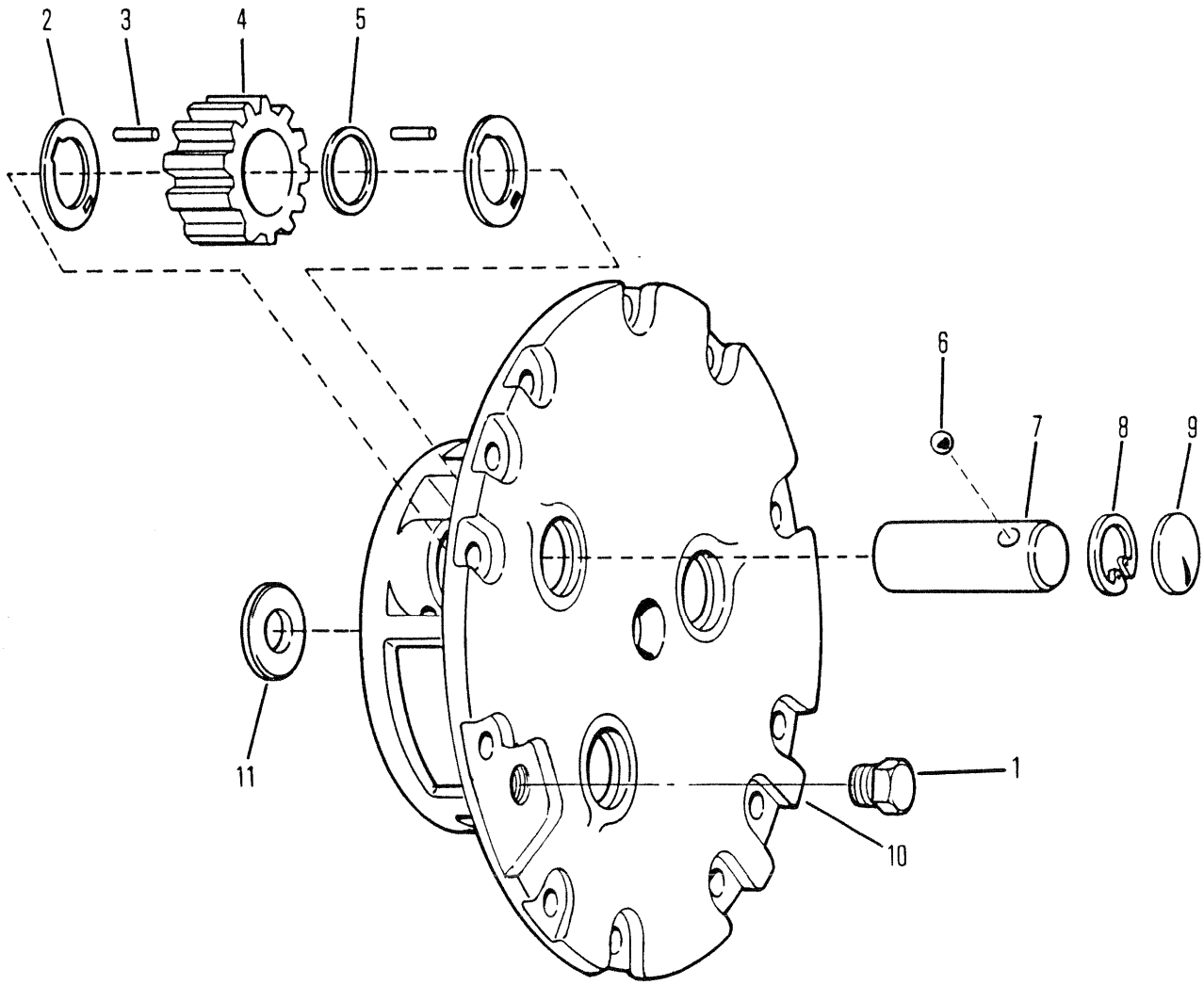


5983TP

# PLANET CARRIER ASSEMBLY-17620 & 17800
# PORTE PLANÉTAIRE ENSEMBLE FD & RD 17620 & 17800
# PLANENTRÄGER VOLLST FD & RD 17620 & 17800
# SUPORTE PLANET CONJUNTO FD & RD 17620 & 17800
# SOPORTE PLANET CONJUNTO FD & RD 17620 & 17800

| No. | Part No. | Qty | Description | Description | Benennung | Descrição | Descripción |
|---|---|---|---|---|---|---|---|
| A | [1,2]127398 | 1 | Planet carr assy | port planétaire ens | Planetentraeger voll | sup planet conj | sop planet conj |
| 1 | 24K000007 | 1 | Plug | bouchon | Stopfen | bujão | tapón |
| 2 | 124574 | 6 | Thrust washer | rondelle pouss | Ritzeldruck | arruela empuxo | arandela empuje |
| 3 | 124576 | 174 | Roller needle | roul à aiguilles | Nadelrolle | rolete agulha | rodillo aguja |
| 4 | 124573 | 3 | Gear | engrenage | Zahnrad | engrenagem | engranaje |
| 5 | 124577 | 3 | Spacer | entretoise | Distanzteil | espaçador | espaciador |
| 6 | 10J000012 | 3 | Lock ball | boule de verrouillage | Sperrkugel | esfera de travamento | bola de sejuridad |
| 7 | 124575 | 3 | Shaft | arbre | Welle | ávore | árbol |
| 8 | 672907 | 3 | Snap ring | circlips | Sperring | anel de trava | anillo de retención |
| 9 | 12F000200 | 3 | Plug | bouchon | Stopfen | bujão | tapón |
| 10 | 127399 | 1 | Planet carrier | port planétaire | Planeträger | sup planet | sup planet |
| 11 | 121166 | 1 | Thrust washer | rondelle pouss | Ritzeldruck | arruela empuxo | arandela empuje |

[1] Inc 1➟11

[2] No longer available. To service complete assembly order 1-2107707. See Group A4 30120.
[2] Plus disponible. Pour l'entretien de l'ensemble, commander 1 pièce 2107707. Voir groupe A4 30120.
[2] Nicht mehr erhältlich. Zur Instandhaltung der vollständigen Einheit, bestelle man 1 Teil 2107707. Siehe Gruppe A4 30120.
[2] Nao disponibilidade. Para o serviço de manutenção do conjunto completo, solicite 1 no. 2107707. Veja o grupo A4 30120.
[2] No se produce más. Para el servicio del conjunto completo ordene 1 no. 2107707. Ver grupo A4 30120.

| | |
|---|---|
| 666CUM | 500D-101-CAC➟500G-9999-CAC |
| 666GM | 513E-101-CAC➟513G-9999-CAC |
| 666GMGR | 515A-101-CAC➟515A-9999-CAC |

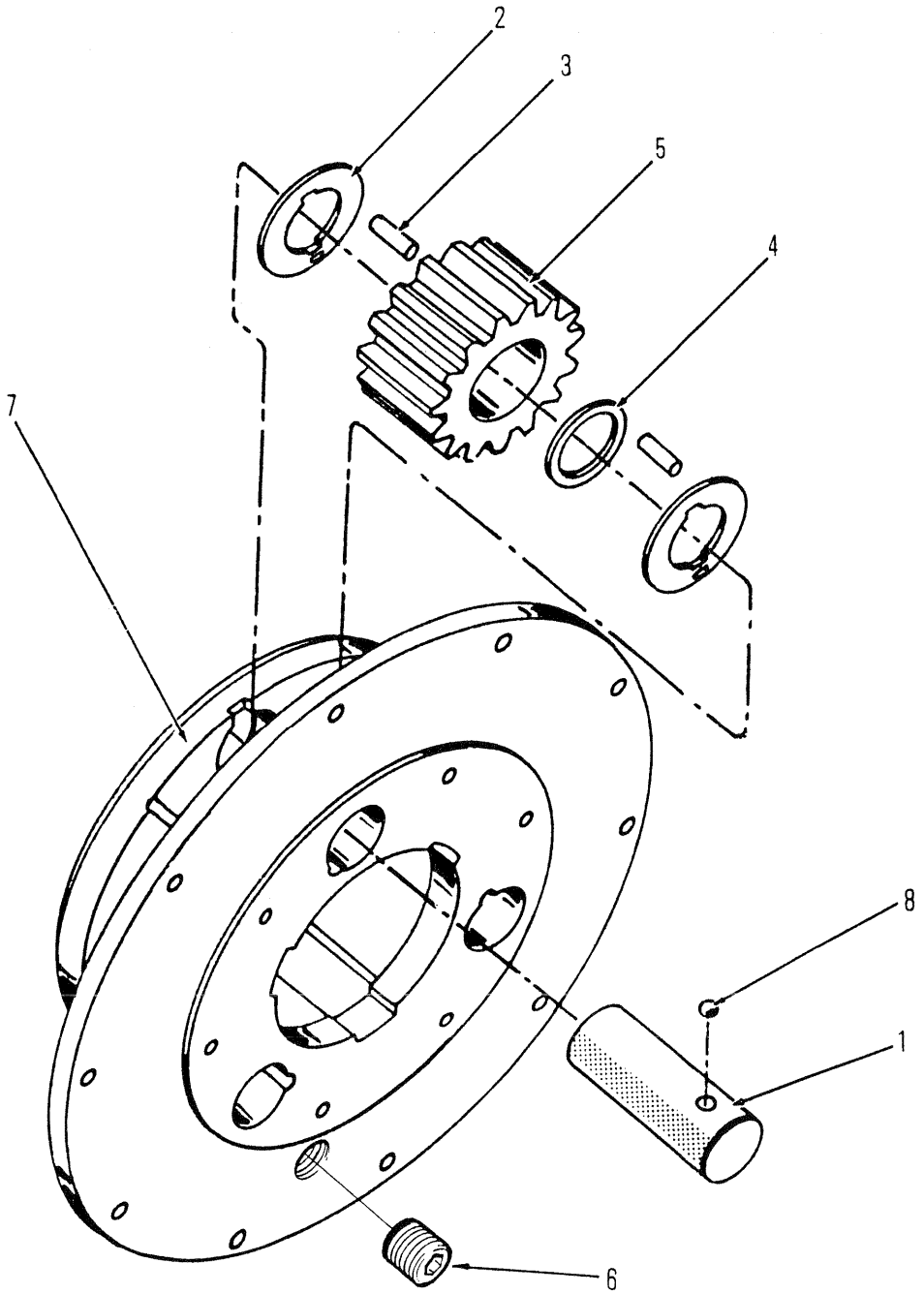


5332TP

# PLANET CARRIER ASSEMBLY 17630, 19600, 19640, 19650 & 33600
# PORTE PLANÉTAIRE ENSEMBLE 17630, 19600, 19640, 19650 & 33600
# PLANENTRÄGER VOLLST 17630, 19600, 19640, 19650 & 33600
# SUPORTE PLANET CONJUNTO 17630, 19600, 19640, 19650 & 33600
# SOPORTE PLANET CONJUNTO, 17630, 19600, 19640, 19650 & 33600

| No. | Part No. | Qty | Description | Description | Benennung | Descrição | Descripción |
|---|---|---|---|---|---|---|---|
| A | [2,1]121632 | 1 | Planet carr assy | port planétaire ens | Planetentraeger voll | sup planet conj | sop planet conj |
| 1 | 106355 | 3 | Shaft | arbre | Welle | ávore | árbol |
| 2 | 106357 | 6 | Thrust washer | rondelle pouss | Ritzeldruck | arruela empuxo | arandela empuje |
| 3 | 106358 | 150 | Roller | galet | Rolle | rolete | rodillo |
| 4 | 106359 | 3 | Spacer | entretoise | Distanzteil | espaçador | espaciador |
| 5 | 116584 | 3 | Pinion | pignon | Ritzel | pinhão | pion |
| 6 | 16F000012 | 1 | Plug | bouchon | Stopfen | bujão | tapón |
| 7 | 121633 | 1 | Carrier | porteur | Trger | suporte | soporte |
| 8 | 10J000012 | 3 | Ball | bille | Kugel | esfera | bola |

[1] Inc. 1➡8

[2] ☒513G-101➡9999-CAC, 500D-101-CAC➡500D-1231-CAC

666CUM 500D-101-CAC➡500D-1231-CAC
666GM 513E-101-CAC➡513G-9999-CAC
666GMGR 515A-101-CAC➡515A-9999-CAC

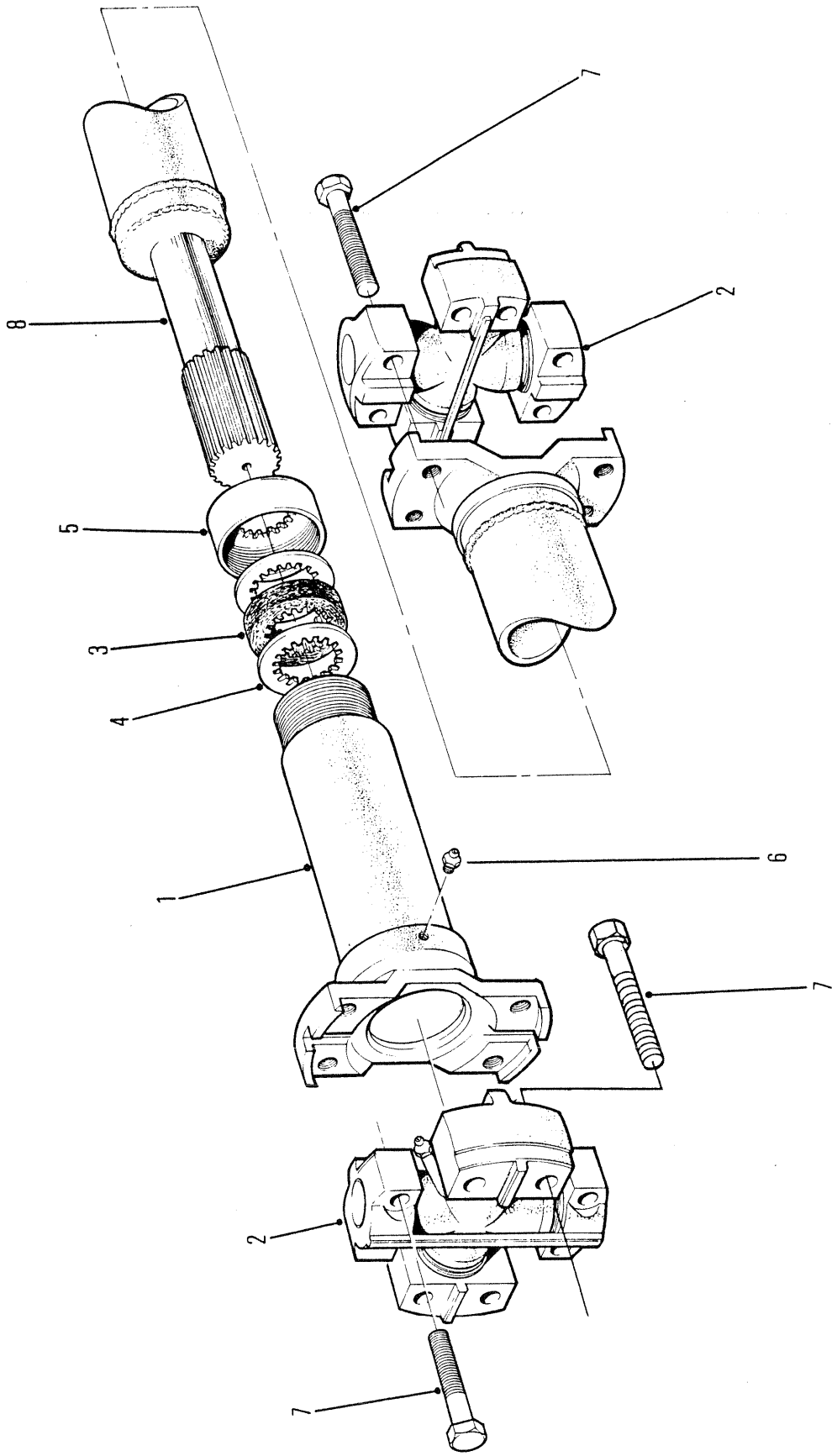
6266TP
7
2
8
5
3
4
1
6
7
2
7

# PROPELLER SHAFT ASSEMBLY, TRANSMISSION/CONVERTER
# ARBRE D'ENTRAÎNEMENT, TRANSMISSION/CONVERTISSEUR, ENSEMBLE
# GELENKWELLE VOLLSTÄNDIG, GETRIEBE/DREHMOMENTWANDLER
# EIXO PROPULSOR, TRANSMISSÃO/CONVERTIDOR, CONJUNTO
# ARBOL PROPULSOR, TRANSMISSIÓN/CONVERTIDOR, CONJUNTO

| No. | Part No. | Qty | Description | Description | Benennung | Descrição | Descripción |
|---|---|---|---|---|---|---|---|
| A | **1911542** | 1 | Prop shaft | arbre de transmission | Antriebswelle | eixo da hélice | eje de propulsión |
| B | [1]**1992260** | 1 | Slip yoke assy | ens chape coulissnte | Gleitjoch vollst | cj bloco corrediào | cj acople telescop |
| 1 | §--------- | 1 | Slip yoke | chape coulissnte | Gleitkupplg | garfo corrediào | acople telescop |
| 2 | **887737** | 2 | Spider assy | ens croisillon | Kreuzgelenk vollst | conj cruzeta | conj cruceta |
| 3 | **940081** | 1 | Seal | joint étanchéité | Dichtung | vedador | sello |
| 4 | **940653** | 2 | Washer | rondelle | Scheibe | arruela | arandela |
| 5 | **940654** | 1 | Retainer | arrêtoir | Halterung | retentor | retén |
| 6 | **10H000025** | 1 | Grease fitting | graisseur | Nippel Schmier | graxeira | grasera |
| 7 | **18C000524** | 16 | Bolt | boulon | Bolzen | parafuso | bulón |
| 8 | **1990172** | 1 | Tube assy | assemblage de tube | Rohreinheit | conjunto de tubos | conjunto del tubo |

[1] Inc 1, 3➟5 & 6

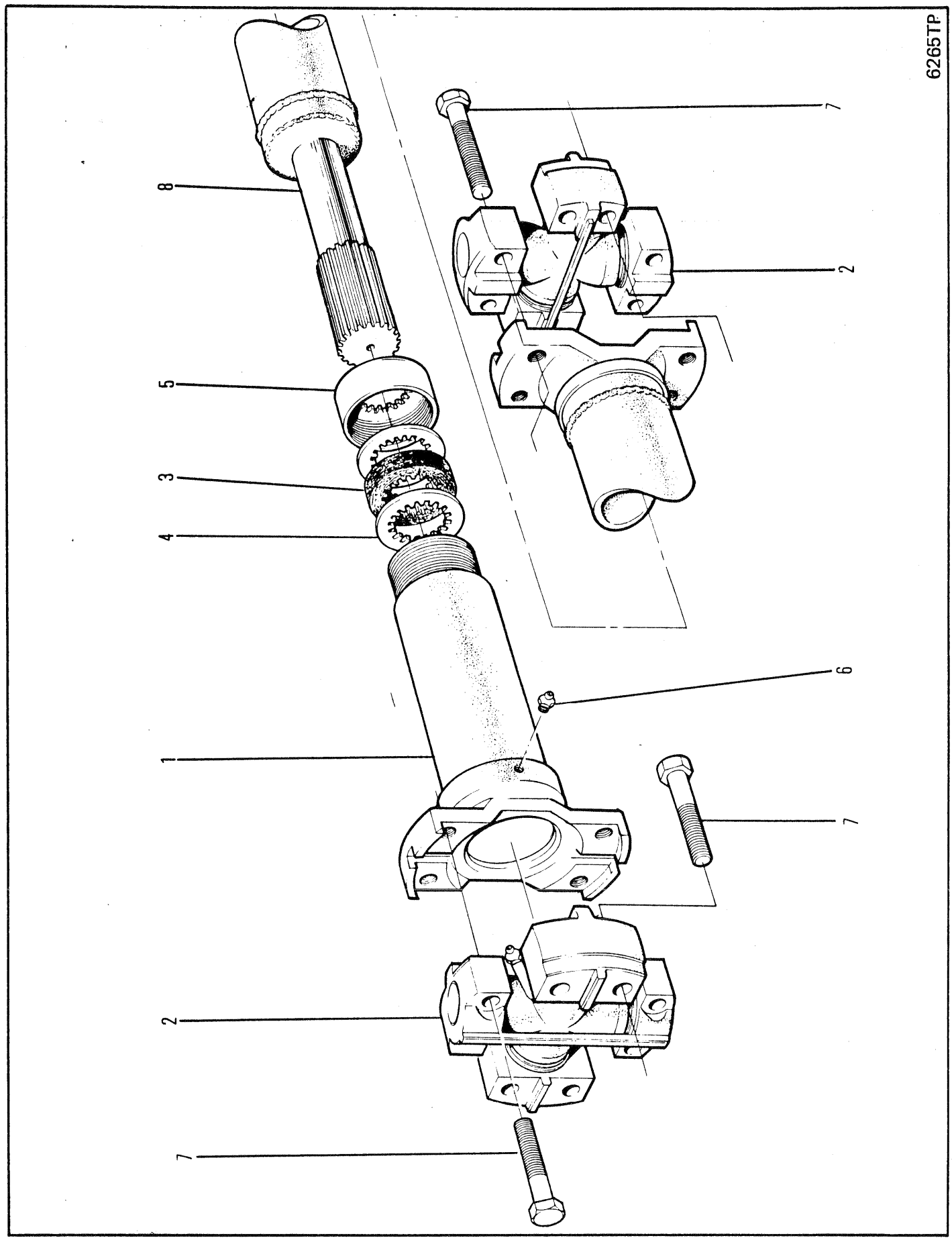
6265TP
8
5
3
4
1
2
7
7
2
6
7
2
7

# PROPELLER SHAFT ASSEMBLY, TRANSMISSION/CONVERTER
# ARBRE D'ENTRAÎNEMENT, TRANSMISSION/CONVERTISSEUR, ENSEMBLE
# GELENKWELLE VOLLSTÄNDIG, GETRIEBE/DREHMOMENTWANDLER
# EIXO PROPULSOR, TRANSMISSÃO/CONVERTIDOR, CONJUNTO
# ARBOL PROPULSOR, TRANSMISSIÓN/CONVERTIDOR, CONJUNTO

| No. | Part No. | Qty | Description | Description | Benennung | Descrição | Descripción |
|---|---|---|---|---|---|---|---|
| A | [1]1900062 | 1 | Prop shaft assy | ens arbre propulsion | Kardanwelle vollst | conj eixo propulsor | conj eje impulsor |
| B | [2]1992260 | 1 | Slip yoke assy | ens chape coulissnte | Gleitjoch vollst | cj bloco corrediào | cj acople telescop |
| 1 | §--------- | 1 | Slip yoke | chape coulissnte | Gleitkupplg | garfo corrediào | acople telescop |
| 2 | 887737 | 2 | Spider assy | ens croisillon | Kreuzgelenk vollst | conj cruzeta | conj cruceta |
| 3 | 940081 | 1 | Seal | joint étanchéité | Dichtung | vedador | sello |
| 4 | 940653 | 2 | Washer | rondelle | Scheibe | arruela | arandela |
| 5 | 940654 | 1 | Retainer | arrêtoir | Halterung | retentor | retén |
| 6 | 10H000025 | 1 | Grease fitting | graisseur | Nippel Schmier | graxeira | grasera |
| 7 | 18C000524 | 16 | Bolt | boulon | Bolzen | parafuso | bulón |
| 8 | 1990172 | 1 | Tube assy | assemblage de tube | Rohreinheit | conjunto de tubos | conjunto del tubo |

[1] Inc 1➟8

[2] Inc 1, 3➟6

666CUM 500D-101-CAC➟500D-9999-CAC
666GM 513E-101-CAC➟513G-9999-CAC
666GMGR 515A-101-CAC➟515A-9999-CAC

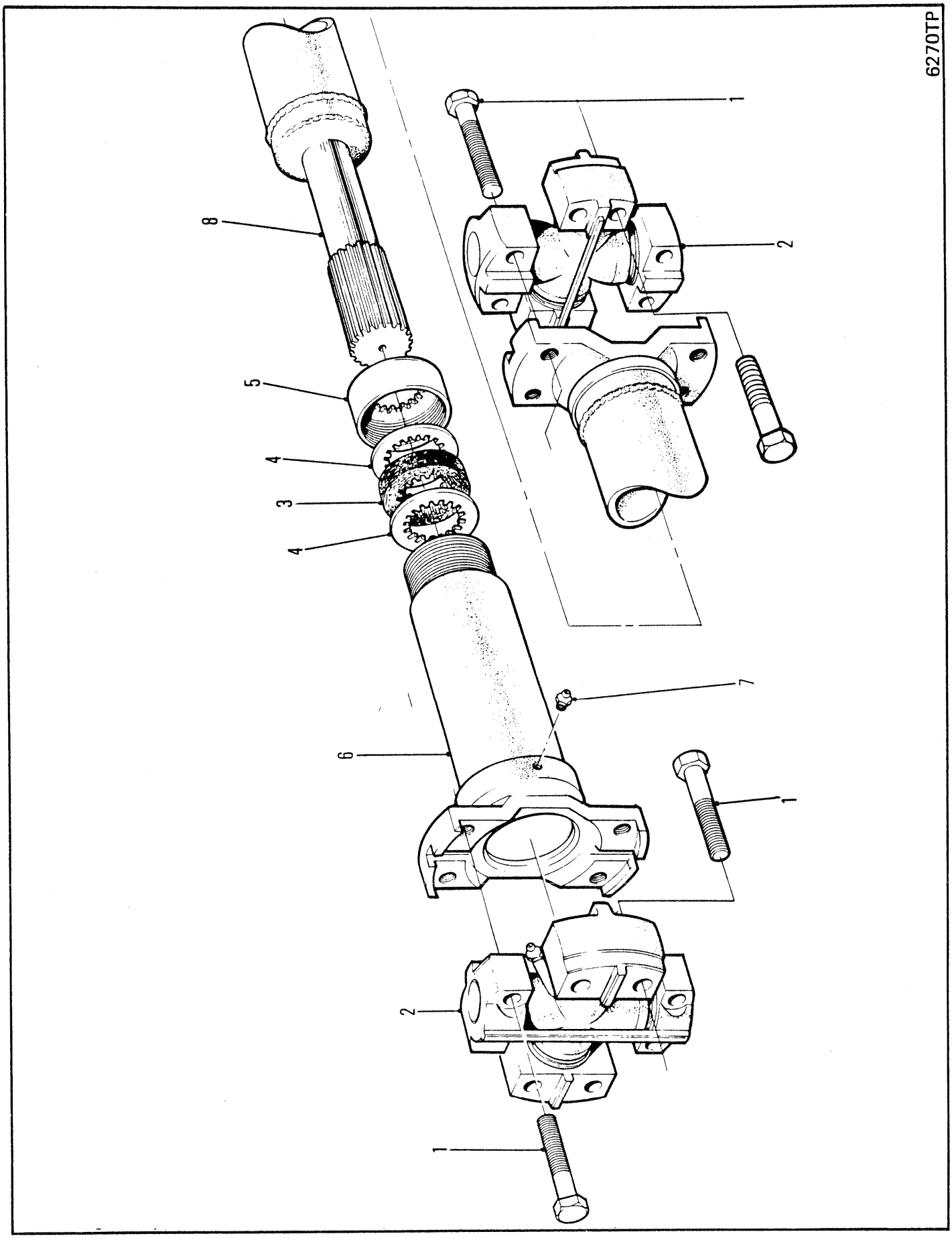
6270TP
1
2
8
5
4
3
4
7
6
1
2
1

# PROPELLER SHAFT ASSEMBLY TRANSMISSION/WINCH
# ENSEMBLE D'ARBRE D'ENTRAINEMENT-BOÎTE DE VITESSE/TREUIL
# ANTRIEBSWELLEN-AGGREGAT GETRIEBE/WINDE
# CONJUNTO EIXO DE PROPULSÃO-TRANSMISSÃO/GUINCHO
# CONJUNTO EJE PROPULSOR-TRANSMISIÓN/GUINCHE

| No. | Part No. | Qty | Description | Description | Benennung | Descrição | Descripción |
|---|---|---|---|---|---|---|---|
| A | [1]1911539 | 1 | Prop shaft assy | ens arbre propulsion | Kardanwelle vollst | conj eixo propulsor | conj eje impulsor |
| B | [2]1992254 | 1 | Slip yoke assy | ens chape coulissnte | Gleitjoch vollst | cj bloco corredìao | cj acople telescop |
| 1 | 18C000524 | 16 | Bolt | boulon | Bolzen | parafuso | bulón |
| 2 | 887737 | 2 | Spider assy | ens croisillon | Kreuzgelenk vollst | conj cruzeta | conj cruceta |
| 3 | 940081 | 1 | Seal | joint étanchéité | Dichtung | vedador | sello |
| 4 | 940653 | 2 | Washer | rondelle | Scheibe | arruela | arandela |
| 5 | 940654 | 1 | Retainer | arrêtoir | Halterung | retentor | retén |
| 6 | §------- | 1 | Slip yoke | chape coulissnte | Gleitkupplg | garfo corredìao | acople telescop |
| 7 | 10H000025 | 1 | Grease fitting | graisseur | Nippel Schmier | graxeira | grasera |
| 8 | 1990111 | 1 | Tube assy | assemblage de tube | Rohreinheit | conjunto de tubos | conjunto del tubo |

[1] Inc B, 1➟8

[2] Inc 3➟7

666CUM 500D-101-CAC➟500G-9999-CAC
666GM 513E-101-CAC➟513G-9999-CAC
666GMGR 515A-101-CAC➟515A-9999-CAC

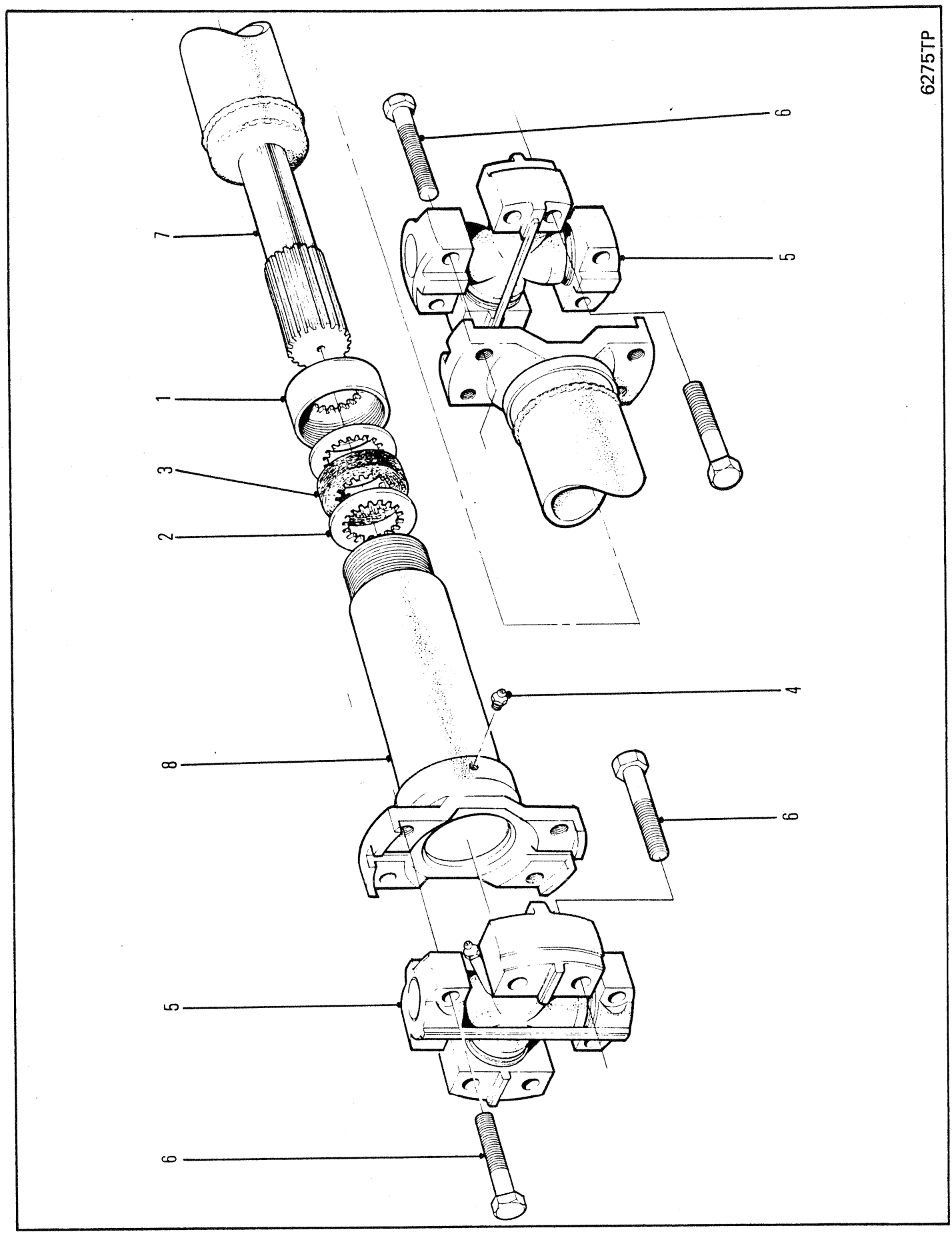
6275TP
1
2
3
4
5
6
7
8

# PROPELLER SHAFT ASSEMBLY, TRANSMISSION-FRONT AXLE
# ENSEMBLE ARBRE CARDAN, TRANSMISSION-PONT AVANT
# PROPELLER WELLENAGGREGAT, ÜBERSETZUNG-VORDERACHSE
# CONJUNTO HÉLICE EIXO, TRANSMISSÃO-EIXO FRENTE
# CONJUNTO DEL EJE CARDAN, TRANSMISIÓN-EJE DELANTERO

| No. | Part No. | Qty | Description | Description | Benennung | Descrição | Descripción |
|---|---|---|---|---|---|---|---|
| A | [1]1911538 | 1 | Prop shaft assy | ens arbre propulsion | Kardanwelle vollst | conj eixo propulsor | conj eje impulsor |
| B | [2]940224 | 1 | Slip yoke assy | ens chape coulissnte | Gleitjoch vollst | cj bloco corrediào | cj acople telescop |
| 1 | 940090 | 1 | Retainer | arrêtoir | Halterung | retentor | retén |
| 2 | 940091 | 2 | Washer | rondelle | Scheibe | arruela | arandela |
| 3 | 940092 | 1 | Seal | joint étanchéité | Dichtung | vedador | sello |
| 4 | 10H000025 | 1 | Grease fitting | graisseur | Nippel Schmier | graxeira | grasera |
| 5 | 944862 | 2 | Spider assy | ens croisillon | Kreuzgelenk vollst | conj cruzeta | conj cruceta |
| 6 | 18C000628 | 16 | Bolt | boulon | Bolzen | parafuso | bulón |
| 7 | 1990114 | 1 | Tube assy | assemblage de tube | Rohreinheit | conjunto de tubos | conjunto del tubo |
| 8 | §--------- | 1 | Slip yoke | chape coulissnte | Gleitkupplg | garfo corrediào | acople telescop |

[1] Inc 1➞8 No longer available. For service replacement, order 1935461 Propshaft Assembly.
[1] Inc 1➞8 Plus disponoble. Pour le remplacement, commander lensemble d'arbre d'hélice 1935461.
[1] Inc 1➞8 Nicht mehr erhältlich. Zum Ersatz bestelle man die Antriebswelle 1935461.
[1] Inc 1➞8 Não disponibilidade. Para reposição ordene conjunto de eixo propulsor 1935461.
[1] Inc 1➞8 No se produce más. Para el servicio de reemplazo, ordene de árbol propulsor 1935461.

[2] Inc 1➞4,6&8

666CUM 500D-101-CAC➞500G-9999-CAC
666GM 513E-101-CAC➞513G-9999-CAC
666GMGR 515A-101-CAC➞515A-9999-CAC

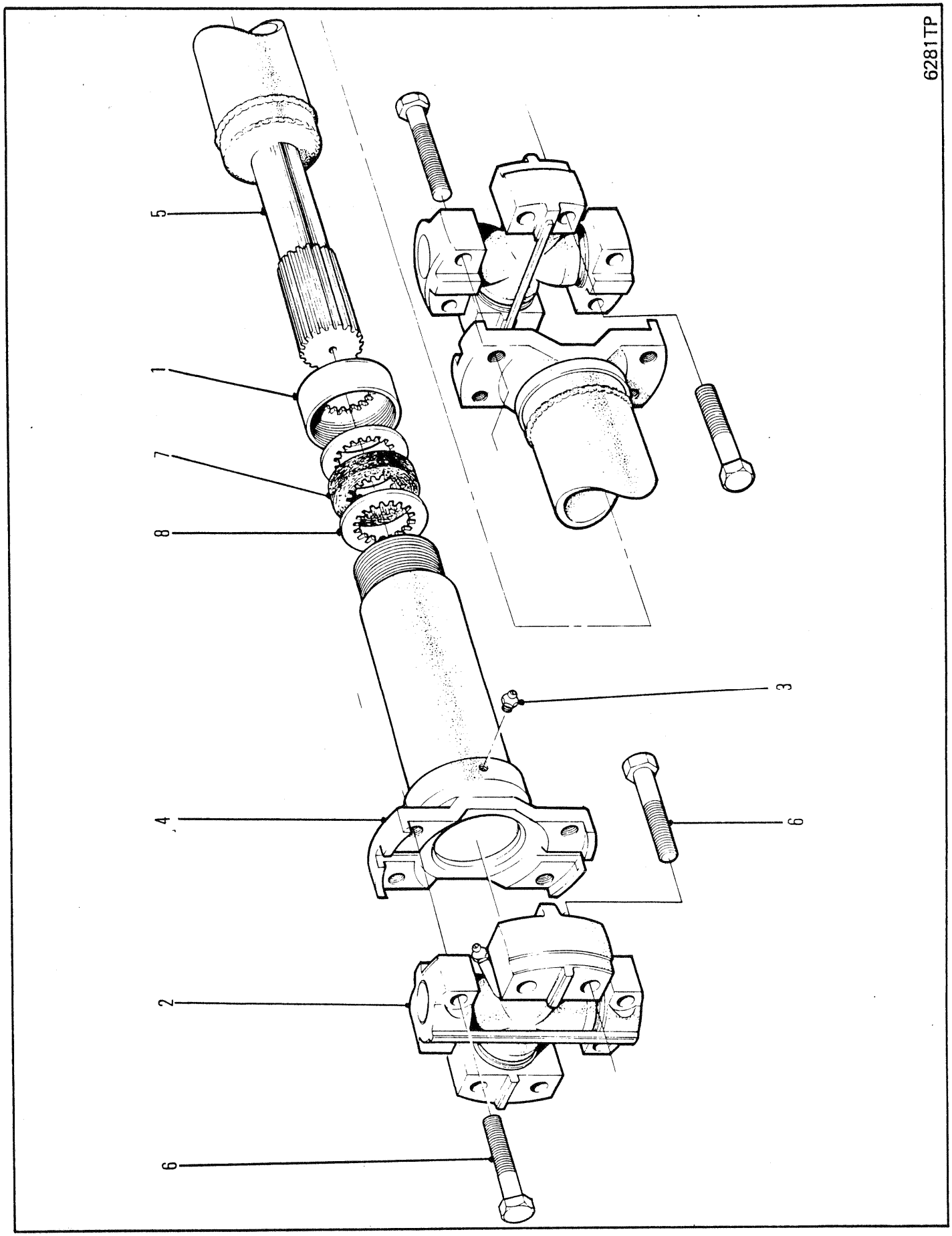
6281TP
5
1
7
8
3
4
6
2
6

# PROPELLER SHAFT ASSEMBLY, REAR AXLE INPUT
# ENSEMBLE D'ARBRE D'ENTRAÎNEMENT, ESSIEUX ARRIÈRE
# KARDANWELLE, VOLLSTÄNDIG, HINTERACHSEN
# CONJUNTO DE EIXO PROPULSOR, EIXOS TRASEIORS
# CONJUNTO DEL EJE PROPULSOR, EJES TRASEROS

| No. | Part No. | Qty | Description | Description | Benennung | Descrição | Descripción |
|---|---|---|---|---|---|---|---|
| A | [1,2]1924487 | 1 | Prop shaft assy | ens arbre propulsion | Kardanwelle vollst | conj eixo propulsor | conj eje impulsor |
| B | [4]1991313 | 1 | Slip yoke assy | ens chape coulissnte | Gleitjoch vollst | cj bloco corredião | cj acople telescop |
| 1 | 940090 | 1 | Retainer | arrêtoir | Halterung | retentor | retén |
| 2 | [3]944862 | 2 | Spider assy | ens croisillon | Kreuzgelenk vollst | conj cruzeta | conj cruceta |
| 3 | 10H000025 | 1 | Grease fitting | graisseur | Nippel Schmier | graxeira | grasera |
| 4 | §------- | 1 | Slip yoke | chape coulissnte | Gleitkupplg | garfo corredião | acople telescop |
| 5 | 1991311 | 1 | Tube assy | assemblage de tube | Rohreinheit | conjunto de tubos | conjunto del tubo |
| 6 | 18C000628 | 16 | Bolt | boulon | Bolzen | parafuso | bulón |
| 7 | 5299099 | 1 | Seal | joint étanchéité | Dichtung | vedador | sello |
| 8 | 5299100 | 2 | Washer | rondelle | Scheibe | arruela | arandela |

[1] Used only on machines equipped with 1917296 - midmount assy.
[1] Utilisé uniquement sur machines équipées de 1917296 - ensemble montage au milieu
[1] Wird nur für Maschinen verwendet, die mit 1917296 - Mittelaufbau ausgerüstet sind.
[1] Utilizado apenas em máquinas equipadas com conjunto de montagem intermediária 1917296
[1] Utilizado sólo en máquinas equipadas con 1917296 - conjunto de montaje intermedio

[2] Inc 1➡8

[3] Inc 3

[4] Inc 1,7 & 8

| | |
|---|---|
| 666CUM | 500G-2136-CAC➡500G-2335-CAC |
| 666GM | 513G-2441-CAC➡513G-2810-CAC |
| 666GMGR | 515A-316-CAC➡515A-630-CAC |

6284TP

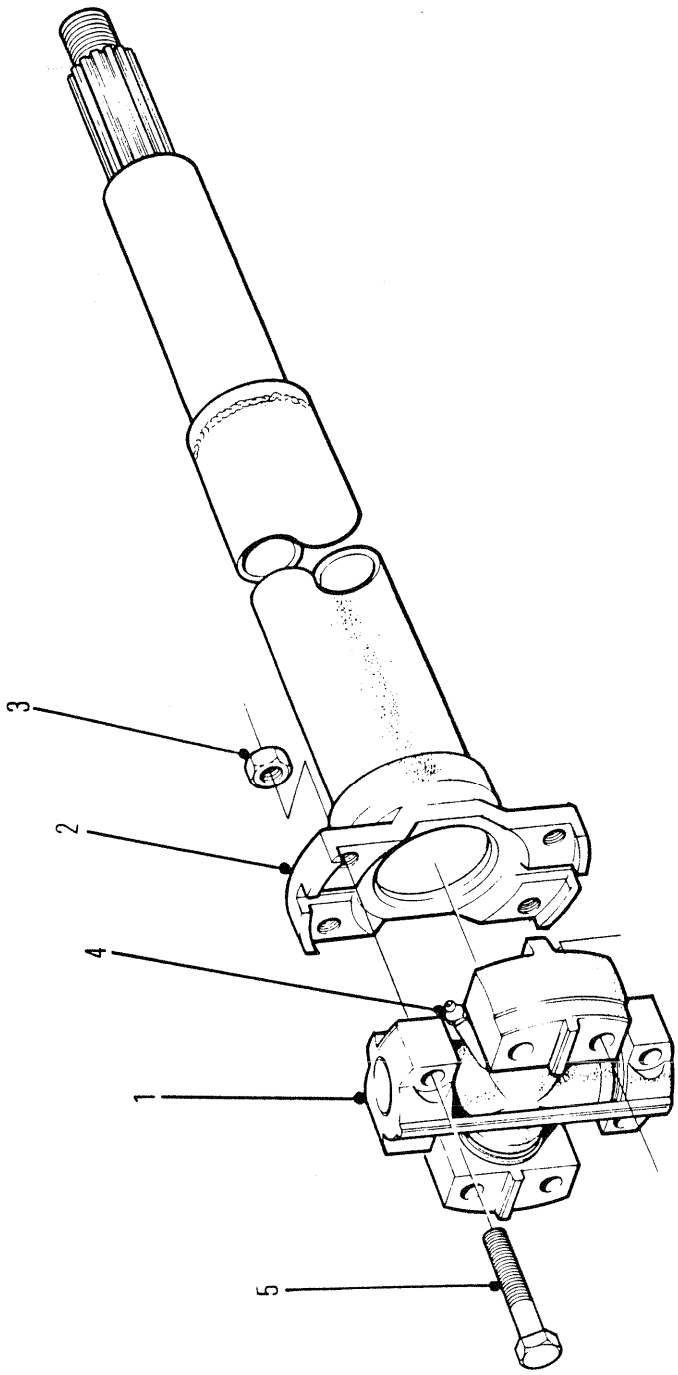

# PROPELLER SHAFT ASSEMBLY, REAR AXLE INPUT⊠
# ENSEMBLE D'ARBRE D'ENTRAÎNEMENT, ESSIEUX ARRIÈRE⊠
# KARDANWELLE, VOLLSTÄNDIG, HINTERACHSEN⊠
# CONJUNTO DE EIXO PROPULSOR, EIXOS TRASEIORS⊠
# CONJUNTO DEL EJE PROPULSOR, EJES TRASEROS⊠

| No. | Part No. | Qty | Description | Description | Benennung | Descrição | Descripción |
|---|---|---|---|---|---|---|---|
| A | [2]1913591 | 1 | Prop shaft assy | ens arbre propulsion | Kardanwelle vollst | conj eixo propulsor | conj eje impulsor |
| 1 | [1]944862 | 1 | Spider assy | ens croisillon | Kreuzgelenk vollst | conj cruzeta | conj cruceta |
| 2 | 1992265 | 1 | Tube assy | assemblage de tube | Rohreinheit | conjunto de tubos | conjunto del tubo |
| 3 | 8D0000006 | 16 | Nut | écrou | Mutter | porca | tuerca |
| 4 | 10H000035 | 2 | Fitting | ajustage | Verbindung | ajuste | accesorio |
| 5 | 18C000632 | 16 | Bolt | boulon | Bolzen | parafuso | bulón |

[1] Inc 4

[2] ⊠ with Heavy Duty Axle
[2] ⊠ avec essieu lourd
[2] ⊠ Mit Schwerachse
[2] ⊠ com eixo para trabalhos pedados
[2] ⊠ con eje para trabajo pesado

666CUM 500E-101-CAC→500E-9999-CAC
666GM 513E-101-CAC→513E-9999-CAC

6157

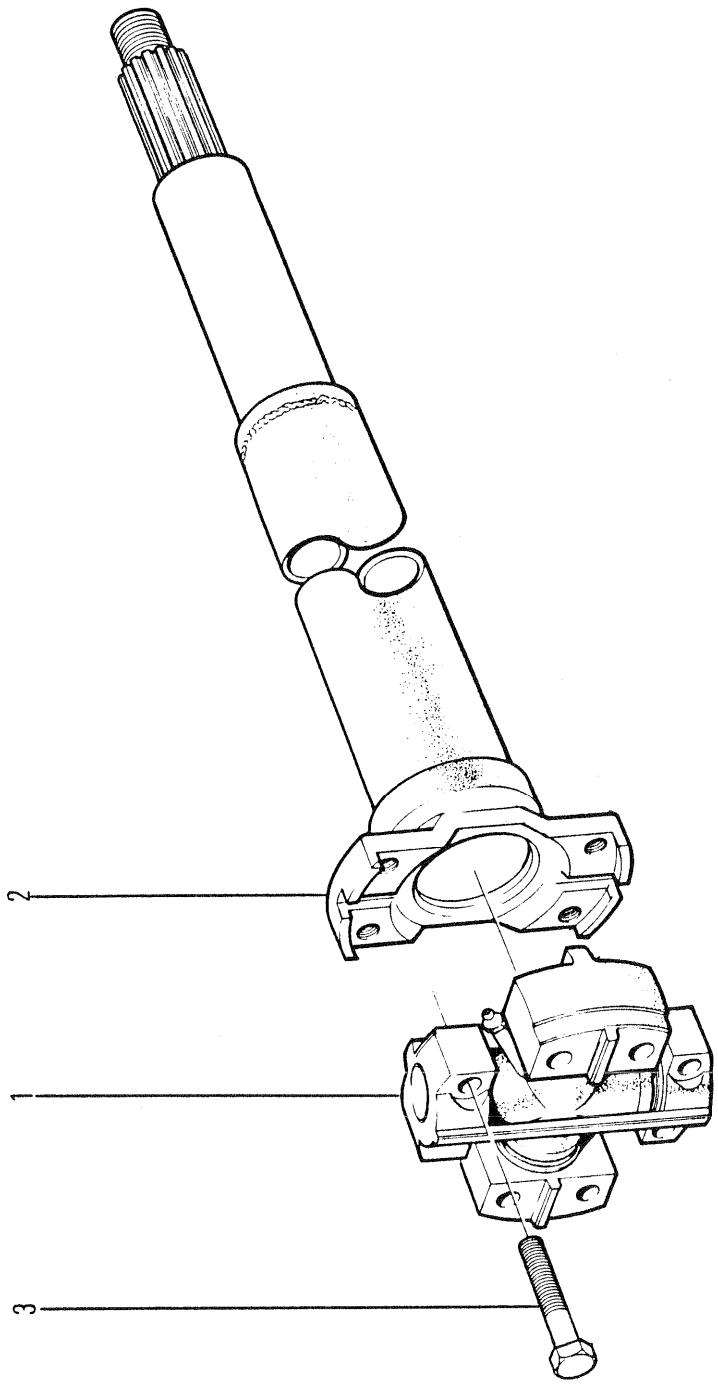


6287TP

# PROPELLER SHAFT ASSEMBLY, REAR AXLE INPUT
# ENSEMBLE D'ARBRE D'ENTRAÎNEMENT, ESSIEUX ARRIÈRE
# KARDANWELLE, VOLLSTÄNDIG, HINTERACHSEN
# CONJUNTO DE EIXO PROPULSOR, EIXOS TRASEIROS
# CONJUNTO DEL EJE PROPULSOR, EJES TRASEROS

| No. | Part No. | Qty | Description | Description | Benennung | Descrição | Descripción |
|---|---|---|---|---|---|---|---|
| A | [1]1911543 | 1 | Propshaft | arbre de lhélice | Propellerwelle | eixo de propulsão | eje propulsor |
| 1 | 944862 | 1 | Spider assy | ens croisillon | Kreuzgelenk vollst | conj cruzeta | conj cruceta |
| 2 | 1990104 | 1 | Tube assy | assemblage de tube | Rohreinheit | conjunto de tubos | conjunto del tubo |
| 3 | 18C000628 | 8 | Bolt | boulon | Bolzen | parafuso | bulón |

[1] Inc 1➡3

666CUM 500D-101-CAC➡500G-2125-CAC
666GM 513E-101-CAC➡513G-2440-CAC
666GMGR 515A-101-CAC➡515A-315-CAC

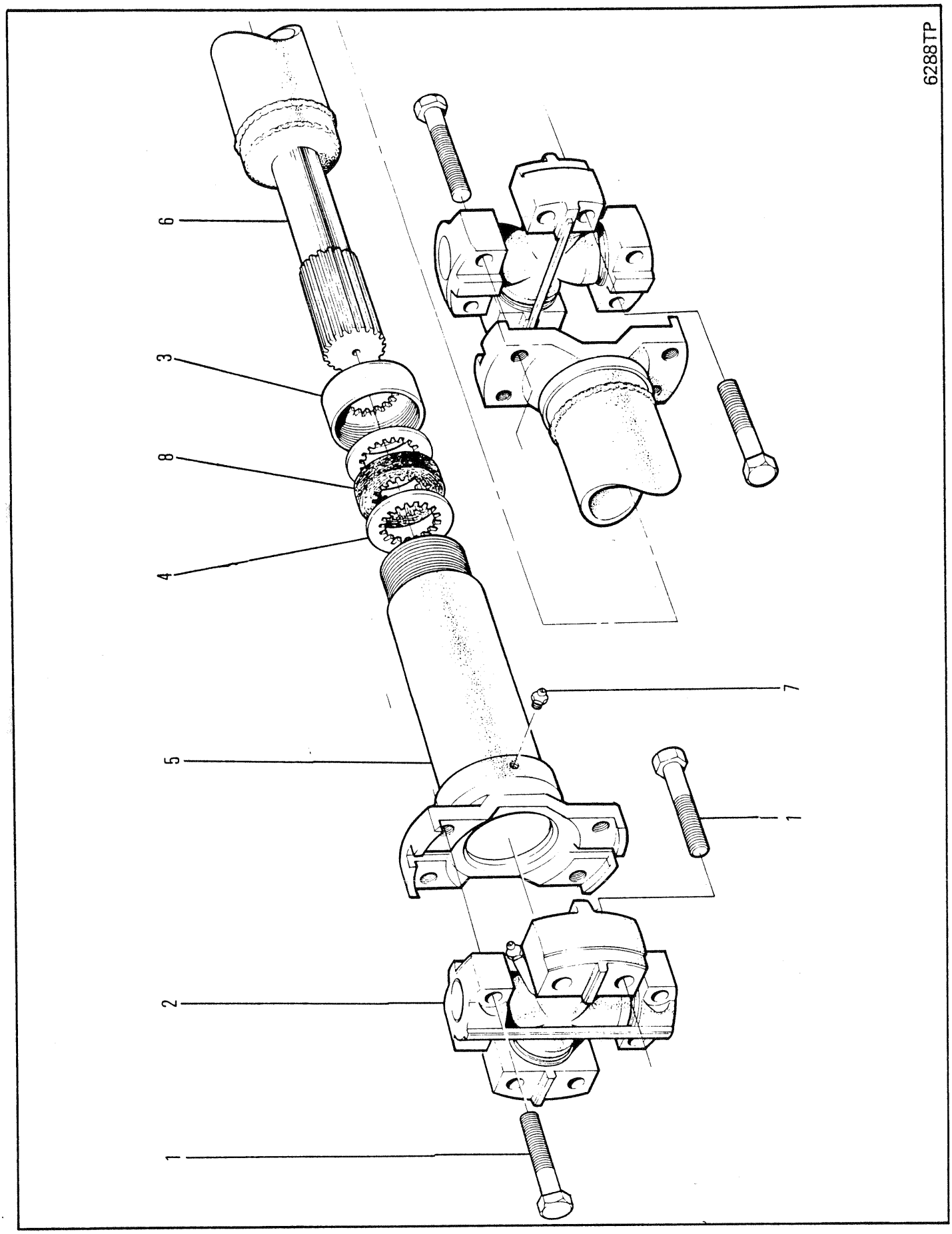
6288TP
6
3
8
4
5
2
1
7
1

# PROPELLER SHAFT ASSEMBLY, REAR AXLE INPUT
# ENSEMBLE D'ARBRE D'ENTRAÎNEMENT, ESSIEUX ARRIÈRE
# KARDANWELLE, VOLLSTÄNDIG, HINTERACHSEN
# CONJUNTO DE EIXO PROPULSOR, EIXOS TRASEIORS
# CONJUNTO DEL EJE PROPULSOR, EJES TRASEROS

| No. | Part No. | Qty | Description | Description | Benennung | Descrição | Descripción |
|---|---|---|---|---|---|---|---|
| A | [1]1925428 | 1 | Prop shaft assy | ens arbre propulsion | Kardanwelle vollst | conj eixo propulsor | conj eje impulsor |
| B | [2]1991953 | 1 | Slip yoke assy | ens chape coulissnte | Gleitjoch vollst | cj bloco corrediào | cj acople telescop |
| 1 | 18C000628 | 16 | Bolt | boulon | Bolzen | parafuso | bulón |
| 2 | 944862 | 2 | Spider assy | ens croisillon | Kreuzgelenk vollst | conj cruzeta | conj cruceta |
| 3 | 940090 | 1 | Cap | chapeau | Kappe | tampa | tapa |
| 4 | 5299100 | 2 | Washer | rondelle | Scheibe | arruela | arandela |
| 5 | §------- | 1 | Slip yoke | chape coulissnte | Gleitkupplg | garfo corrediào | acople telescop |
| 6 | 1991951 | 1 | Tube assy | assemblage de tube | Rohreinheit | conjunto de tubos | conjunto del tubo |
| 7 | 10H000035 | 1 | Fitting | ajustage | Verbindung | ajuste | accesorio |
| 8 | 5299099 | 1 | Seal | joint étanchéité | Dichtung | vedador | sello |

[1] Inc B, 1➞8

[2] Inc 3➞5 & 8

666CUM 500G-2336-CAC➞500G-9999-CAC
666GM 513G-2811-CAC➞513G-9999-CAC
666GMGR 515A-631-CAC➞515A-9999-CAC

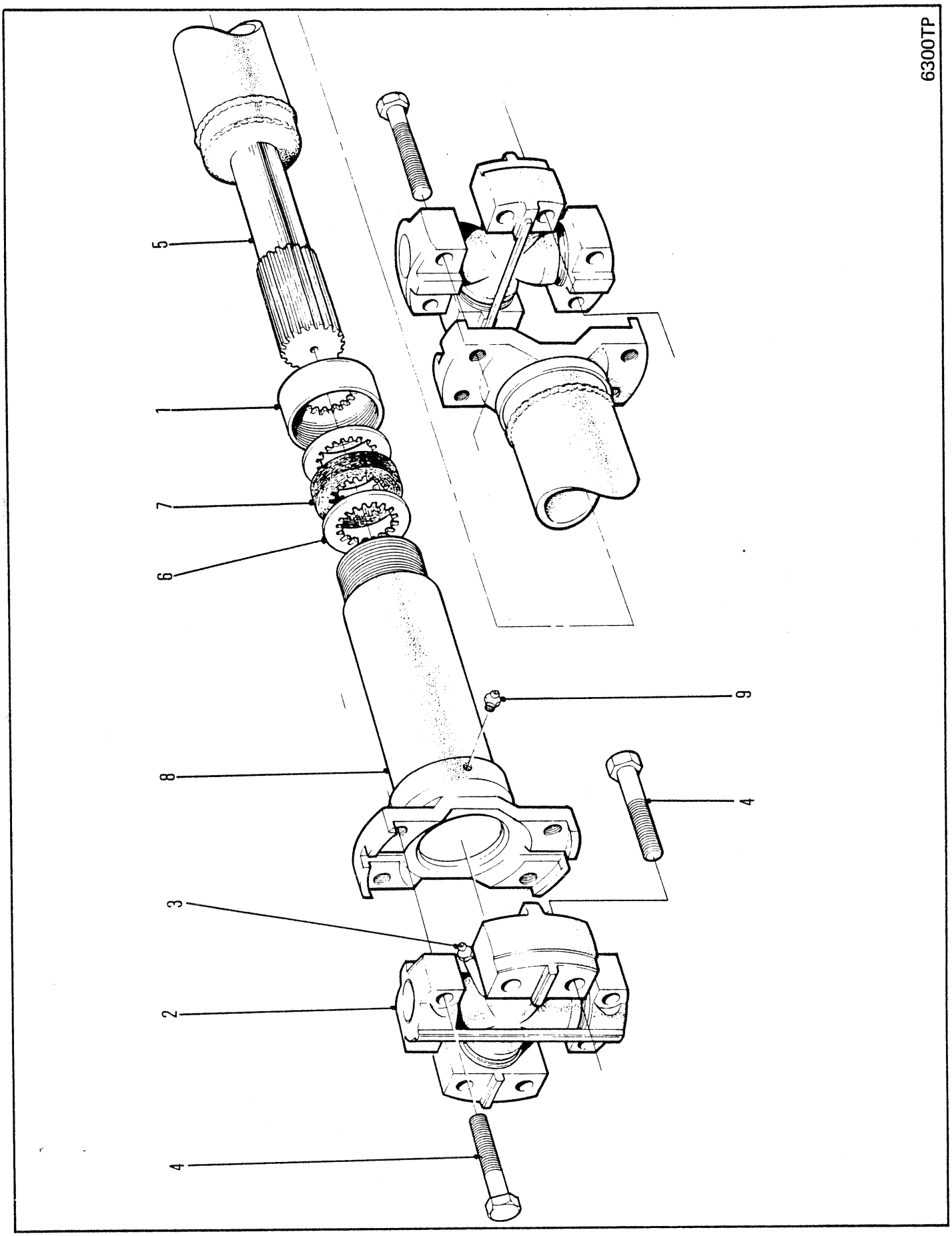
6300TP
5
1
7
6
9
8
4
3
2
4

# PROPELLER SHAFT ASSEMBLY, TRANSMISSION/MID MOUNT BEARING
# ARBRE D'ENTRAÎNEMENT, TRANSMISSION/PALIER CENTRAL,ENSEMBLE
# GELENKWELLE VOLLSTÄNDIG, GETRIEBE/MITTELLAGER
# EIXO PROPULSOR, TRANSMISSÃO/MANCAL CENTRAL CONJUNTO
# ARBOL PROPULSOR, TRANSMISSIÓN/COJINETE CENTRAL CONJUNTO

| No. | Part No. | Qty | Description | Description | Benennung | Descrição | Descripción |
|---|---|---|---|---|---|---|---|
| A | [1]1911528 | 1 | Prop shaft assy | ens arbre propulsion | Kardanwelle vollst | conj eixo propulsor | conj eje impulsor |
| B | [3]1992253 | 1 | Slip yoke assy | ens chape coulissnte | Gleitjoch vollst | cj bloco corrediào | cj acople telescop |
| 1 | [4]940090 | 1 | Retainer | arrêtoir | Halterung | retentor | retén |
| 2 | [2]944862 | 2 | Spider assy | ens croisillon | Kreuzgelenk vollst | conj cruzeta | conj cruceta |
| 3 | 10H000035 | 2 | Fitting | ajustage | Verbindung | ajuste | accesorio |
| 4 | 18C000628 | 16 | Bolt | boulon | Bolzen | parafuso | bulón |
| 5 | 1990124 | 1 | Tube assy | assemblage de tube | Rohreinheit | conjunto de tubos | conjunto del tubo |
| 6 | 1990125 | 2 | Washer | rondelle | Scheibe | arruela | arandela |
| 7 | 1990126 | 1 | Seal | joint étanchéité | Dichtung | vedador | sello |
| 8 | §--------- | 1 | Slip yoke | chape coulissnte | Gleitkupplg | garfo corrediào | acople telescop |
| 9 | 10H000025 | 1 | Fitting | ajustage | Verbindung | ajuste | accesorio |

[1] Inc 1➞9 No longer available. For service replacement, order 1935462 Propshaft Assembly.
[1] Inc 1➞9 Plus disponoble. Pour le remplacement, commander lensemble d'arbre d'hélice 1935462.
[1] Inc 1➞9 Nicht mehr erhältlich. Zum Ersatz bestelle man die Antriebswelle 1935462.
[1] Inc 1➞9 Não disponibilidade. Para reposição ordene conjunto de eixo propulsor 1935462.
[1] Inc 1➞9 No se produce más. Para el servicio de reemplazo, ordene de árbol propulsor 1935462.

[2] Inc 3

[3] Inc 1 & 6➞9

[4] Services with kit 940224
[4] Réparer avec le jeu 940224
[4] Mit Kit Nr. 940224 warten
[4] Prestar manutenção com estojo No. 940224
[4] Mantener con estuche 940224

666CUM 500G-2126-CAC➞500G-9999-CAC
666GM 513G-2441-CAC➞513G-9999-CAC
666GMGR 515A-316-CAC➞515A-9999-CAC

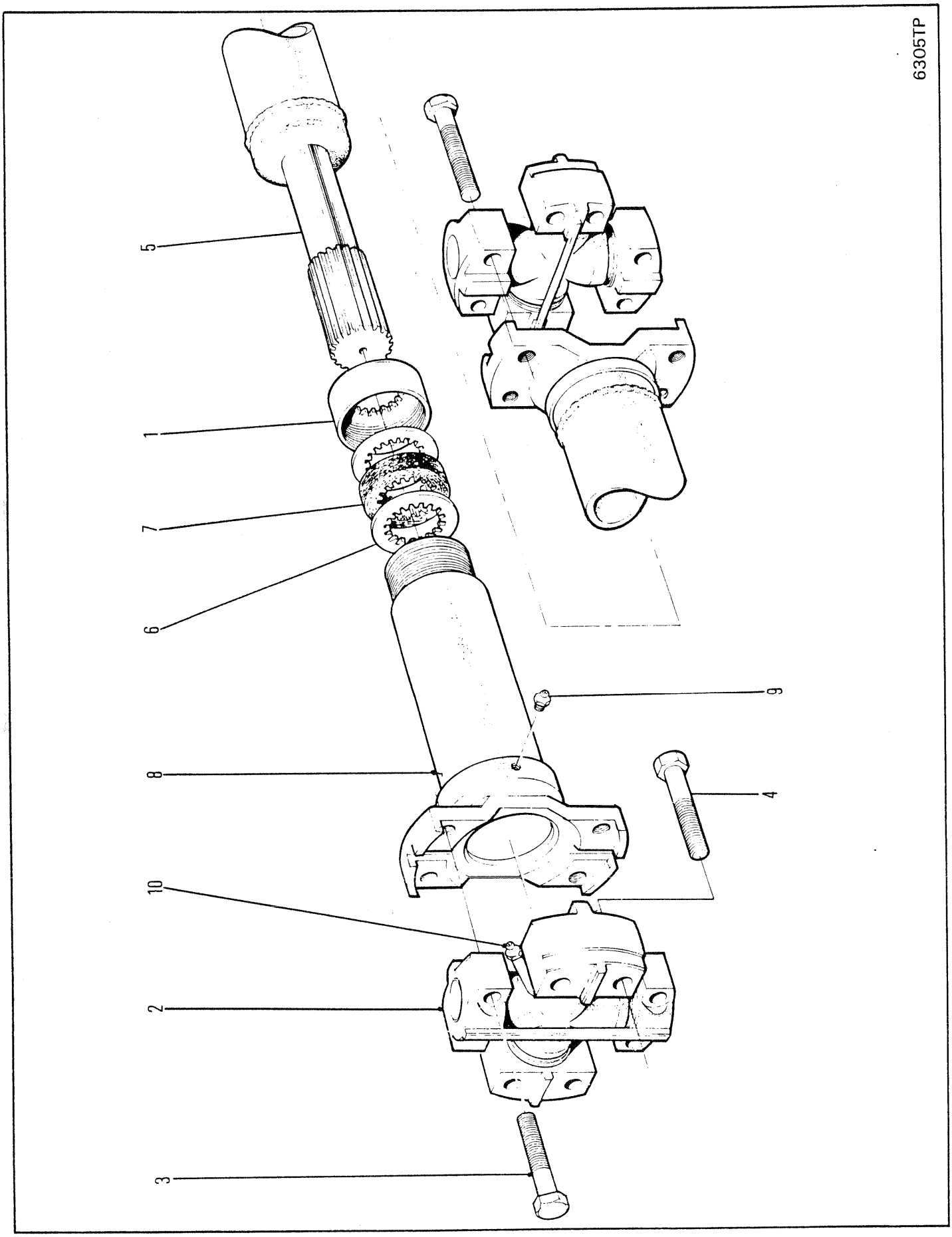
6305TP
5
1
7
6
9
8
4
10
2
3

# PROPELLER SHAFT ASSEMBLY, TRANSMISSION/PILLOW BLOCK
# ARBRE D'ENTRAÎNEMENT, TRANSMISSION/PALIER
# GELENKWELLE VOLLSTÄNDIG, GETRIEBE/LAGERBOCK
# EIXO PROPULSOR, TRANSMISSÃO/CHUMACEIRA
# ARBOL PROPULSOR, TRANSMISSIÓN/DESCANSO

| No. | Part No. | Qty | Description | Description | Benennung | Descrição | Descripción |
|---|---|---|---|---|---|---|---|
| A | [1]1911528 | 1 | Prop shaft assy | ens arbre propulsion | Kardanwelle vollst | conj eixo propulsor | conj eje impulsor |
| B | [3]1992253 | 1 | Slip yoke assy | ens chape coulissnte | Gleitjoch vollst | cj bloco corrediào | cj acople telescop |
| 1 | [4]940090 | 1 | Retainer | arrêtoir | Halterung | retentor | retén |
| 2 | [2]944862 | 2 | Spider assy | ens croisillon | Kreuzgelenk vollst | conj cruzeta | conj cruceta |
| 3 | 18C000628 | 8 | Bolt | boulon | Bolzen | parafuso | bulón |
| 4 | 18C000632 | 8 | Bolt | boulon | Bolzen | parafuso | bulón |
| 5 | 1990124 | 1 | Tube assy | assemblage de tube | Rohreinheit | conjunto de tubos | conjunto del tubo |
| 6 | 1990125 | 2 | Washer | rondelle | Scheibe | arruela | arandela |
| 7 | 1990126 | 1 | Washer | rondelle | Scheibe | arruela | arandela |
| 8 | §--------- | 1 | Slip yoke | chape coulissnte | Gleitkupplg | garfo corrediào | acople telescop |
| 9 | 10H000025 | 1 | Fitting | ajustage | Verbindung | ajuste | accesorio |
| 10 | 10H000035 | 2 | Fitting | ajustage | Verbindung | ajuste | accesorio |

[1] Inc 1→10 No longer available. For service replacement, order 1935462 Propshaft Assembly.
[1] Inc 1→10 Plus disponoble. Pour le remplacement, commander l'ensemble d'arbre d'hélice 1935462.
[1] Inc 1→10 Nicht mehr erhältlich. Zum Ersatz bestelle man die Antriebswelle 1935462.
[1] Inc 1→10 Não disponibilidade. Para reposição ordene conjunto de eixo propulsor 1935462.
[1] Inc 1→10 No se produce más. Para el servicio de reemplazo, ordene de árbol propulsor 1935462.

[2] Inc 10

[3] Inc 1 & 6→9

[4] Services with kit 940224
[4] Réparer avec le jeu 940224
[4] Mit Kit Nr. 940224 warten
[4] Prestar manutenção com estojo No. 940224
[4] Mantener con estuche 940224

666CUM 500D-101-CAC→500G-9999-CAC
666GM 513E-101-CAC→513G-2440-CAC
666GMGR 515A-101-CAC→515A-315-CAC

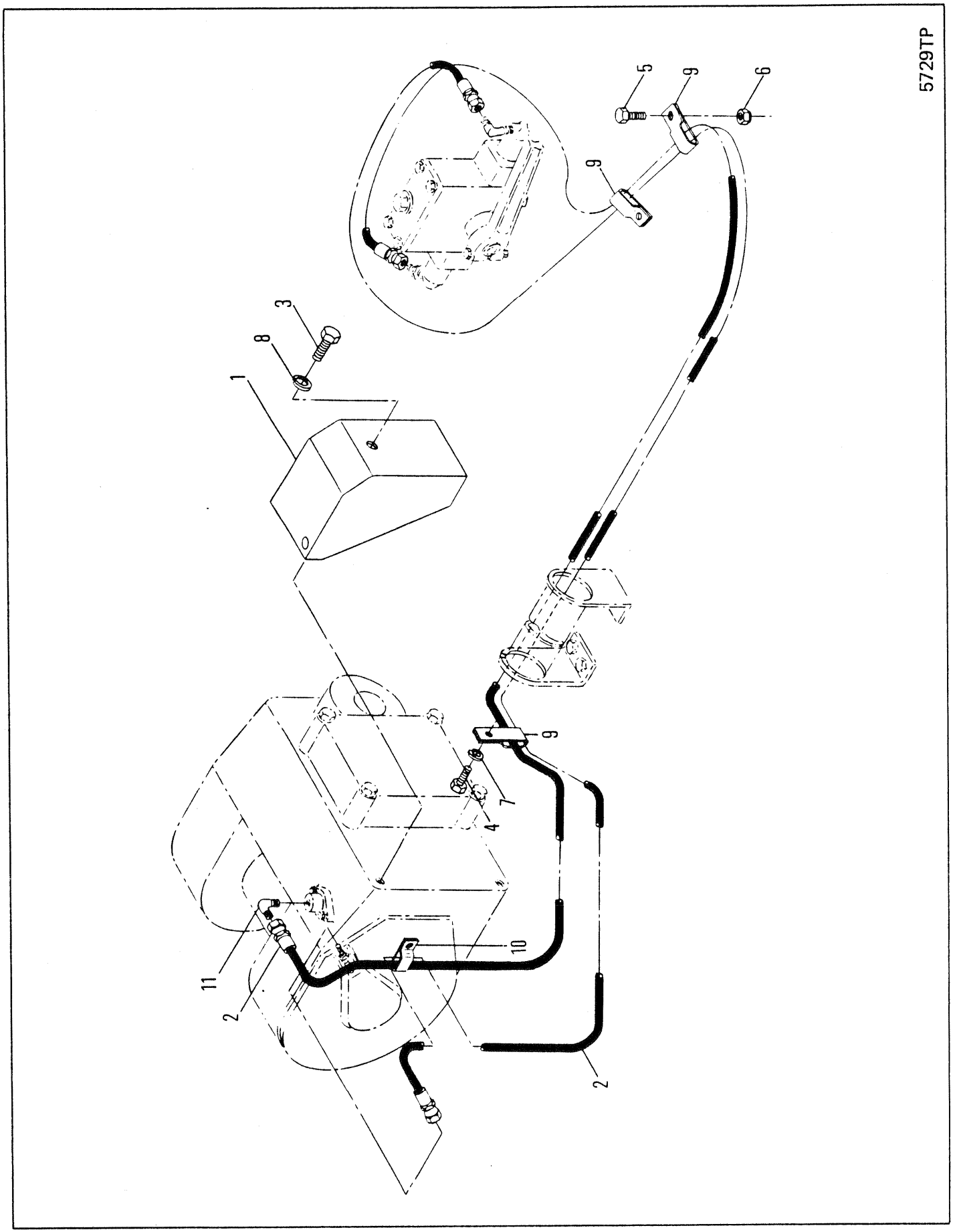
5729TP
5
9
6
9
3
8
1
9
7
4
10
11
2
2

# WINCH CONTROLS & HYDRAULICS
# COMMANDES DE TREUIL ET DHYDRAULIQUE
# WINDEN- UND HYDRAULIKBEDIENUNG
# CONTROLE E HIDRÁULICO DO GUINCHO
# CONTROLES E HIDÃULICA DEL GUINCHE

| No. | Part No. | Qty | Description | Description | Benennung | Descrição | Descripción |
|---|---|---|---|---|---|---|---|
| 1 | **1901370** | 1 | Guard | protecteur | Schutz | proteção | protector |
| 2 | **1902052** | 2 | Hose | tuyau flexible | Schlauch | mangueira | manguera |
| 3 | **17C001228** | 2 | Bolt | boulon | Bolzen | parafuso | bulón |
| 4 | **18C000614** | 1 | Bolt | boulon | Bolzen | parafuso | bulón |
| 5 | **18C000620** | 2 | Bolt | boulon | Bolzen | parafuso | bulón |
| 6 | **18D000006** | 2 | Nut | écrou | Mutter | porca | tuerca |
| 7 | **24E000006** | 1 | Lockwasher | rondelle frein | Sicherungsscheibe | arruela de pressão | arandela seguridad |
| 8 | **24E000012** | 2 | Lockwasher | rondelle frein | Sicherungsscheibe | arruela de pressão | arandela seguridad |
| 9 | **31H000034** | 3 | Clip | attache | Schelle | braçadeira | abrazadera |
| 10 | **31H000036** | 1 | Clip | attache | Schelle | braçadeira | abrazadera |
| 11 | **83F000003** | 1 | Elbow | coude | Winkelrohr | cotovêlo | codo |

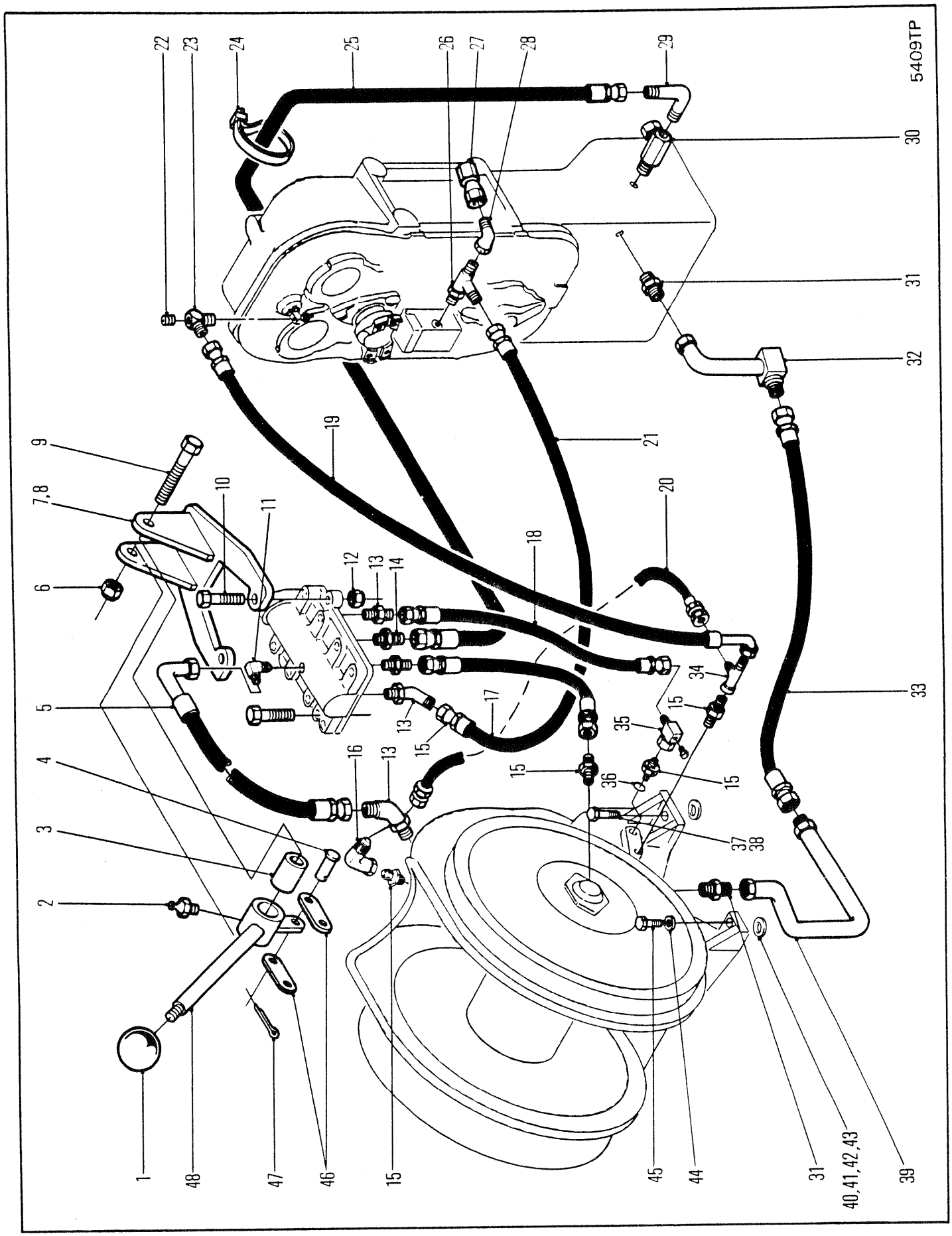
5409TP
1
2
3
4
5
6
7,8
9
10
11
12
13
14
15
16
17
18
19
20
21
22
23
24
25
26
27
28
29
30
31
32
33
34
35
36
37
38
39
40,41,42,43
44
45
46
47
48

# WINCH CONTROLS & HYDRAULICS-CLARK
# COMMANDES DE TREUIL ET D'HYDRAULIQUE-CLARK
# WINDEN- UND HYDRAULIKBEDIENUNG-CLARK
# CONTROLE E HIDRÁULICO DO GUINCHO-CLARK
# CONTROLES E HIDÁULICA DEL GUINCHE-CLARK

| No. | Part No. | Qty | Description | Description | Benennung | Descrição | Descripción |
|---|---|---|---|---|---|---|---|
| 1 | **509772** | 1 | Knob | bouton | Knopf | manípula | botón |
| 2 | **10H000025** | 1 | Grease fitting | graisseur | Nippel Schmier | graxeira | grasera |
| 3 | **1902755** | 1 | Sleeve | manchon | Muffe | luva | manguito |
| 4 | **894831** | 2 | Pin | goupille | Stift | pino | pasador |
| 5 | **1904810** | 1 | Hose | tuyau flexible | Schlauch | mangueira | manguera |
| 6 | **17D000006** | 1 | Nut | écrou | Mutter | porca | tuerca |
| 7 | **1902750** | 1 | Bracket | support | Winkel | grampo | grampa |
| 8 | **1919951** | 1 | Bracket | support | Winkel | grampo | grampa |
| 9 | **17C000628** | 1 | Bolt | boulon | Bolzen | parafuso | bulón |
| 10 | **17C000636** | 2 | Bolt | boulon | Bolzen | parafuso | bulón |
| 11 | **83F000003** | 1 | Elbow | coude | Winkelrohr | cotovêlo | codo |
| 12 | **17D000003** | 3 | Nut | écrou | Mutter | porca | tuerca |
| 13 | **18K000005** | 4 | Fitting | ajustage | Verbindung | ajuste | accesorio |
| 14 | **89F000007** | 1 | Fitting | ajustage | Verbindung | ajuste | accesorio |
| 15 | **15K000005** | 4 | Fitting | ajustage | Verbindung | ajuste | accesorio |
| 16 | **11K000005** | 1 | Elbow | coude | Winkelrohr | cotovêlo | codo |
| 17 | **1905117** | 1 | Hose | tuyau flexible | Schlauch | mangueira | manguera |
| 18 | **1904807** | 2 | Hose | tuyau flexible | Schlauch | mangueira | manguera |
| 19 | **1906369** | 1 | Hose | tuyau flexible | Schlauch | mangueira | manguera |
| 20 | [1]**1905864** | 1 | Hose | tuyau flexible | Schlauch | mangueira | manguera |
| 21 | **2750296** | 1 | Hose | tuyau flexible | Schlauch | mangueira | manguera |
| 22 | **40K000007** | 1 | Plug | bouchon | Stopfen | bujão | tapón |
| 23 | **793742** | 1 | Elbow | coude | Winkelrohr | cotovêlo | codo |
| 24 | **1539058** | 1 | Tie strap | bande dattache | Befestigungsband | cinta de ligação | banda de atadura |
| 25 | **1916969** | 1 | Hose | tuyau flexible | Schlauch | mangueira | manguera |
| 26 | **21K000006** | 1 | Tee | raccord T | T-Verbindungsstück | te | te |
| 27 | **1542360** | 1 | Adapter | adaptateur | Zwischenstück | adaptador | adaptador |
| 28 | **12K000006** | 1 | Fitting | ajustage | Verbindung | ajuste | accesorio |
| 29 | **83F000006** | 1 | Elbow | coude | Winkelrohr | cotovêlo | codo |
| 30 | **716464** | 1 | Fitting | ajustage | Verbindung | ajuste | accesorio |
| 31 | **89F000010** | 2 | Elbow | coude | Winkelrohr | cotovêlo | codo |
| 32 | **1906286** | 1 | Frame | châssis | Fahrgestell | chassi | bastidor |
| 33 | **1906370** | 1 | Hose | tuyau flexible | Schlauch | mangueira | manguera |
| 34 | [1]**13K000005** | 1 | Tee | raccord T | T-Verbindungsstück | te | te |
| 35 | **17K000005** | 1 | Fitting | ajustage | Verbindung | ajuste | accesorio |
| 36 | **91F000005** | 1 | O-ring | joint torique | O Ring | anel-O | anillo-O |
| 37 | **17C002044** | 2 | Bolt | boulon | Bolzen | parafuso | bulón |
| 38 | **17C002040** | 2 | Bolt | boulon | Bolzen | parafuso | bulón |
| 39 | **1906387** | 1 | Tube | tube | Rohr | tubo | tubo |
| 40 | **27E000016** | - | Flatwasher | rondelle plate | Unterlegscheibe | arruela chata | arandela plana |
| 41 | **1928246** | - | Shim .0179 | cale 0,45MM | Beilage 0,45MM | calço 0,45MM | planchita 0,45MM |
| 42 | ‡**1928247** | - | Shim .0478 | cale 1,21MM | Beilage 1,21MM | calço 1,21MM | planchita 1,21MM |
| 43 | ‡**1928248** | - | Shim .0299 | cale 0,76MM | Beilage 0,76MM | calço 0,76MM | planchita 0,76MM |
| 44 | **1503564** | 2 | Flatwasher | rondelle plate | Unterlegscheibe | arruela chata | arandela plana |
| 45 | **17C002048** | 2 | Bolt | boulon | Bolzen | parafuso | bulón |

[1] □W-311-1

666CUM 500D-101-CAC→500G-9999-CAC
666GM 513E-101-CAC→513G-9999-CAC
666GMGR 515A-101-CAC→515A-9999-CAC

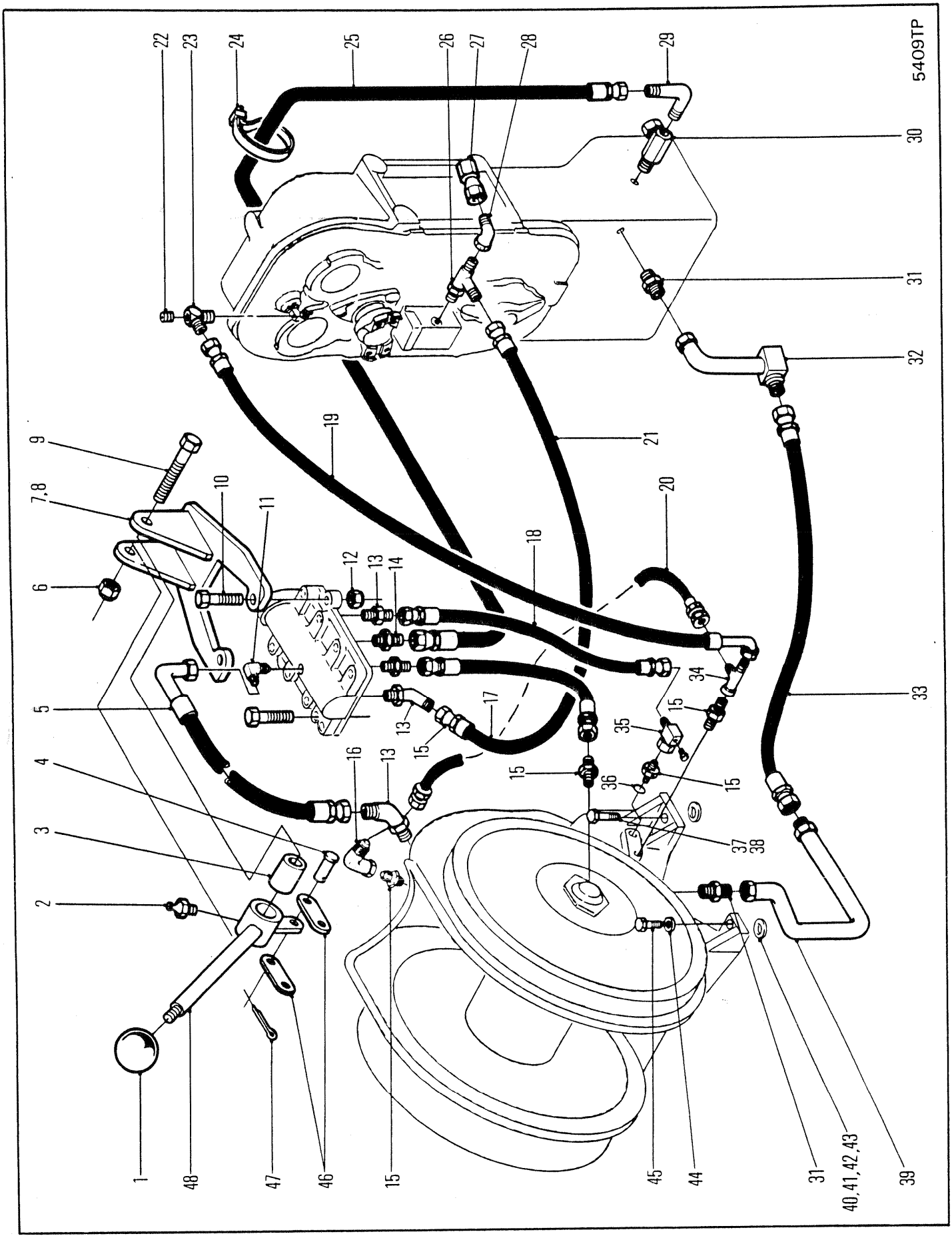
5409TP
1
2
3
4
5
6
7,8
9
10
11
12
13
14
15
16
17
18
19
20
21
22
23
24
25
26
27
28
29
30
31
32
33
34
35
36
37
38
39
40,41,42,43
44
45
46
47
48

## WINCH CONTROLS & HYDRAULICS-CLARK
## COMMANDES DE TREUIL ET D'HYDRAULIQUE-CLARK
## WINDEN- UND HYDRAULIKBEDIENUNG-CLARK
## CONTROLE E HIDRÁULICO DO GUINCHO-CLARK
## CONTROLES E HIDÁULICA DEL GUINCHE-CLARK

| No. | Part No. | Qty | Description | Description | Benennung | Descrição | Descripción |
|---|---|---|---|---|---|---|---|
| 46 | **1902756** | 2 | Link | articulation | Gelenk | articulação | articulación |
| 47 | **1F0000316** | 2 | Pin,cotter | goupille fendue | Splint | contrapino | chaveta dos patas |
| 48 | **1905159** | 1 | Lever | levier | Hebel | alavanca | palanca |
| 49 | †**1905685** | 1 | Hose guide | guide de tuyau souple | Schlauchführung | guia de mangueira | guia de manguera |
| 50 | †**17C000828** | 2 | Bolt | boulon | Bolzen | parafuso | bulón |
| 51 | †**675227** | 1 | Bearing | palier | Lager | mancal | cojinete |

1 □W-311-1

666CUM 500D-101-CAC→500G-9999-CAC
666GM 513E-101-CAC→513G-9999-CAC
666GMGR 515A-101-CAC→515A-9999-CAC

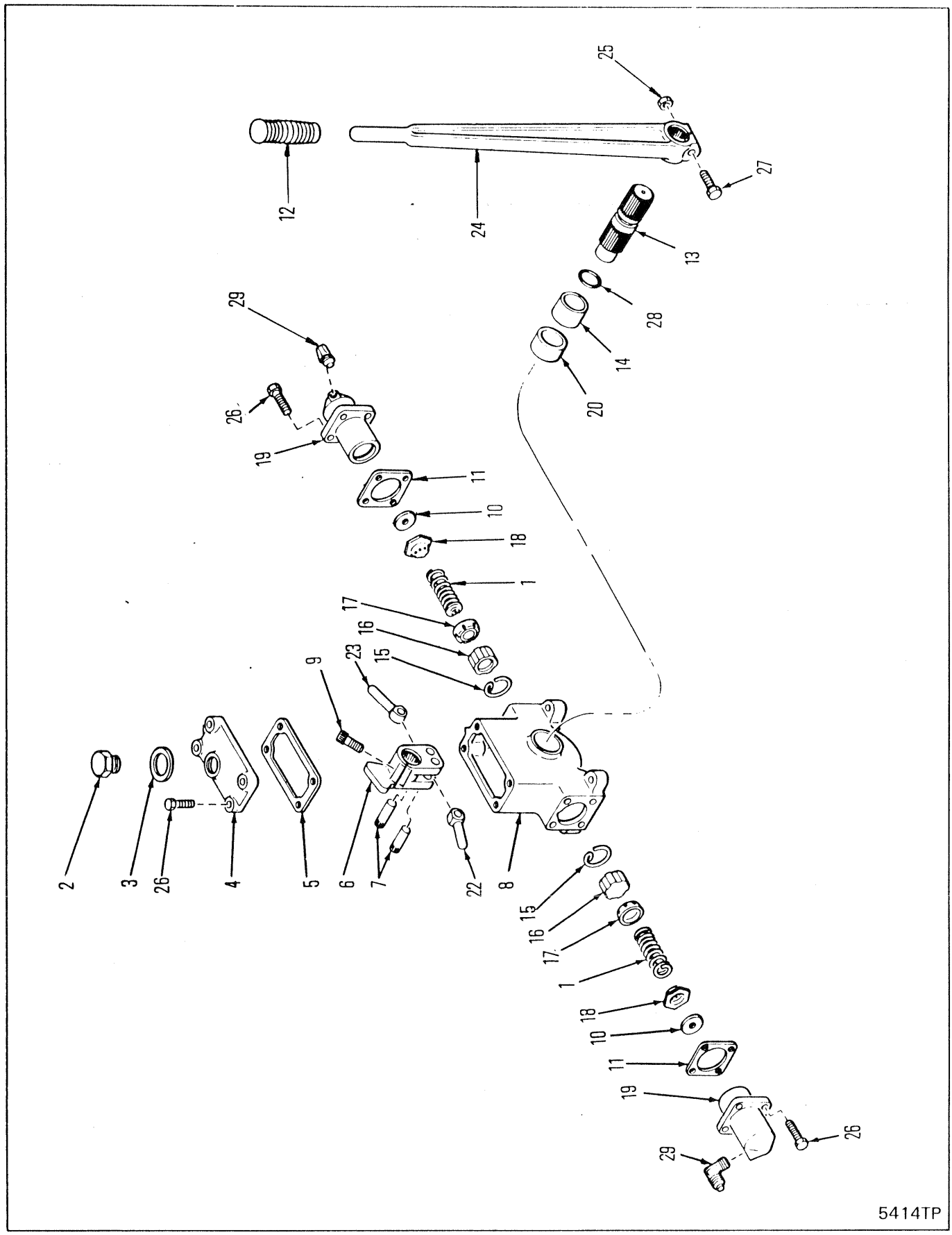
25
12
24
27
13
29
28
14
26
20
19
11
10
18
1
17
16
23
15
9
2
3
26
4
5
6
7
22
8
15
16
17
1
18
10
11
19
26
29
5414TP

# WINCH MASTER CONTROL UNIT-GEARMATIC
# UNITÉ DE CONTRÔLE PRINCIPAL DU TREUIL-GEARMATIC
# HAUPSTEUEREINHEIT DER WINDE-GEARMATIC
# UNIDADE DE CONTRÔLE MESTRE DO GUINCHO-GEARMATIC
# UNIDAD MANDO PRINCIPAL DEL GUINCHE-GEARMATIC

| No. | Part No. | Qty | Description | Description | Benennung | Descrição | Descripción |
|---|---|---|---|---|---|---|---|
| A | [1]1990147 | 2 | Cylinder | cylindre | Zylinder | cilindro | cilindro esclavo |
| B | 1990402 | 1 | Master control | command principal | Hauptkontr Einh | contr mestre | contr maestro |
| 1 | 1991923 | 2 | Spring | ressort | Feder | mola | resorte |
| 2 | 1990137 | 1 | Filler cap | bouchon de remplis | Fülldeckel | tampa de abastesc | tapa de llenadao |
| 3 | 1990138 | 1 | Washer | rondelle | Scheibe | arruela | arandela |
| 4 | 1990139 | 1 | Cover | couvercle | Deckel | tampa | tapa |
| 5 | 1990140 | 1 | Gasket | garniture | Dichtung | gaxeta | empaquetadura |
| 6 | 1990141 | 1 | Rocker arm | culbuteur | Schwingarm | braço do balancim | brazo de balancin |
| 7 | 1990142 | 2 | Pin | goupille | Stift | pino | pasador |
| 8 | 1990144 | 1 | Housing | botier | Gehuse | carcaça | carcasa |
| 9 | 1990145 | 1 | Bolt | boulon | Bolzen | parafuso | bulón |
| 10 | [3]§------- | 2 | Washer | rondelle | Scheibe | arruela | arandela |
| 11 | 1990148 | 2 | Gasket | garniture | Dichtung | gaxeta | empaquetadura |
| 12 | 1990149 | 1 | Grip | poignée | Griff | punho | mango |
| 13 | 1990152 | 1 | Shaft | arbre | Welle | ávore | árbol |
| 14 | 1990154 | 1 | Bushing | chemise | Buchse | bucha | buje |
| 15 | 1990197 | 2 | Lock ring | anneau blocage | Klemmring | anel trava | anillo seguridad |
| 16 | 1990198 | 2 | Piston | piston | Kolben | pistão | pistón |
| 17 | 1990199 | 2 | Cup | cuvette | Schale | capa | cubeta |
| 18 | [2]1990200 | 2 | Valve | soupape | Ventil | válvula | válvula |
| 19 | 1990201 | 2 | Cylinder | cylindre | Zylinder | cilindro | cilindro esclavo |
| 20 | 1990257 | 1 | Bushing | chemise | Buchse | bucha | buje |
| 21 | [4]†1991920 | 2 | Repair kit | trousse de reparation | Reparatursatz | conjunto de reparo | juego de reparación |
| 22 | 1990403 | 1 | Pushrod | tige de pousee | Stosser | tirante de empuxe | barra de empuje |
| 23 | 1990404 | 1 | Pushrod | tige de pousee | Stosser | tirante de empuxe | barra de empuje |
| 24 | 1991028 | 1 | Handle | manette | Handgriff | punho | manija |
| 25 | 2D0000006 | 1 | Nut | écrou | Mutter | porca | tuerca |
| 26 | 17C000514 | 12 | Bolt | boulon | Bolzen | parafuso | bulón |
| 27 | 18C000628 | 1 | Bolt | boulon | Bolzen | parafuso | bulón |
| 28 | 25K040024 | 1 | O-ring | joint torique | O Ring | anel-O | anillo-O |
| 29 | 83F000003 | 2 | Elbow | coude | Winkelrohr | cotovêlo | codo |
| 30 | [3]§--------- | 2 | Washer | rondelle | Scheibe | arruela | arandela |
| 31 | [4]†1991920 | 2 | Repair kit | trousse de reparation | Reparatursatz | conjunto de reparo | juego de reparación |

[1] Inc 1,10, 15➞19

[2] Inc 10

[3] See 18
[3] Voir 18
[3] Siehe 18
[3] Veja 18
[3] Véase 18

[4] Inc 1, 11 & 15➞18 and one (1) capsule of 1991922 Lubricating Fluid
[4] Y compris 1, 11 & 15➞18 et (1) bouchon de fluid lubrifiant 1991922
[4] Einschliesslich 1, 11 & 15➞18 sowie (1) Kapsel Schmierflüsigkeit 1991922
[4] Inclusive 1, 11 & 15➞18 e (1) cápsula de 1991922 Fluido lubrificante
[4] Incluir 1, 11 & 15➞18 y (1) cápsula de fluido lubricante 1991922

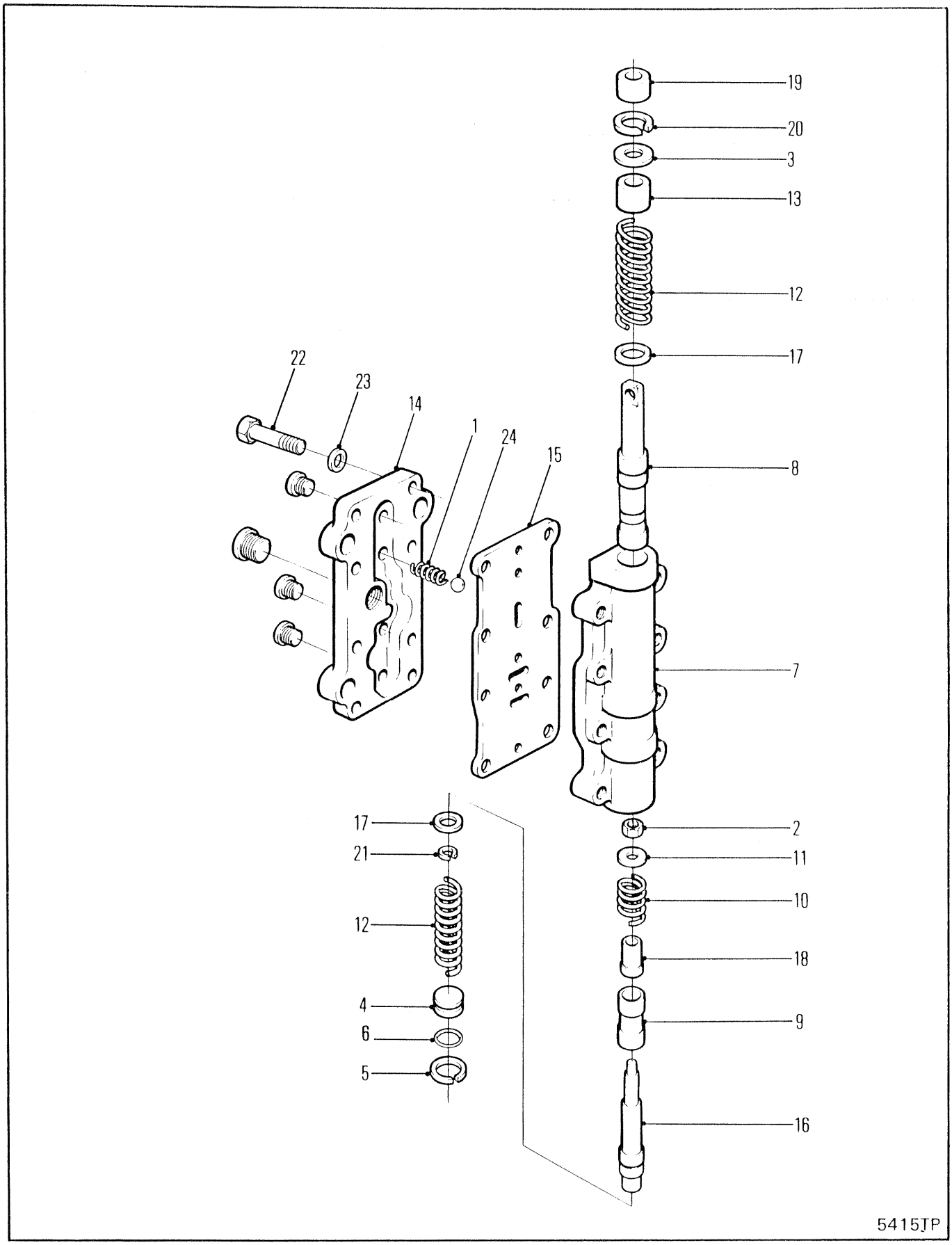
19
20
3
13
12
17
22
23
14
1
24
15
8
7
17
21
12
4
6
5
2
11
10
18
9
16
5415TP

# WINCH MASTER CONTROL UNIT-CLARK
# UNITÉ DE CONTRÔLE PRINCIPAL DU TREUIL-CLARK
# HAUPSTEUEREINHEIT DER WINDE-CLARK
# UNIDADE DE CONTRÔLE MESTRE DO GUINCHO-CLARK
# UNIDAD MANDO PRINCIPAL DEL GUINCHE-CLARK

| No. | Part No. | Qty | Description | Description | Benennung | Descrição | Descripción |
|---|---|---|---|---|---|---|---|
| A | [1]231200 | 1 | Control assy | ass de contrôle | Steuereinheit | conj de control | conj control |
| 1 | 202200 | 1 | Spring | ressort | Feder | mola | resorte |
| 2 | 216267 | 1 | Nut | écrou | Mutter | porca | tuerca |
| 3 | 217657 | 1 | Washer | rondelle | Scheibe | arruela | arandela |
| 4 | 222041 | 1 | Stop | butoir | Anschlag | batente | tope |
| 5 | 230965 | 1 | Snap ring | circlips | Sperring | anel de trava | anillo de retención |
| 6 | 25K040024 | 1 | O-ring | joint torique | O Ring | anel-O | anillo-O |
| 7 | 231258 | 1 | Body | carrosserie | Karosserie | carroçria | carrocería |
| 8 | 231312 | 1 | Spool valve | bobine soupape | Spulenventil | bobina válvula | carrete válvula |
| 9 | 231313 | 1 | Sleeve | manchon | Muffe | luva | manguito |
| 10 | 231314 | 1 | Spring | ressort | Feder | mola | resorte |
| 11 | 231315 | 1 | Washer | rondelle | Scheibe | arruela | arandela |
| 12 | 231319 | 2 | Spring | ressort | Feder | mola | resorte |
| 13 | 231320 | 1 | Spacer | entretoise | Distanzteil | espaçador | espaciador |
| 14 | 231321 | 1 | Cover | couvercle | Deckel | tampa | tapa |
| 15 | 231322 | 1 | Gasket | garniture | Dichtung | gaxeta | empaquetadura |
| 16 | 231386 | 1 | Spool | tiroir | Spule | carretel | carrete |
| 17 | 231387 | 2 | Retainer | arrêtoir | Halterung | retentor | retén |
| 18 | 231389 | 1 | Spacer | entretoise | Distanzteil | espaçador | espaciador |
| 19 | 234651 | 1 | Seal | joint étanchéité | Dichtung | vedador | sello |
| 20 | 664140 | 1 | Snap ring | circlips | Sperring | anel de trava | anillo de retención |
| 21 | 784433 | 1 | Snap ring | circlips | Sperring | anel de trava | anillo de retención |
| 22 | 1C000616 | 8 | Bolt | boulon | Bolzen | parafuso | bulón |
| 23 | 4E000006 | 8 | Lockwasher | rondelle frein | Sicherungsscheibe | arruela de pressão | arandela seguridad |
| 24 | 10J000012 | 1 | Ball | bille | Kugel | esfera | bola |

[1] Inc 1→24

666CUM 500E-101-CAC→500G-9999-CAC
666GM 513E-101-CAC→513G-9999-CAC

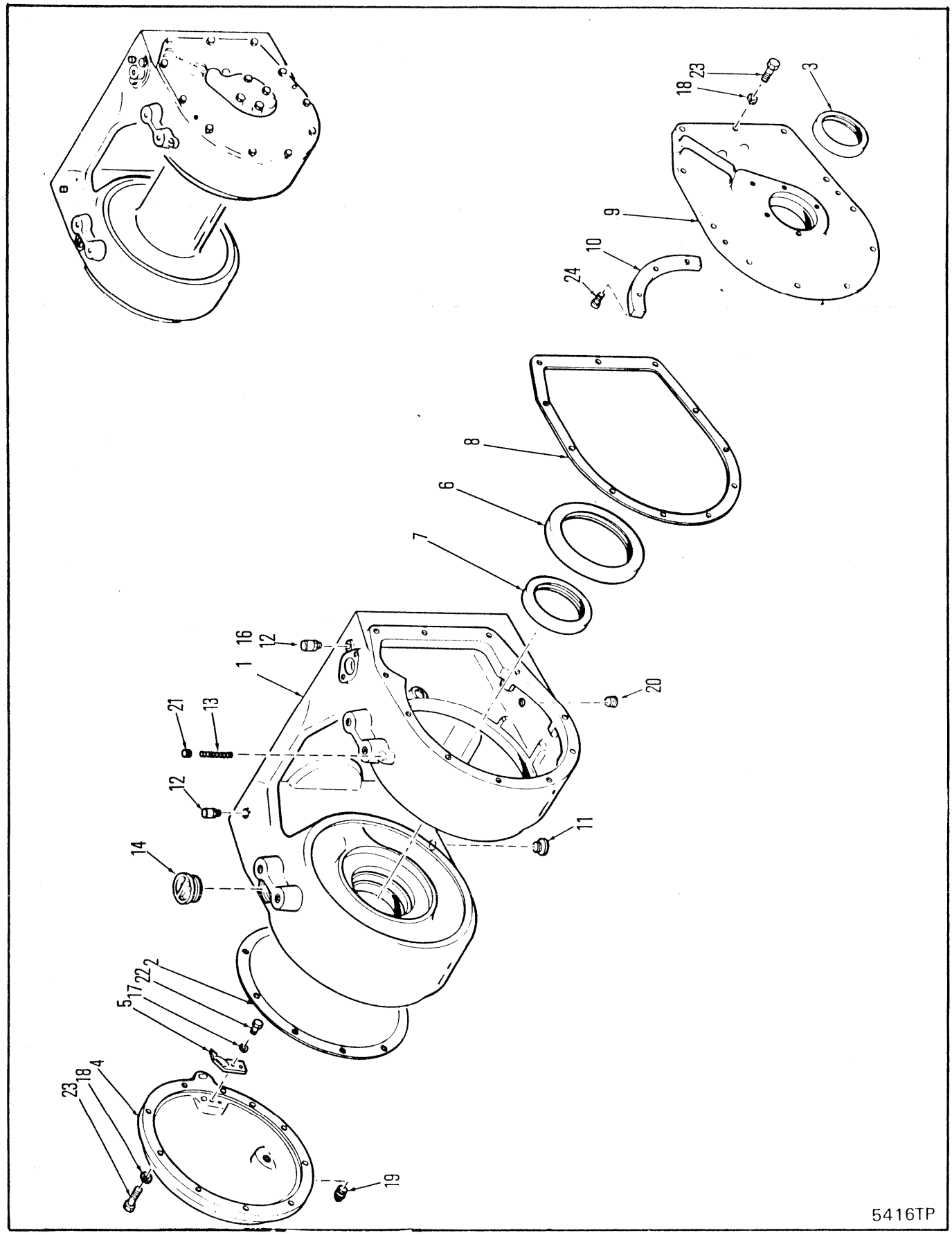
18
23
3
9
10
24
8
6
7
16
12
1
20
21
13
12
11
14
2
22
17
5
4
18
23
19
5416TP

# WINCH HOUSING ASSEMBLY-GEARMATIC 19
# ENSEMBLE D'ENCASTREMENT DU TREUIL-GEARMATIC 19
# WINDENGELHÄUSE-BAUGRUPPE-GEARMATIC 19
# CONJUNTO CARAÇA DO GUINCHO-GEARMATIC 19
# CONJUNTO ENVOLTURA DEL GUINCHE-GEARMATIC 19

| No. | Part No. | Qty | Description | Description | Benennung | Descrição | Descripción |
|---|---|---|---|---|---|---|---|
| 1 | **1990001** | 1 | Housing | botier | Gehuse | carcaça | carcasa |
| 2 | **1990010** | 1 | Gasket | garniture | Dichtung | gaxeta | empaquetadura |
| 3 | **1990011** | 1 | Seal | joint étanchéité | Dichtung | vedador | sello |
| 4 | **1990019** | 1 | Cover | couvercle | Deckel | tampa | tapa |
| 5 | **1990022** | 1 | Wiper | racleur | Wischer | limpador | limpiador |
| 6 | **1990023** | 1 | Seal | joint étanchéité | Dichtung | vedador | sello |
| 7 | **1990024** | 1 | Seal | joint étanchéité | Dichtung | vedador | sello |
| 8 | **1990034** | 1 | Gasket | garniture | Dichtung | gaxeta | empaquetadura |
| 9 | **1990037** | 1 | Cover | couvercle | Deckel | tampa | tapa |
| 10 | **1990054** | 1 | Ring | anneau | Ring | anel | anillo |
| 11 | **1990061** | 1 | Plug | bouchon | Stopfen | bujão | tapón |
| 12 | **1990081** | 2 | Vent | prise dair | 5mXoffnung | respiradouro | aireador |
| 13 | **1990232** | 1 | Spring | ressort | Feder | mola | resorte |
| 14 | **1990255** | 1 | Plug | bouchon | Stopfen | bujão | tapón |
| 15 | [1]†**1990434** | 1 | Plug | bouchon | Stopfen | bujão | tapón |
| 16 | [1]†**1990435** | 1 | Plug | bouchon | Stopfen | bujão | tapón |
| 17 | **4E000005** | 2 | Lockwasher | rondelle frein | Sicherungsscheibe | arruela de pressão | arandela seguridad |
| 18 | **4E000008** | 21 | Lockwasher | rondelle frein | Sicherungsscheibe | arruela de pressão | arandela seguridad |
| 19 | **10F000008** | 1 | Plug | bouchon | Stopfen | bujão | tapón |
| 20 | **11F000008** | 1 | Plug | bouchon | Stopfen | bujão | tapón |
| 21 | **15G000707** | 1 | Set screw | vis à pointe | Gewindestift | parafuso fixador | tornillo reten |
| 22 | **17C000510** | 2 | Bolt | boulon | Bolzen | parafuso | bulón |
| 23 | **17C000820** | 21 | Bolt | boulon | Bolzen | parafuso | bulón |
| 24 | **73G000612** | 3 | Bolt | boulon | Bolzen | parafuso | bulón |

[1] □Gearmatic S.N.19-5155➡Ref R.S.G.-63

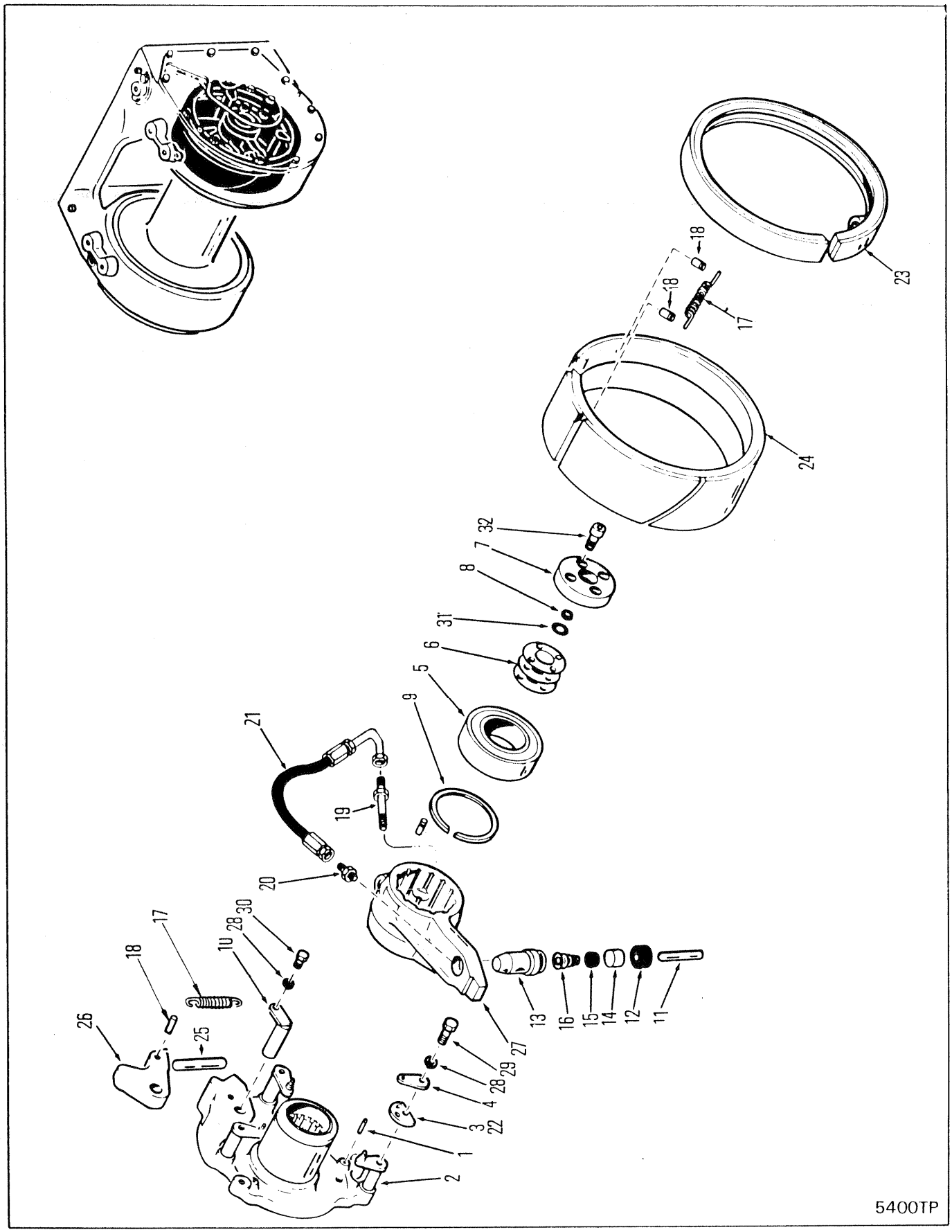
5400TP

# WINCH CLUTCH ASSEMBLY-GEARMATIC-19
# ENSEMBLE D'EMBRAYAGE DU TREUIL-GEARMATIC-19
# WINDENKUPPLUNGSBAUGRUPPE-GEARMATIC-19
# CONJUNTO EMBREAGEM DO GUINCHO-GEARMATIC-19
# CONJUNTO EMBRAGUE DEL GUINCHE-GEARMATIC-19

| No. | Part No. | Qty | Description | Description | Benennung | Descrição | Descripción |
|---|---|---|---|---|---|---|---|
| 1 | 1990028 | 3 | Pin | goupille | Stift | pino | pasador |
| 2 | 1990029 | 1 | Hub | moyeu | Nabe | cubo | cubo |
| 3 | 1990035 | 6 | Cam | came | Nocke | came | leva |
| 4 | 1990036 | 6 | Lockplate | plaque darrêt | Schlossblech | chapa retentora | chapa seguridad |
| 5 | 1990039 | 1 | Bearing | palier | Lager | mancal | cojinete |
| 6 | 1990040 | 1 | Shim set | ensemble de la cale | Beilegesatz | estojo de calços | conj cua |
| 7 | 1990041 | 1 | Cap | chapeau | Kappe | tampa | tapa |
| 8 | 1990044 | 1 | U-Seal | joint en-U | Dichtung-U | vedador-U | sello en-U |
| 9 | 1990049 | 1 | Snap ring | circlips | Sperring | anel de trava | anillo de retención |
| 10 | 1990051 | 1 | Pin | goupille | Stift | pino | pasador |
| 11 | 1990063 | 1 | Push rod | tige de pousee | Stosser | tirante de empuxe | barra de empuje |
| 12 | 1990064 | 1 | Boot | capuchon | Kappe | capuz | capuchón |
| 13 | 1990065 | 2 | Cylinder | cylindre | Zylinder | cilindro | cilindro esclavo |
| 14 | 1990066 | 1 | Piston | piston | Kolben | pistão | pistón |
| 15 | 1990067 | 1 | U-Cup | couvercle-U | U-Schale | acopl-U | taza-U |
| 16 | 1990068 | 1 | Spring | ressort | Feder | mola | resorte |
| 17 | [3]1990246 | 2 | Spring | ressort | Feder | mola | resorte |
| 18 | [3]1990247 | 4 | Pin | goupille | Stift | pino | pasador |
| 19 | [1]1990471 | 1 | Fitting | ajustage | Verbindung | ajuste | accesorio |
| 20 | [1]1990472 | 1 | Connector | raccord | Verbindungsstück | ligador | conector |
| 21 | [1]1990474 | 1 | Hose | tuyau flexible | Schlauch | mangueira | manguera |
| 22 | [2]1990499 | 6 | Cam | came | Nocke | came | leva |
| 23 | [2]1990506 | 1 | Clutch band | bande dembrayage | Kupplungsband | banda da embreagem | banda embreagem |
| 24 | [2]1990507 | 1 | Clutch band | bande dembrayage | Kupplungsband | banda da embreagem | banda embreagem |
| 25 | 1990634 | 1 | Push rod | tige de pousee | Stosser | tirante de empuxe | barra de empuje |
| 26 | 1991868 | 1 | Arm lever | levier | Armhebel | braço alavanca | brazo palanca |
| 27 | 1991869 | 1 | Clutch lever | levier dembrayage | Kupplungshebel | alavanca de embr | palanquita embrague |
| 28 | 4E0000006 | 7 | Lockwasher | rondelle frein | Sicherungsscheibe | arruela de pressão | arandela seguridad |
| 29 | 17C000616 | 6 | Bolt | boulon | Bolzen | parafuso | bulón |
| 30 | 18C000608 | 1 | Bolt | boulon | Bolzen | parafuso | bulón |
| 31 | 25K030026 | 1 | O-ring | joint torique | O Ring | anel-O | anillo-O |
| 32 | 74G000620 | 4 | Bolt | boulon | Bolzen | parafuso | bulón |

[1] Ref RSG 68 for installation
[1] Ref RSG 68 pour installation
[1] Ref RSG 68 für Einbau
[1] Ref RSG 68 para instalaço
[1] Ref RSG 68 para instalac

[2] When replacing item 23 & 24 item 3 must be replaced with 22. Ref RSG 78 for replacement
[2] Lors due remplacement de l'article 23 & 24 l'article 3 il doit être remplacé par l'article 22.
[2] Bei Austausch von Pos. 23 & 24, muss Pos 3 durch 22 ersetzt werden. Ref RSG 78 zwecks Ersatz
[2] Ao substituir itens 23 e 24 por diante, item 3 deve ser substtuido pelo 22. Ref a RSG 78 para substituição
[2] Al reemplazar articulo 23 & 24, articulo 3 debe reemplazarse por 22. Ref RSG 78 para reemplazo

[3] Ref RSG 241 for installation.
[3] Ref RSG 241 pour installation
[3] Ref RSG 241 für Einbau
[3] Ref RSG 241 para instalação
[3] Ref RSG 241 para instalac

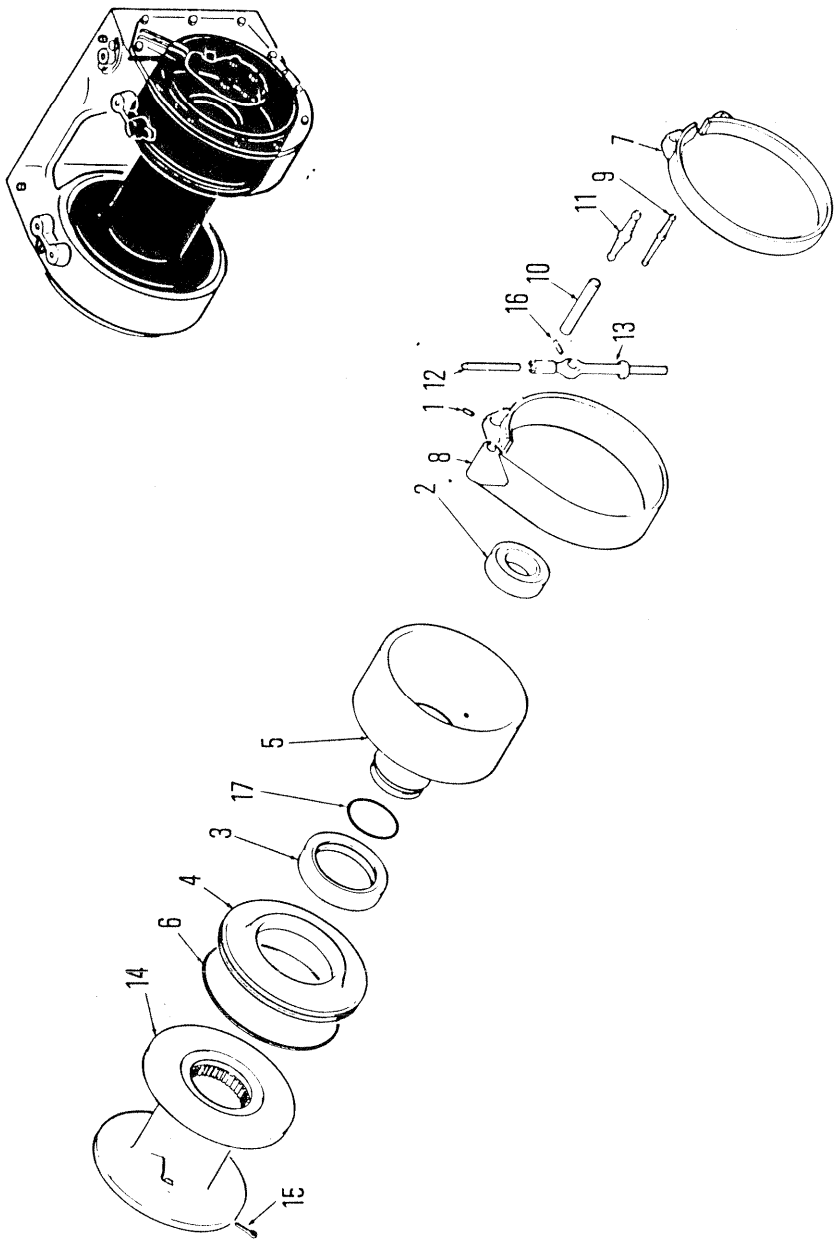


5418TP

# WINCH CABLE DRUM & BRAKE BANDS-GEARMATIC-19
# TAMBOUR DE CÂBLE ET BANDE DE FREIN DU TREUIL-GEARMATIC-19
# SEILTROMMEL DER WINDE UND BREMSBÄNDER-GEARMATIC-19
# TAMBOR DE CABOS E CINTA DE FREIO DO GUINCHO-GEARMATIC-19
# GUINCHOE - TAMBOR DE CABLES Y BANDA DE FRENOS-GEARMATIC-19

| No. | Part No. | Qty | Description | Description | Benennung | Descrição | Descripción |
|---|---|---|---|---|---|---|---|
| 1 | **209968** | 1 | Lockpin | goupille de blocage | Sperrstift | pino de trava | pasador de seguridad |
| 2 | **661671** | 1 | Bearing | palier | Lager | mancal | cojinete |
| 3 | **1990026** | 1 | Seal | joint étanchéité | Dichtung | vedador | sello |
| 4 | **1990027** | 1 | Housing | botier | Gehuse | carcaça | carcasa |
| 5 | **1990030** | 1 | Drum | tambour | Trommel | tambor | tambor |
| 6 | **1990031** | 1 | O-ring | joint torique | O Ring | anel-O | anillo-O |
| 7 | **1990055** | 1 | Band | bande | Band | banda | banda |
| 8 | **1990056** | 1 | Band | bande | Band | banda | banda |
| 9 | **1990057** | 1 | Lever | levier | Hebel | alavanca | palanca |
| 10 | **1990070** | 1 | Pin | goupille | Stift | pino | pasador |
| 11 | **1990071** | 1 | Lever | levier | Hebel | alavanca | palanca |
| 12 | **1990080** | 1 | Push rod | tige de pousee | Stosser | tirante de empuxe | barra de empuje |
| 13 | **1990253** | 1 | Block | bloc | Block | bloco | bloque |
| 14 | **1990430** | 1 | Drum | tambour | Trommel | tambor | tambor |
| 15 | **1F0000436** | 1 | Cotter pin | goupille fendue | Splint | contrapino | chaveta dos patos |
| 16 | **14J001220** | 1 | Pin | goupille | Stift | pino | pasador |
| 17 | **25K040520** | 1 | O-ring | joint torique | O Ring | anel-O | anillo-O |

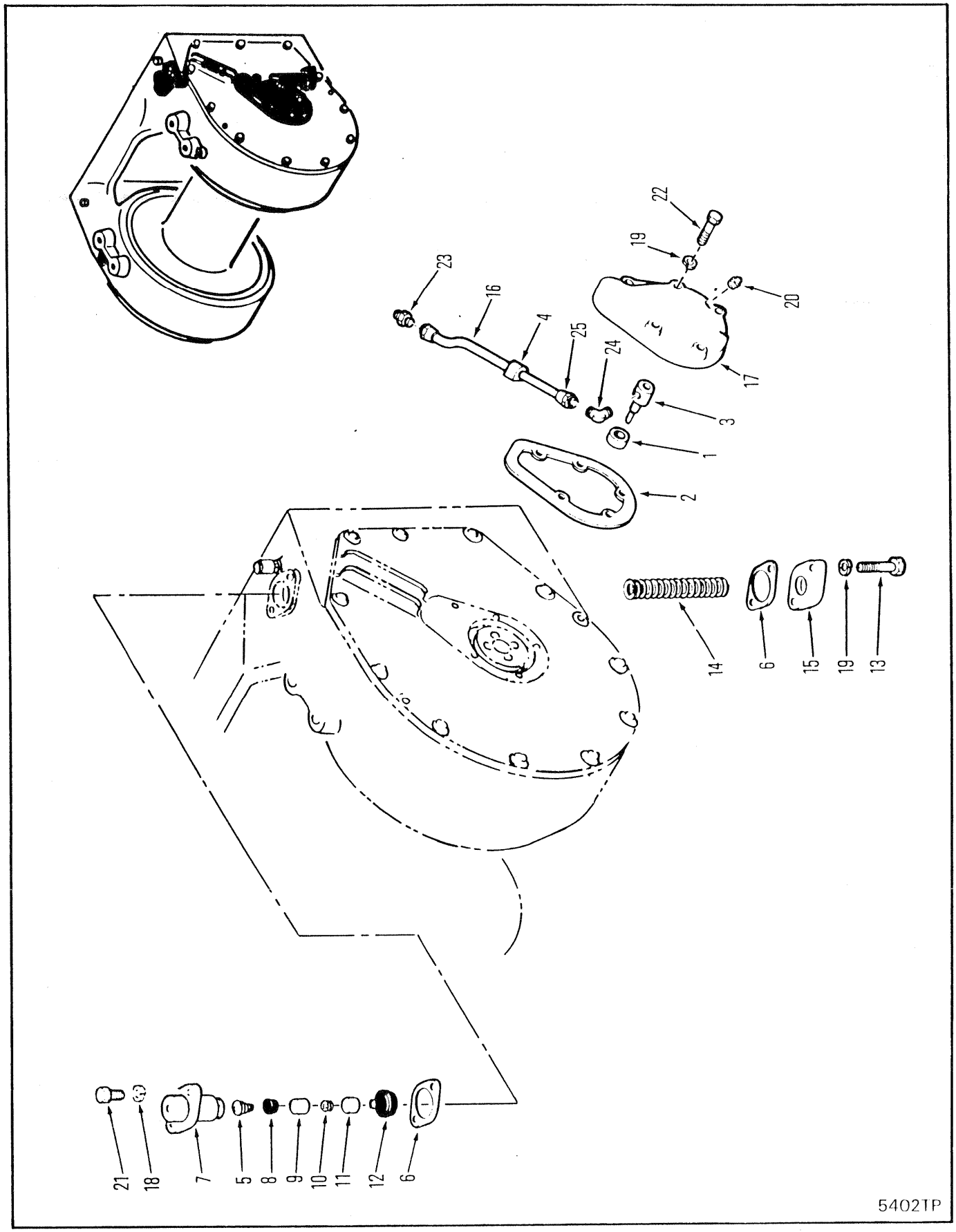
22
19
23
16
4
25
24
20
17
3
1
2
14
6
15
19
13
21
18
7
5
8
9
10
11
12
6
5402TP

# WINCH BRAKE CYLINDER ASSEMBLY-GEARMATIC-19
# ENSEMBLE DE CYLINDRE À FREIN DU TREUIL-GEARMATIC-19
# BREMSZYLINDER-BAUGRUPPE DER WINDE-GEARMATIC-19
# CONJUNTO CILINDRO DE FREIO DO GUINCHO-GEARMATIC-19
# GUINCHE - CONJUNTO CILINDRO DE FRENO-GEARMATIC-19

| No. | Part No. | Qty | Description | Description | Benennung | Descrição | Descripción |
|---|---|---|---|---|---|---|---|
| A | [1]1990047 | 1 | Tube assy | assemblage de tube | Rohreinheit | conjunto de tubos | conjunto del tubo |
| B | [2]1990096 | 1 | Cylinder assy | ens cylindre | Zylinderheit | conj de cilindro | conj de cilindro |
| 1 | 1309108 | 1 | Bearing | palier | Lager | mancal | cojinete |
| 2 | 1990038 | 1 | Gasket | garniture | Dichtung | gaxeta | empaquetadura |
| 3 | 1990045 | 1 | Tube | tube | Rohr | tubo | tubo |
| 4 | §------- | 1 | Grommet | oeillet | Augenring | ilhó | arandela pasacable |
| 5 | 1990068 | 1 | Spring | ressort | Feder | mola | resorte |
| 6 | 1990073 | 2 | Gasket | garniture | Dichtung | gaxeta | empaquetadura |
| 7 | 1990074 | 1 | Brake cylinder | cylindre de frein | Bremszylinder | cilindro do freio | cilindro de freno |
| 8 | 1990076 | 1 | U-Cup | couvercle-U | U-Schale | acopl-U | taza-U |
| 9 | 1990077 | 1 | Piston | piston | Kolben | pistão | pistón |
| 10 | 1990078 | 1 | Spring | ressort | Feder | mola | resorte |
| 11 | 1990079 | 1 | Piston | piston | Kolben | pistão | pistón |
| 12 | 1990082 | 1 | Boot | capuchon | Kappe | capuz | capuchón |
| 13 | 1990085 | 2 | Bolt | boulon | Bolzen | parafuso | bulón |
| 14 | 1990087 | 1 | Spring | ressort | Feder | mola | resorte |
| 15 | 1990088 | 1 | Cap | chapeau | Kappe | tampa | tapa |
| 16 | ------- | 1 | Tube | tube | Rohr | tubo | tubo |
| 17 | 1990256 | 1 | Cap | chapeau | Kappe | tampa | tapa |
| 18 | 4E0000006 | 2 | Lockwasher | rondelle frein | Sicherungsscheibe | arruela de pressão | arandela seguridad |
| 19 | 4E0000007 | 7 | Lockwasher | rondelle frein | Sicherungsscheibe | arruela de pressão | arandela seguridad |
| 20 | 13F000002 | 1 | Plug | bouchon | Stopfen | bujão | tapón |
| 21 | 17C000616 | 2 | Bolt | boulon | Bolzen | parafuso | bulón |
| 22 | 17C000724 | 5 | Bolt | boulon | Bolzen | parafuso | bulón |
| 23 | 40F000003 | 1 | Adapter | adaptateur | Zwischenstück | adaptador | adaptador |
| 24 | 42F000003 | 1 | Elbow | coude | Winkelrohr | cotovêlo | codo |
| 25 | §--------- | 2 | Nut | écrou | Mutter | porca | tuerca |

[1] Inc 4,16 & 25

[2] Inc 5 & 7➡12

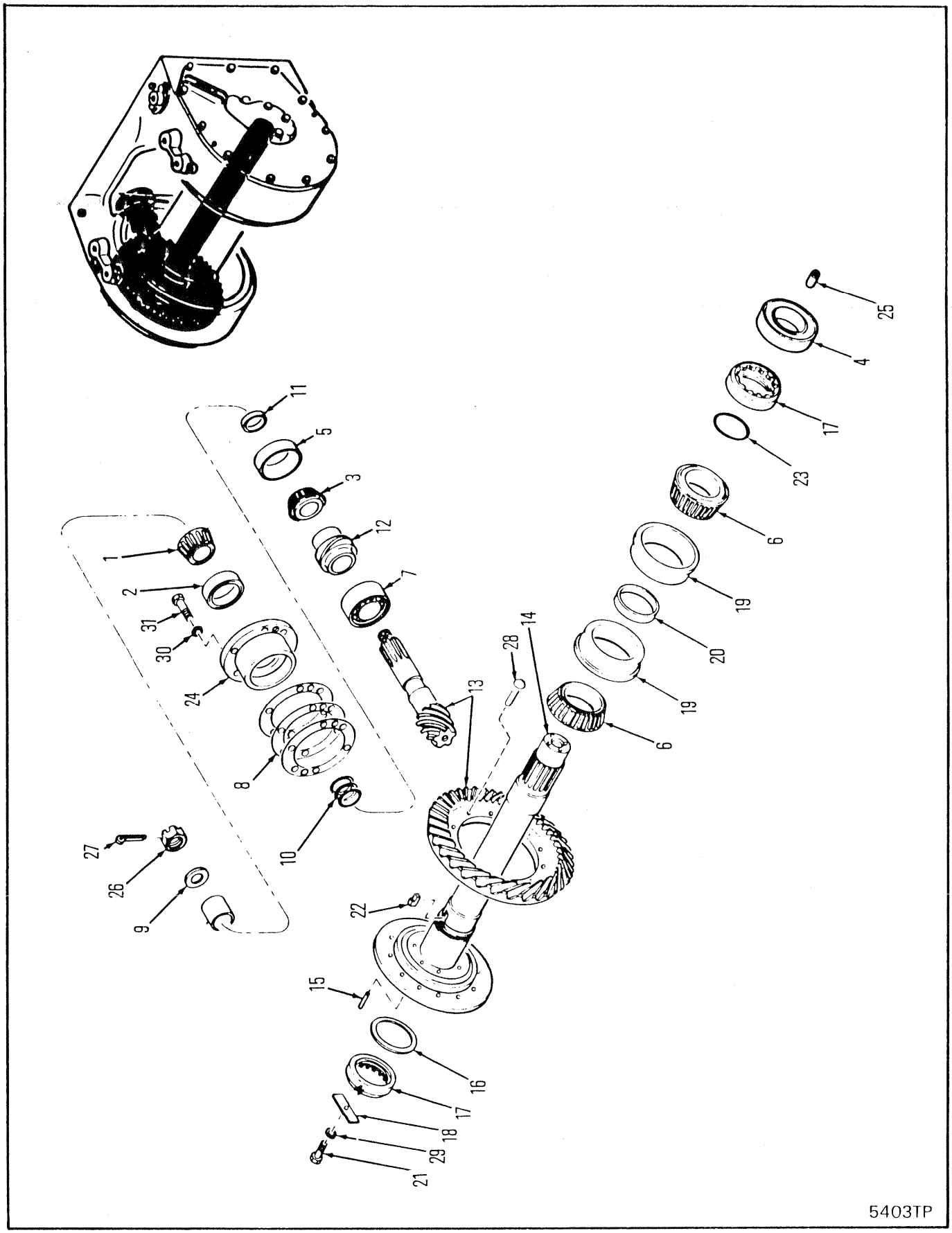
1
2
31
30
24
8
10
27
26
9
11
5
3
12
7
13
28
14
6
19
20
19
6
25
4
17
23
22
15
16
17
18
29
21
5403TP

# WINCH RING GEAR AND PINION ASSEMBLY-GEARMATIC-19
# ENSEMBLE D'ENGRENAGE DE LA COURONNE DU TREUIL ET DE PIGNON DU TREUIL-GEARMATIC-19
# ZAHNDRANZ UND RITZEL DER WINDE-GEARMATIC-19
# CONJUNTO CORÔA E PINHÃO DO GUINCHO-GEARMATIC-19
# GUINCHE - CONJUNTO CORONA Y PIÑÓN-GEARMATIC-19

| No. | Part No. | Qty | Description | Description | Benennung | Descrição | Descripción |
|---|---|---|---|---|---|---|---|
| A | [1]1990046 | 1 | Bearing | palier | Lager | mancal | cojinete |
| B | [2]1990099 | 1 | Pinion | pignon | Ritzel | pinhão | pion |
| 1 | 654047 | 1 | Cone | cône | Kegel | cone | cono |
| 2 | 654156 | 1 | Cup | cuvette | Schale | capa | cubeta |
| 3 | 658978 | 1 | Cone | cône | Kegel | cone | cono |
| 4 | 661671 | 1 | Bearing | palier | Lager | mancal | cojinete |
| 5 | 675257 | 1 | Cup | cuvette | Schale | capa | cubeta |
| 6 | 755557 | 2 | Cone | cône | Kegel | cone | cono |
| 7 | 799723 | 1 | Bearing | palier | Lager | mancal | cojinete |
| 8 | 1990002 | 1 | Shim set | ensemble de la cale | Beilegesatz | estojo de calços | conj cua |
| 9 | 1990003 | 1 | Washer | rondelle | Scheibe | arruela | arandela |
| 10 | 1990007 | 1 | Shim set | ensemble de la cale | Beilegesatz | estojo de calços | conj cua |
| 11 | 1990008 | 1 | Spacer | entretoise | Distanzteil | espaçador | espaciador |
| 12 | 1990009 | 1 | Sleeve | manchon | Muffe | luva | manguito |
| 13 | 1990012 | 1 | Ring | anneau | Ring | anel | anillo |
| 14 | 1990014 | 1 | Shaft | arbre | Welle | ávore | árbol |
| 15 | 1990015 | 6 | Pin | goupille | Stift | pino | pasador |
| 16 | 1990016 | 1 | Spacer | entretoise | Distanzteil | espaçador | espaciador |
| 17 | 1990017 | 2 | Nut | écrou | Mutter | porca | tuerca |
| 18 | 1990018 | 1 | Plate | plaque | Platte | placa | placa |
| 19 | 1990020 | 2 | Cup | cuvette | Schale | capa | cubeta |
| 20 | 1990021 | 1 | Spacer | entretoise | Distanzteil | espaçador | espaciador |
| 21 | 18C000612 | 1 | Screw | vis | Schraube | parafuso | tornillo |
| 22 | 1990060 | 1 | Key | clavette | Keil | chaveta | chaveta |
| 23 | 25K040312 | 1 | Cap | chapeau | Kappe | tampa | tapa |
| 24 | [3]1990254 | 1 | Housing | botier | Gehuse | carcaça | carcasa |
| 25 | 1990391 | 1 | Retainer | arrêtoir | Halterung | retentor | retén |
| 26 | 1991047 | 1 | Nut | écrou | Mutter | porca | tuerca |
| 27 | 1F0000436 | 1 | Pin | goupille | Stift | pino | pasador |
| 28 | 1H0000832 | 12 | Rivet | rivet | Niet | rebite | remache |
| 29 | 4E0000006 | 1 | Lockwasher | rondelle frein | Sicherungsscheibe | arruela de pressão | arandela seguridad |
| 30 | 4E0000010 | 6 | Lockwasher | rondelle frein | Sicherungsscheibe | arruela de pressão | arandela seguridad |
| 31 | 17C001028 | 6 | Bolt | boulon | Bolzen | parafuso | bulón |

[1] Inc 1→3, 5, 8, 10, 11 & 24

[2] Inc 13, 14 & 28

[3] Inc 2 & 5

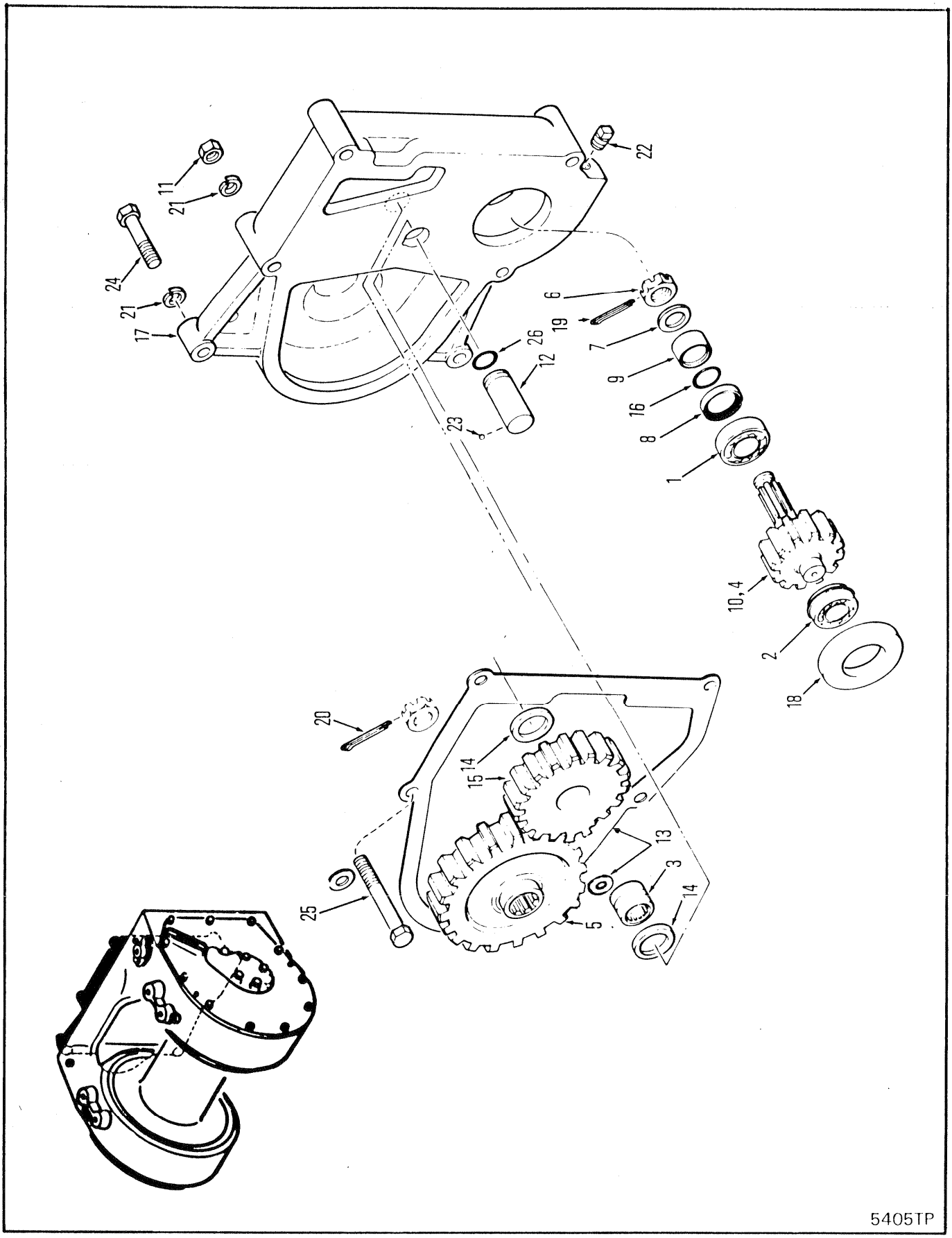
22
11
21
24
21
17
6
19
7
26
12
9
16
8
23
1
10,4
2
18
20
14
15
13
3
14
5
25
5405TP

# WINCH ADAPTER ASSEMBLY-GEARMATIC-19
# ENSEMBLE D'APTATEUR DU TREUIL-GEARMATIC-19
# ADAPTERGRUPPE DER WINDE-GEARMATIC-19
# CONJUNTO DE ADAPTADOR DO GUINCHO-GEARMATIC-19
# CONJUNTO ADAPTADOR DEL GUINCHE-GEARMATIC-19

| No. | Part No. | Qty | Description | Description | Benennung | Descrição | Descripción |
|---|---|---|---|---|---|---|---|
| A | [1]1990171 | 1 | Gear | engrenage | Zahnrad | engrenagem | engranaje |
| 1 | 710749 | 1 | Bearing | palier | Lager | mancal | cojinete |
| 2 | 731742 | 1 | Bearing | palier | Lager | mancal | cojinete |
| 3 | 763185 | 1 | Bearing | palier | Lager | mancal | cojinete |
| 4 | 1900215 | 1 | Yoke | chape | Joch | garfo | horqueta |
| 5 | 1990095 | 1 | Gear | engrenage | Zahnrad | engrenagem | engranaje |
| 6 | 1990159 | 1 | Nut | écrou | Mutter | porca | tuerca |
| 7 | 1990160 | 1 | Washer | rondelle | Scheibe | arruela | arandela |
| 8 | 1990161 | 1 | Seal | joint étanchéité | Dichtung | vedador | sello |
| 9 | 1990162 | 1 | Spacer | entretoise | Distanzteil | espaçador | espaciador |
| 10 | 1990164 | 1 | Shaft | arbre | Welle | ávore | árbol |
| 11 | 1990165 | 4 | Nut | écrou | Mutter | porca | tuerca |
| 12 | 1990167 | 1 | Pin | goupille | Stift | pino | pasador |
| 13 | 1990169 | 1 | Gasket | garniture | Dichtung | gaxeta | empaquetadura |
| 14 | 1990170 | 2 | Spacer | entretoise | Distanzteil | espaçador | espaciador |
| 15 | 1990171 | 1 | Gear | engrenage | Zahnrad | engrenagem | engranaje |
| 16 | 25K040116 | 1 | O-ring | joint torique | O Ring | anel-O | anillo-O |
| 17 | 1990260 | 1 | Housing | botier | Gehuse | carcaça | carcasa |
| 18 | 1990261 | 1 | Ring | anneau | Ring | anel | anillo |
| 19 | 1F0000424 | 1 | Pin | goupille | Stift | pino | pasador |
| 20 | 1F0000436 | 1 | Pin | goupille | Stift | pino | pasador |
| 21 | 4E0000012 | 6 | Lockwasher | rondelle frein | Sicherungsscheibe | arruela de pressão | arandela seguridad |
| 22 | 10F000008 | 1 | Plug | bouchon | Stopfen | bujão | tapón |
| 23 | 10J000008 | 1 | Key | clavette | Keil | chaveta | chaveta |
| 24 | 17C001248 | 2 | Bolt | boulon | Bolzen | parafuso | bulón |
| 25 | 18C001281 | 4 | Bolt | boulon | Bolzen | parafuso | bulón |
| 26 | 25K040112 | 1 | O-ring | joint torique | O Ring | anel-O | anillo-O |

[1] Inc 1➡26

666CUM 500E-101-CAC➡500E-9999-CAC
666GM 513E-101-CAC➡513G-9999-CAC

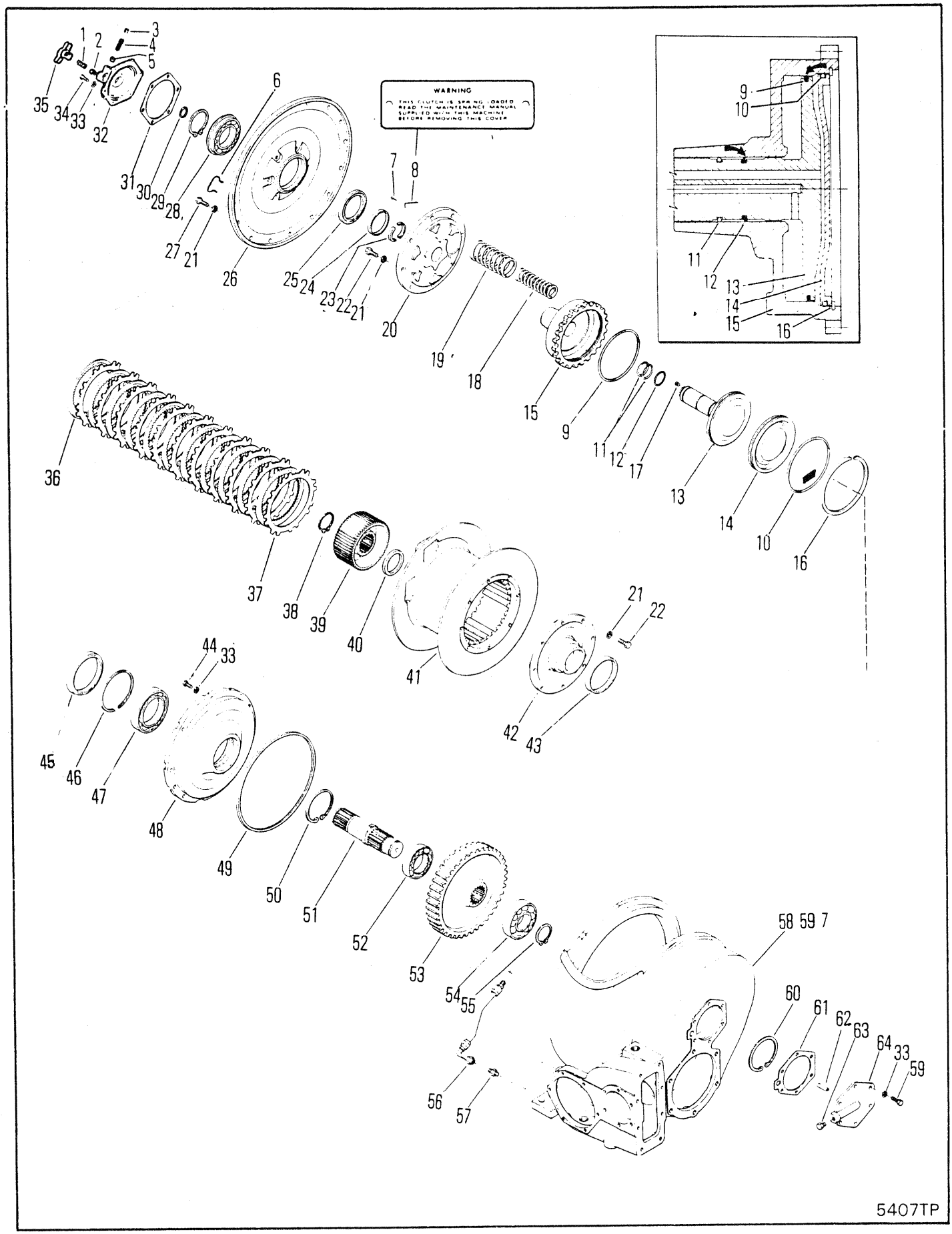
WARNING
5407TP

# WINCH,CABLE DRUM DRIVE SHAFT & CLUTCH W-300
# TREUIL,ARBRE D'ENTRAÎNEMENT DU TAMBOUR DE CÂBLE & EMBRAYAGE W-300
# WINDE,ANTRIEBSWELLE DER SEILTROMMEL & KUPPLUNG W-300
# GUINCHO,EIXO IMPULSOR DO TAMBOR DE CABOS & EMBREAGEM W-300
# GUINCHE,ARBOL INPULSOR DEL TAMBOR DE CABLES & EMBRAGUE W-300

| No. | Part No. | Qty | Description | Description | Benennung | Descrição | Descripción |
|---|---|---|---|---|---|---|---|
| A | [6]--------- | 1 | Winch assy | treuil ens | Winde vollst | guincho conj | guinche conj |
| 1 | **232903** | 1 | Spring | ressort | Feder | mola | resorte |
| 2 | **232904** | 1 | Button | bouton | Knopf | botão | botón |
| 3 | **16F000006** | 1 | Plug | bouchon | Stopfen | bujão | tapón |
| 4 | **201413** | 1 | Spring | ressort | Feder | mola | resorte |
| 5 | **232947** | 1 | Lock | serrure | Schloss | fechadura | cerradura |
| 6 | **222418** | 1 | Plug | bouchon | Stopfen | bujão | tapón |
| 7 | **207873** | 4 | Screw | vis | Schraube | parafuso | tornillo |
| 8 | **232338** | 1 | Tag | etiquette | Etikett | etiqueta | etiqueta |
| 9 | **231303** | 1 | Seal | joint étanchéité | Dichtung | vedador | sello |
| 10 | **25K040716** | 1 | O ring | joint torique | O ring | anel-O | anillo-O |
| 11 | **25K040200** | 2 | O ring | joint torique | O ring | anel-O | anillo-O |
| 12 | **231017** | 1 | Seal | joint étanchéité | Dichtung | vedador | sello |
| 13 | [3]**239216** | 1 | Shaft | arbre | Welle | ávore | árbol |
| 14 | **232240** | 1 | Plug | bouchon | Stopfen | bujão | tapón |
| 15 | **232239** | 1 | Piston | piston | Kolben | pistão | pistón |
| 16 | **232241** | 1 | Ring | anneau | Ring | anel | anillo |
| 17 | **231231** | 1 | Plug | bouchon | Stopfen | bujão | tapón |
| 18 | **231333** | 6 | Spring | ressort | Feder | mola | resorte |
| 19 | **231332** | 6 | Spring | ressort | Feder | mola | resorte |
| 20 | [4]**234597** | 1 | Drum support | support du tarnbour | Trommelstütze | suporte do tambor | soporte del tambour |
| 21 | **4E000008** | 31 | Lockwasher | rondelle frein | Sicherungsscheibe | arruela de pressão | arandela seguridad |
| 22 | **17C000824** | 8 | Bolt | boulon | Bolzen | parafuso | bulón |
| 23 | **231811** | 2 | Ring | anneau | Ring | anel | anillo |
| 24 | [5]§------ | 1 | Sleeve | manchon | Muffe | luva | manguito |
| 25 | **231336** | 1 | Seal | joint étanchéité | Dichtung | vedador | sello |
| 26 | **801767** | 1 | Cover | couvercle | Deckel | tampa | tapa |
| 27 | **1C000822** | 15 | Bolt | boulon | Bolzen | parafuso | bulón |
| 28 | **231338** | 1 | Bearing | palier | Lager | mancal | cojinete |
| 29 | **225313** | 1 | Ring | anneau | Ring | anel | anillo |
| 30 | **223084** | 1 | Ring | anneau | Ring | anel | anillo |
| 31 | **231308** | 1 | Gasket | garniture | Dichtung | gaxeta | empaquetadura |
| 32 | **232943** | 1 | Cap | chapeau | Kappe | tampa | tapa |
| 33 | **4E000006** | 20 | Lockwasher | rondelle frein | Sicherungsscheibe | arruela de pressão | arandela seguridad |
| 34 | **1C000618** | 6 | Bolt | boulon | Bolzen | parafuso | bulón |
| 35 | **232944** | 1 | Bolt | boulon | Bolzen | parafuso | bulón |
| 36 | **232628** | 11 | Disc inner | disque interieur | Scheibe innen | disco interior | disco interno |
| 37 | **232285** | 14 | Disc outer | disque extérieur | Scheibe, aussen | disco exterior | disco externo |
| 38 | **711161** | 1 | Snap ring | circlips | Sperring | anel de trava | anillo de retención |
| 39 | **231831** | 1 | Hub assy | moyeu ens | Nabe vollst | cubo conj | cubo conj |
| 40 | **234761** | 1 | Seal | joint étanchéité | Dichtung | vedador | sello |
| 41 | **231300** | 1 | Drum | tambour | Trommel | tambor | tambor |
| 42 | [2]**231495** | 1 | Support | support | Abstützung | suporte | soporte |
| 43 | **231843** | 1 | Sleeve | manchon | Muffe | luva | manguito |
| 44 | **1C000616** | 8 | Bolt | boulon | Bolzen | parafuso | bulón |
| 45 | **231842** | 1 | Seal | joint étanchéité | Dichtung | vedador | sello |

[1] Inc 43

[2] Inc 16

[3] Inc 12

[4] Inc 24

[5] See 20
[5] Voir 20
[5] Siehe 20
[5] Veja 20
[5] Véase 20

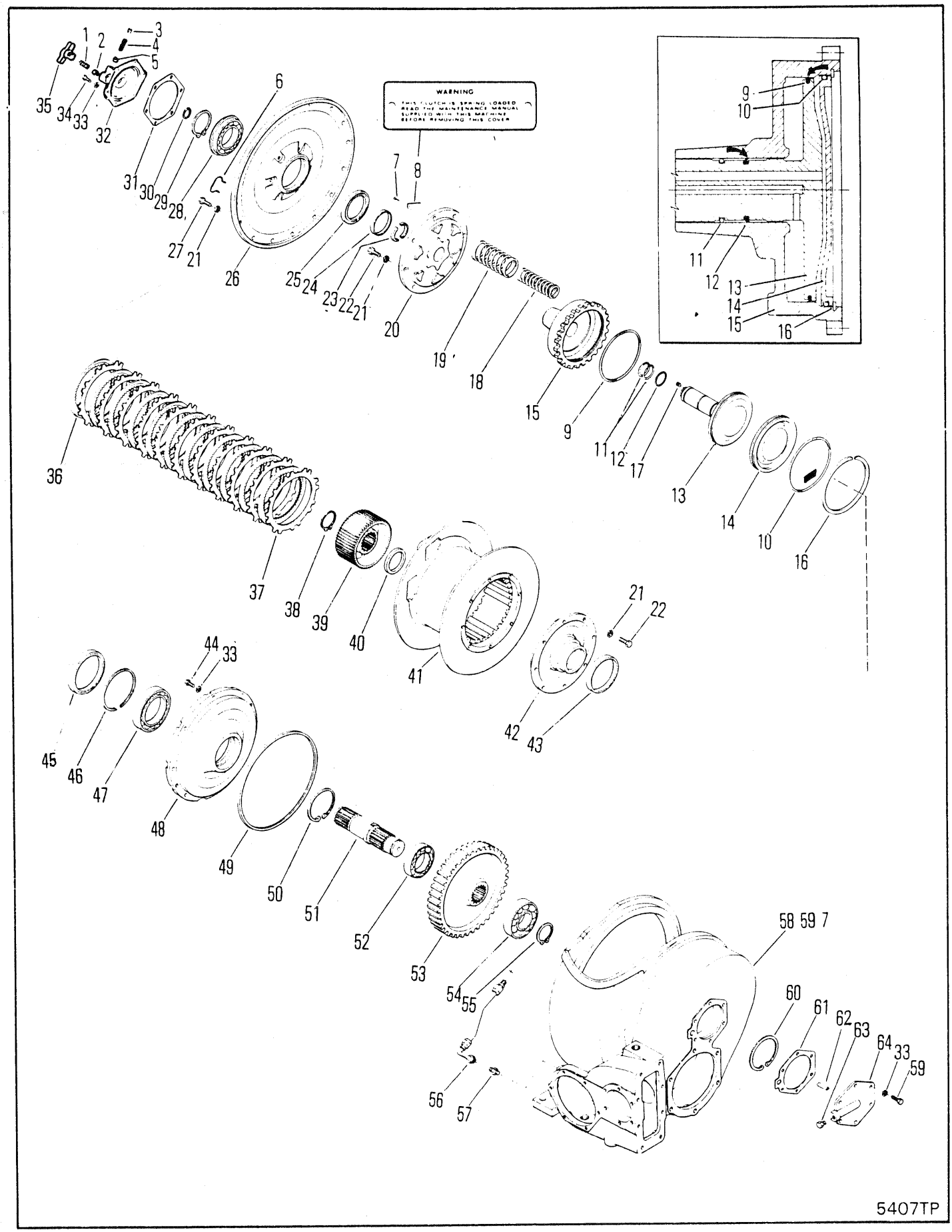
WARNING
5407TP

## WINCH,CABLE DRUM DRIVE SHAFT & CLUTCH W-300
## TREUIL,ARBRE D'ENTRAÎNEMENT DU TAMBOUR DE CÂBLE & EMBRAYAGE W-300
## WINDE,ANTRIEBSWELLE DER SEILTROMMEL & KUPPLUNG W-300
## GUINCHO,EIXO IMPULSOR DO TAMBOR DE CABOS & EMBREAGEM W-300
## GUINCHE,ARBOL INPULSOR DEL TAMBOR DE CABLES & EMBRAGUE W-300

| No. | Part No. | Qty | Description | Description | Benennung | Descrição | Descripción |
|---|---|---|---|---|---|---|---|
| 46 | **217693** | 1 | Ring | anneau | Ring | anel | anillo |
| 47 | **225800** | 1 | Bearing | palier | Lager | mancal | cojinete |
| 48 | [1]**231294** | 1 | Support | support | Abstützung | suporte | soporte |
| 49 | **218777** | 1 | O-ring | joint torique | O Ring | anel-O | anillo-O |
| 50 | **952160** | 1 | Snap ring | circlips | Sperring | anel de trava | anillo de retención |
| 51 | **231290** | 1 | Shaft | arbre | Welle | ávore | árbol |
| 52 | **774623** | 1 | Bearing | palier | Lager | mancal | cojinete |
| 53 | **231289** | 1 | Gear | engrenage | Zahnrad | engrenagem | engranaje |
| 54 | **225793** | 1 | Bearing | palier | Lager | mancal | cojinete |
| 55 | **230067** | 1 | Ring | anneau | Ring | anel | anillo |
| 56 | **231399** | 1 | Hose | tuyau flexible | Schlauch | mangueira | manguera |
| 57 | **38F000009** | 1 | Adapter | adaptateur | Zwischenstück | adaptador | adaptador |
| 58 | **232950** | 1 | Case winch | boitier treuil | Windengehäuse | caixa guincho | caja guinche |
| 59 | **1C000620** | 6 | Bolt | boulon | Bolzen | parafuso | bulón |
| 60 | **711178** | 1 | Ring | anneau | Ring | anel | anillo |
| 61 | **231293** | 1 | Gasket | garniture | Dichtung | gaxeta | empaquetadura |
| 62 | **222031** | 1 | Tube | tube | Rohr | tubo | tubo |
| 63 | **40K000002** | 1 | Plug | bouchon | Stopfen | bujão | tapón |
| 64 | **231292** | 1 | Cover | couvercle | Deckel | tampa | tapa |

[1] Inc 43

[2] Inc 16

[3] Inc 12

[4] Inc 24

[5] See 20
[5] Voir 20
[5] Siehe 20
[5] Veja 20
[5] Véase 20

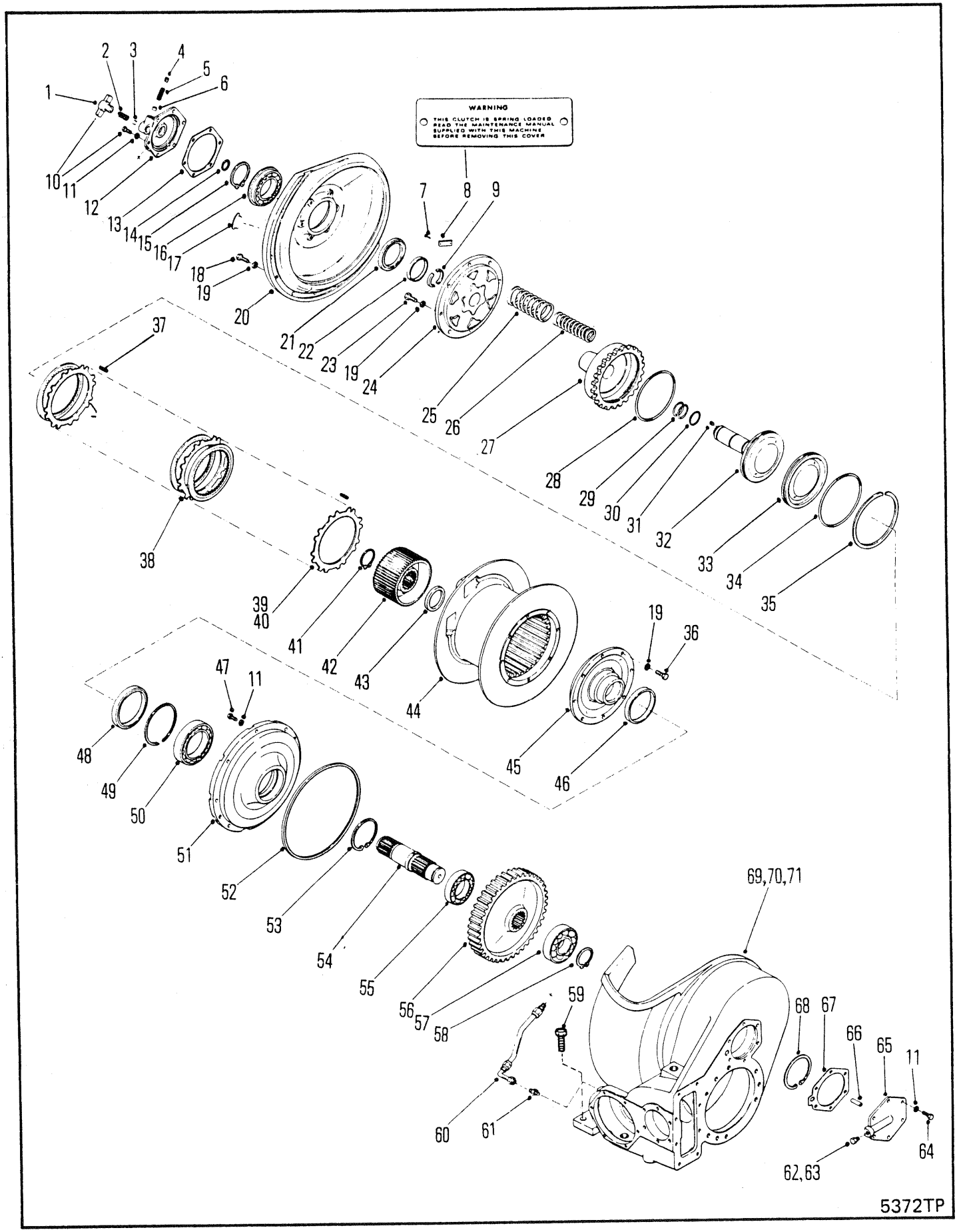
WARNING
THIS CLUTCH IS SPRING LOADED.
READ THE MAINTENANCE MANUAL
SUPPLIED WITH THIS MACHINE
BEFORE REMOVING THIS COVER
1
2
3
4
5
6
7
8
9
10
11
12
13
14
15
16
17
18
19
20
21
22
23
19
24
25
26
27
28
29
30
31
32
33
34
35
36
37
38
39
40
41
42
43
44
19
45
46
47
11
48
49
50
51
52
53
54
55
56
57
58
59
60
61
69,70,71
68
67
66
65
11
64
62,63
5372TP

# WINCH,CABLE DRUM DRIVE SHAFT & CLUTCH W311-1
# TREUIL,ARBRE D'ENTRAÎNEMENT DU TAMBOUR DE CÂBLE & EMBRAYAGE W311-1
# WINDE,ANTRIEBSWELLE DER SEILTROMMEL & KUPPLUNG W311-1
# GUINCHO,EIXO IMPULSOR DO TAMBOR DE CABOS & EMBREAGEM W311-1
# GUINCHE,ARBOL INPULSOR DEL TAMBOR DE CABLES & EMBRAGUE W311-1

| No. | Part No. | Qty | Description | Description | Benennung | Descrição | Descripción |
|---|---|---|---|---|---|---|---|
| A | [3]284250 | 1 | Winch assy | treuil ens | Winde vollst | guincho conj | guinche conj |
| 1 | 232944 | 1 | Bolt | boulon | Bolzen | parafuso | bulón |
| 2 | 232903 | 1 | Spring | ressort | Feder | mola | resorte |
| 3 | 232904 | 1 | Button | bouton | Knopf | botão | botón |
| 4 | 16F000006 | 1 | Plug | bouchon | Stopfen | bujão | tapón |
| 5 | 201413 | 1 | Spring | ressort | Feder | mola | resorte |
| 6 | 232947 | 1 | Lock | serrure | Schloss | fechadura | cerradura |
| 7 | 207873 | 1 | Screw | vis | Schraube | parafuso | tornillo |
| 8 | 232338 | 1 | Tag | etiquette | Etikett | etiqueta | etiqueta |
| 9 | 231811 | 2 | Ring | anneau | Ring | anel | anillo |
| 10 | 1C000618 | 6 | Bolt | boulon | Bolzen | parafuso | bulón |
| 11 | 4E000006 | 20 | Lockwasher | rondelle frein | Sicherungsscheibe | arruela de pressão | arandela seguridad |
| 12 | 232943 | 1 | Cap | chapeau | Kappe | tampa | tapa |
| 13 | 231308 | 1 | Gasket | garniture | Dichtung | gaxeta | empaquetadura |
| 14 | 223084 | 1 | Ring | anneau | Ring | anel | anillo |
| 15 | 225313 | 1 | Ring | anneau | Ring | anel | anillo |
| 16 | 231338 | 1 | Bearing | palier | Lager | mancal | cojinete |
| 17 | 222418 | 1 | Plug | bouchon | Stopfen | bujão | tapón |
| 18 | 1C000822 | 9 | Bolt | boulon | Bolzen | parafuso | bulón |
| 19 | 4E000008 | 25 | Lockwasher | rondelle frein | Sicherungsscheibe | arruela de pressão | arandela seguridad |
| 20 | 234001 | 1 | Cover | couvercle | Deckel | tampa | tapa |
| 21 | 231336 | 1 | Seal | joint étanchéité | Dichtung | vedador | sello |
| 22 | [4]§------ | 1 | Sleeve | manchon | Muffe | luva | manguito |
| 23 | 17C000824 | 16 | Bolt | boulon | Bolzen | parafuso | bulón |
| 24 | [5]234597 | 1 | Drum support | support du tarnbour | Trommelstütze | suporte do tambor | soporte del tambour |
| 25 | 231332 | 6 | Spring | ressort | Feder | mola | resorte |
| 26 | 231333 | 6 | Spring | ressort | Feder | mola | resorte |
| 27 | 232239 | 1 | Piston | piston | Kolben | pistão | pistón |
| 28 | 231303 | 1 | Seal | joint étanchéité | Dichtung | vedador | sello |
| 29 | 25K040200 | 2 | O ring | joint torique | O ring | anel-O | anillo-O |
| 30 | 231017 | 1 | Seal | joint étanchéité | Dichtung | vedador | sello |
| 31 | 231231 | 1 | Plug | bouchon | Stopfen | bujão | tapón |
| 32 | [2]239216 | 1 | Shaft | arbre | Welle | ávore | árbol |
| 33 | 232240 | 1 | Plug | bouchon | Stopfen | bujão | tapón |
| 34 | 25K040716 | 1 | O ring | joint torique | O ring | anel-O | anillo-O |
| 35 | 223989 | 1 | Ring | anneau | Ring | anel | anillo |
| 36 | 17C000814 | 8 | Bolt | boulon | Bolzen | parafuso | bulón |
| 37 | [6]236574 | 12 | Thrust washer | rondelle pouss | Ritzeldruck | arruela empuxo | arandela empuje |
| 38 | 232628 | 12 | Disc inner | disque interieur | Scheibe innen | disco interior | disco interno |
| 39 | 232285 | 14 | Disc outer | disque extérieur | Scheibe, aussen | disco exterior | disco externo |
| 40 | [6,7]232635 | 12 | Disc outer | disque extérieur | Scheibe, aussen | disco exterior | disco externo |
| 41 | 711161 | 1 | Snap ring | circlips | Sperring | anel de trava | anillo de retención |
| 42 | 232370 | 1 | Hub&wsher assy | ass moyeu et rond | Nabe & Beilageinh | cubo e conj arr | conj cubo y aran |
| 43 | 234761 | 1 | Seal | joint étanchéité | Dichtung | vedador | sello |
| 44 | 231300 | 1 | Drum | tambour | Trommel | tambor | tambor |
| 45 | [1]231495 | 1 | Support | support | Abstützung | suporte | soporte |

[1] Inc 46

[2] Inc 31

[3] Ref A6 24150

[4] See 24
[4] Voir 24
[4] Siehe 24
[4] Veja 24
[4] Véase 24

[5] Inc 22

[6] □S/N 94804T➡Winch
[6] □S/N 94804T➡Treuil
[6] □S/N 94804T➡Winde
[6] □S/N 94804T➡Guincho
[6] □S/N 94804T➡Guinche

[7] May require extra discs for shimming.
[7] Peut nécessiter des disques supplémentaires pour le calage.
[7] Vielleicht zusätzliche Scheiben zum Ausgleigh nötig.
[7] Pode requerer discos extras para calçar.
[7] Puede requerir discos adicionales para nivelar.

| | |
|---|---|
| 666CUM | 500E-461-CAC➡500G-9999-CAC |
| 666GM | 513E-490-CAC➡513G-9999-CAC |
| 666GMGR | 515A-101-CAC➡515A-9999-CAC |

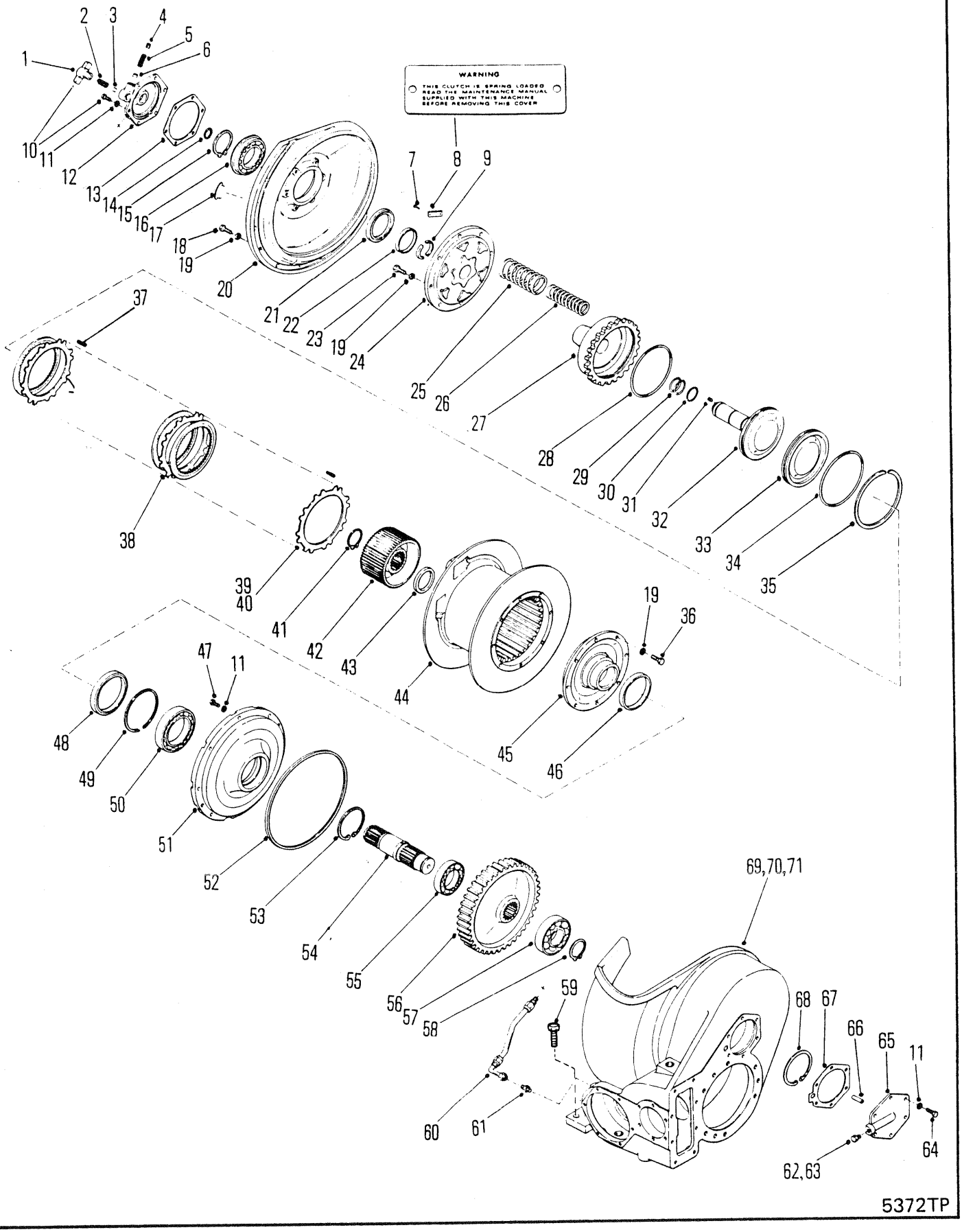
WARNING
THIS CLUTCH IS SPRING LOADED
READ THE MAINTENANCE MANUAL
SUPPLIED WITH THIS MACHINE
BEFORE REMOVING THIS COVER
1
2
3
4
5
6
7
8
9
10
11
12
13
14
15
16
17
18
19
20
21
22
23
24
25
26
27
28
29
30
31
32
33
34
35
36
37
38
39
40
41
42
43
44
45
46
47
48
49
50
51
52
53
54
55
56
57
58
59
60
61
62,63
64
65
66
67
68
69,70,71
5372TP

# WINCH,CABLE DRUM DRIVE SHAFT & CLUTCH W311-1
# TREUIL,ARBRE D'ENTRAÎNEMENT DU TAMBOUR DE CÂBLE & EMBRAYAGE W311-1
# WINDE,ANTRIEBSWELLE DER SEILTROMMEL & KUPPLUNG W311-1
# GUINCHO,EIXO IMPULSOR DO TAMBOR DE CABOS & EMBREAGEM W311-1
# GUINCHE,ARBOL INPULSOR DEL TAMBOR DE CABLES & EMBRAGUE W311-1

| No. | Part No. | Qty | Description | Description | Benennung | Descrição | Descripción |
|---|---|---|---|---|---|---|---|
| 46 | **231843** | 1 | Sleeve | manchon | Muffe | luva | manguito |
| 47 | **1C000616** | 8 | Bolt | boulon | Bolzen | parafuso | bulón |
| 48 | **231842** | 1 | Seal | joint étanchéité | Dichtung | vedador | sello |
| 49 | **217693** | 1 | Ring | anneau | Ring | anel | anillo |
| 50 | **225800** | 1 | Bearing | palier | Lager | mancal | cojinete |
| 51 | **231294** | 1 | Support | support | Abstützung | suporte | soporte |
| 52 | **218777** | 1 | O-ring | joint torique | O Ring | anel-O | anillo-O |
| 53 | **952160** | 1 | Snap ring | circlips | Sperring | anel de trava | anillo de retención |
| 54 | **231290** | 1 | Shaft | arbre | Welle | ávore | árbol |
| 55 | **774623** | 1 | Bearing | palier | Lager | mancal | cojinete |
| 56 | **232368** | 1 | Gear | engrenage | Zahnrad | engrenagem | engranaje |
| 57 | **225793** | 1 | Bearing | palier | Lager | mancal | cojinete |
| 58 | **230067** | 1 | Ring | anneau | Ring | anel | anillo |
| 59 | **17C002040** | 4 | Bolt | boulon | Bolzen | parafuso | bulón |
| 60 | **231399** | 1 | Hose | tuyau flexible | Schlauch | mangueira | manguera |
| 61 | **38F000009** | 1 | Adapter | adaptateur | Zwischenstück | adaptador | adaptador |
| 62 | **16F000024** | 1 | Plug | bouchon | Stopfen | bujão | tapón |
| 63 | **40K000002** | 1 | Pipe plug | obturateur tuyau | Rohrstopfen | bujão do cano | tapón de cao |
| 64 | **1C000620** | 6 | Bolt | boulon | Bolzen | parafuso | bulón |
| 65 | **231292** | 1 | Cover | couvercle | Deckel | tampa | tapa |
| 66 | **222031** | 1 | Tube | tube | Rohr | tubo | tubo |
| 67 | **231293** | 1 | Gasket | garniture | Dichtung | gaxeta | empaquetadura |
| 68 | **711178** | 1 | Ring | anneau | Ring | anel | anillo |
| 69 | **220725** | 1 | Name plate | plaque duconstructr | Namensschild | placa do nome | placa de nombre |
| 70 | **207878** | 2 | Screw | vis | Schraube | parafuso | tornillo |
| 71 | [3]**233859** | 1 | Case winch | boitier treuil | Windengehäuse | caixa guincho | caja guinche |

[1] Inc 46

[2] Inc 31

[3] Ref A6 24150

[4] See 24
[4] Voir 24
[4] Siehe 24
[4] Veja 24
[4] Véase 24

[5] Inc 22

[6] □S/N 94804T➡Winch
[6] □S/N 94804T➡Treuil
[6] □S/N 94804T➡Winde
[6] □S/N 94804T➡Guincho
[6] □S/N 94804T➡Guinche

[7] May require extra discs for shimming.
[7] Peut nécessiter des disques supplémentaires pour le calage.
[7] Vielleicht zusätzliche Scheiben zum Ausgleigh nötig.
[7] Pode requerer discos extras para calçar.
[7] Puede requerir discos adicionales para nivelar.

| | |
|---|---|
| 666CUM | 500E-461-CAC➡500G-9999-CAC |
| 666GM | 513E-490-CAC➡513G-9999-CAC |
| 666GMGR | 515A-101-CAC➡515A-9999-CAC |

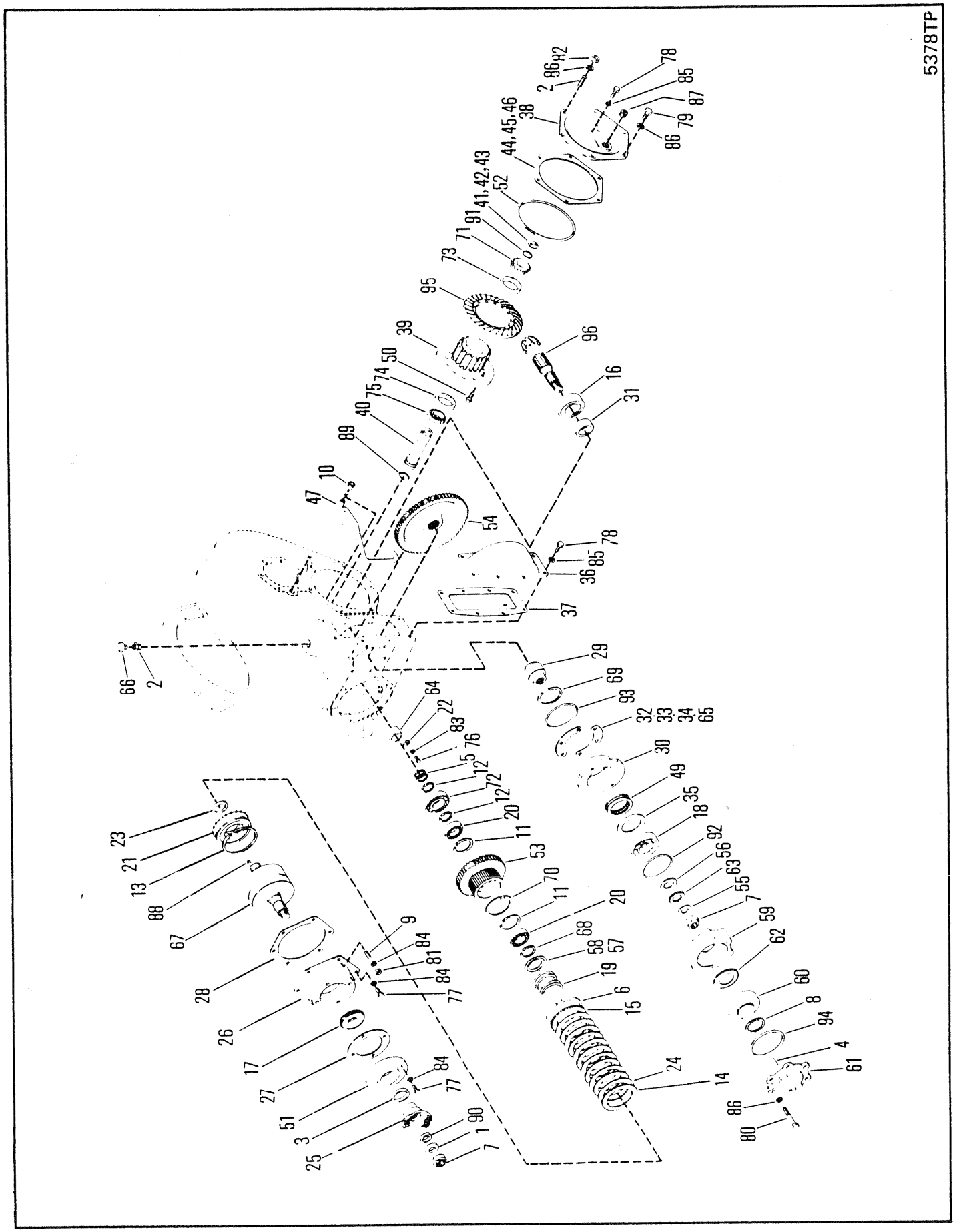
5378TP

# WINCH,INPUT CLUTCH, PINION SHAFT & RING GEAR SHAFT GROUP W-300
# TREUIL,EMBRAYAGE D'ENTRÉE, AXE DU PIGNON & GROUPE D'ARBRE D'ENGRENAGE DE LA CO W-300
# WINDE,EINGANGSKUPPLUNG, RITZELWELLE & ZAHNKRANZWELLE W-300
# GUINCHO,GRUPO DE EMBREAGEM DE ENTRADA, EIXO DE PINHÃO & GRUPO DE EIXO DE ENGR W-300
# GUINCHE,EMBRAGUE DE ENTRADA, EJE PIÑON & GRUPO DEL EJE CORONA W-300

| No. | Part No. | Qty | Description | Description | Benennung | Descrição | Descripción |
|---|---|---|---|---|---|---|---|
| A | [1]------ | 1 | Winch assy | treuil ens | Winde vollst | guincho conj | guinche conj |
| 1 | **102745** | 1 | Washer | rondelle | Scheibe | arruela | arandela |
| 2 | **206770** | 2 | Stud | goujon | Stift | prisioneiro | espárrago |
| 3 | **206864** | 1 | Seal | joint étanchéité | Dichtung | vedador | sello |
| 4 | **211853** | 2 | Pin | goupille | Stift | pino | pasador |
| 5 | **215183** | 2 | Ring | anneau | Ring | anel | anillo |
| 6 | **215190** | 1 | Ring | anneau | Ring | anel | anillo |
| 7 | **216058** | 2 | Nut | écrou | Mutter | porca | tuerca |
| 8 | **217420** | 1 | Ring | anneau | Ring | anel | anillo |
| 9 | **220818** | 1 | Stud | goujon | Stift | prisioneiro | espárrago |
| 10 | **222067** | 1 | Sleeve | manchon | Muffe | luva | manguito |
| 11 | **223877** | 2 | Ring | anneau | Ring | anel | anillo |
| 12 | **224083** | 2 | Ring | anneau | Ring | anel | anillo |
| 13 | **224771** | 1 | Ring | anneau | Ring | anel | anillo |
| 13A | [7]**242873** | 1 | Seal | joint étanchéité | Dichtung | vedador | sello |
| 14 | **224772** | 6 | Disc | disque | Scheibe | disco | disco |
| 15 | **224774** | 1 | Plate | plaque | Platte | placa | placa |
| 16 | **225844** | 1 | Bearing | palier | Lager | mancal | cojinete |
| 17 | **225956** | 1 | Bearing | palier | Lager | mancal | cojinete |
| 18 | **229862** | 1 | Bearing | palier | Lager | mancal | cojinete |
| 19 | **230822** | 1 | Spring | ressort | Feder | mola | resorte |
| 20 | **230829** | 2 | Bearing | palier | Lager | mancal | cojinete |
| 21 | [8]**802164** | 1 | Piston Kit | jeu de pistons | Kolbensatz | jôgo de pistão | juego de pistón |
| 22 | **230851** | 1 | Lock | serrure | Schloss | fechadura | cerradura |
| 23 | **230857** | 1 | Seal | joint étanchéité | Dichtung | vedador | sello |
| 24 | **230911** | 6 | Disc | disque | Scheibe | disco | disco |
| 25 | **231059** | 1 | Flange | flange | Flansch | bride | brida |
| 26 | **231260** | 1 | Cap | chapeau | Kappe | tampa | tapa |
| 27 | **231262** | 1 | Gasket | garniture | Dichtung | gaxeta | empaquetadura |
| 28 | **231264** | 1 | Gasket | garniture | Dichtung | gaxeta | empaquetadura |
| 29 | **231269** | 1 | Race | course | Laufring | canaleta | vía |
| 30 | **231270** | 1 | Race | course | Laufring | canaleta | vía |
| 31 | **231271** | 1 | Spacer | entretoise | Distanzteil | espaçador | espaciador |
| 32 | ‡**231274** | - | Shim .004 | cale-0,10MM | Beilage-0,10MM | calço-0,10MM | planchita-0,10MM |
| 33 | ‡**231275** | - | Shim .007 | cale-0,18MM | Beilage-0,18MM | calço-0,18MM | planchita-0,18MM |
| 34 | ‡**231276** | - | Shim .010 | cale-0,25MM | Beilage-0,25MM | calço-0,25MM | planchita-0,25MM |
| 35 | **231277** | 1 | Washer | rondelle | Scheibe | arruela | arandela |
| 36 | **231278** | 1 | Cover | couvercle | Deckel | tampa | tapa |
| 37 | **231279** | 1 | Gasket | garniture | Dichtung | gaxeta | empaquetadura |
| 38 | **231280** | 1 | Cover | couvercle | Deckel | tampa | tapa |
| 39 | **231281** | 1 | Hub assy | moyeu ens | Nabe vollst | cubo conj | cubo conj |
| 40 | **231282** | 1 | Shaft | arbre | Welle | ávore | árbol |
| 41 | ‡**231283** | - | Shim .004 | cale-0,10MM | Beilage-0,10MM | calço-0,10MM | planchita-0,10MM |
| 42 | ‡**231284** | - | Shim .007 | cale-0,18MM | Beilage-0,18MM | calço-0,18MM | planchita-0,18MM |
| 43 | ‡**231285** | - | Shim .010 | cale-0,25MM | Beilage-0,25MM | calço-0,25MM | planchita-0,25MM |
| 44 | ‡**231286** | - | Shim .004 | cale-0,10MM | Beilage-0,10MM | calço-0,10MM | planchita-0,10MM |
| 45 | ‡**231287** | - | Shim .007 | cale-0,18MM | Beilage-0,18MM | calço-0,18MM | planchita-0,18MM |

[1] Ref A 6 22000

[2] Install to prevent opposite rotation of input P.T.O. drive shaft on the transmission
[2] Installer de sorte à étiver que la rotation de l'arbre moteur P.T.O. d'entrée sur
[2] Einbauen, um entgegengesetzten Lauf der P.T.O. Eingangswelle am Getriebe zu verhindern[1] Instalar para evitar rotação oposta do eixo de propulsão P.T
[2] Instalar para evitar rotacion contrarioa del eje impulsor P.T.O. sobre la transmisión

[3] Inc 3

[4] Inc 4

[5] See 48 & 52
[5] Voir 48 & 52
[5] Siehe 48 & 52
[5] Veja 48 & 52
[5] Véase 48 & 52

[6] Inc 95 & 96

[7] Teflon

[8] Inc 13A

666CUM 500D-1001-CAC➞500E-460-CAC
666GM 513E-101-CAC➞513E-489-CAC

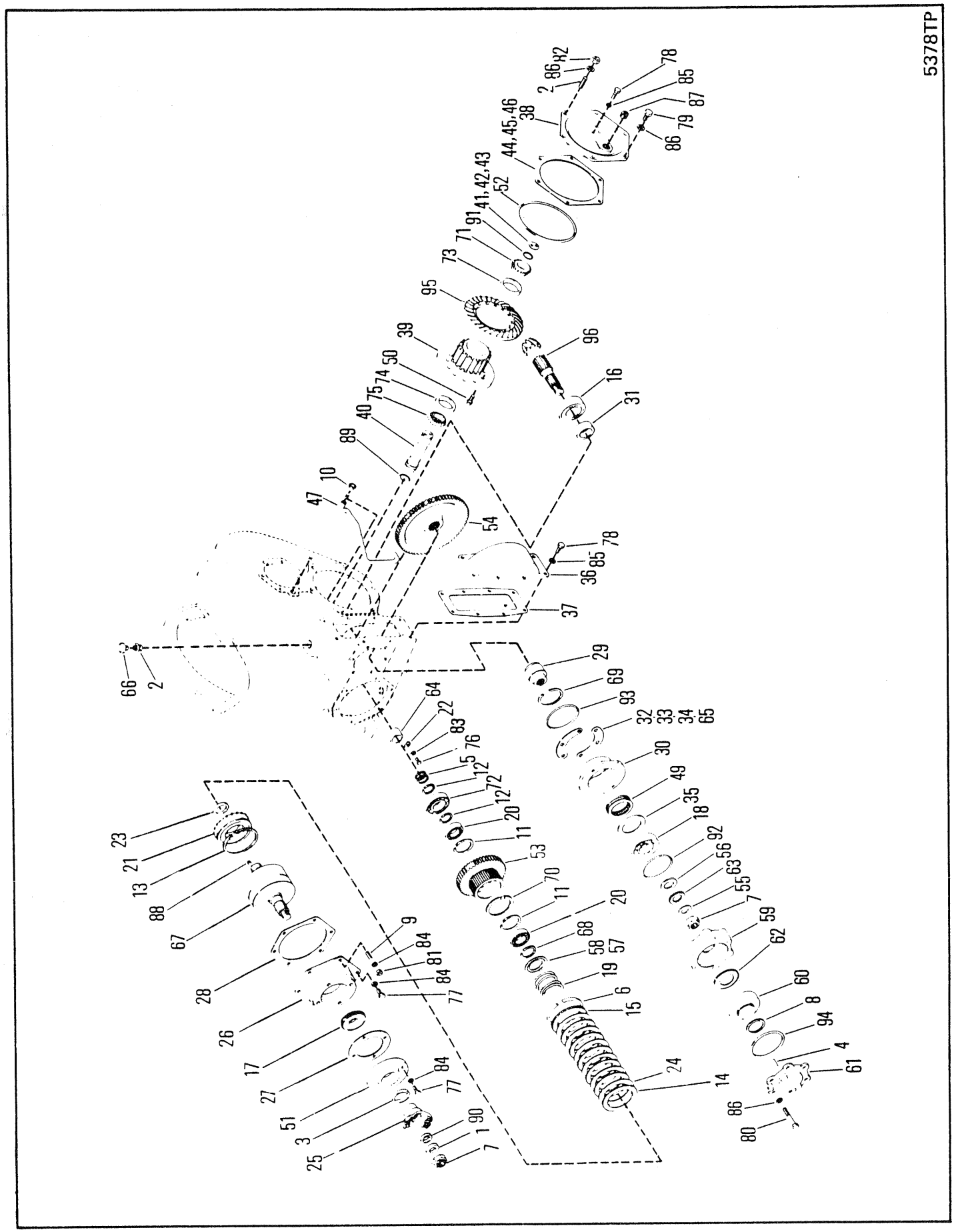
5378TP

# WINCH,INPUT CLUTCH, PINION SHAFT & RING GEAR SHAFT GROUP W-300
# TREUIL,EMBRAYAGE D'ENTRÉE, AXE DU PIGNON & GROUPE D'ARBRE D'ENGRENAGE DE LA CO W-300
# WINDE,EINGANGSKUPPLUNG, RITZELWELLE & ZAHNKRANZWELLE W-300
# GUINCHO,GRUPO DE EMBREAGEM DE ENTRADA, EIXO DE PINHÃO & GRUPO DE EIXO DE ENGR W-300
# GUINCHE,EMBRAGUE DE ENTRADA, EJE PIÑON & GRUPO DEL EJE CORONA W-300

| No. | Part No. | Qty | Description | Description | Benennung | Descrição | Descripción |
|---|---|---|---|---|---|---|---|
| 46 | ‡231288 | - | Shim .010 | cale-0,25MM | Beilage-0,25MM | calço-0,25MM | planchita-0,25MM |
| 47 | 231310 | 1 | Tube | tube | Rohr | tubo | tubo |
| 48 | [6]231331 | 1 | Rng gear&pin set | ens cour dentée goup | Tellerrad&Ritzlstz | jogo coroa&pinhão | jg corona&pasador |
| 49 | [2]231342 | 1 | Sprag | bras dancrage | Bremsklotz | colço | calzo |
| 50 | 231345 | 12 | Screw | vis | Schraube | parafuso | tornillo |
| 51 | [3]231385 | 1 | Retainer | arrêtoir | Halterung | retentor | retén |
| 52 | 25K040900 | 1 | O-ring | joint torique | O Ring | anel-O | anillo-O |
| 53 | 231743 | 1 | Gear | engrenage | Zahnrad | engrenagem | engranaje |
| 54 | 231744 | 1 | Gear | engrenage | Zahnrad | engrenagem | engranaje |
| 55 | 231923 | 1 | Washer | rondelle | Scheibe | arruela | arandela |
| 56 | 231924 | 1 | Washer | rondelle | Scheibe | arruela | arandela |
| 57 | 232089 | 1 | Retainer | arrêtoir | Halterung | retentor | retén |
| 58 | 232141 | 1 | Spacer | entretoise | Distanzteil | espaçador | espaciador |
| 59 | 232156 | 1 | Housing | botier | Gehuse | carcaça | carcasa |
| 60 | 232157 | 1 | Piston | piston | Kolben | pistão | pistón |
| 61 | [4]232158 | 1 | Cover | couvercle | Deckel | tampa | tapa |
| 62 | 232159 | 1 | Disc | disque | Scheibe | disco | disco |
| 63 | 232160 | 1 | Hub | moyeu | Nabe | cubo | cubo |
| 64 | 232346 | 1 | Race | course | Laufring | canaleta | vía |
| 65 | ‡232715 | - | Shim .020 | cale-0,51MM | Beilage-0,51MM | calço-0,51MM | planchita-0,51MM |
| 66 | 233598 | 1 | Air breather | souffleur dair | Luftansauger | respiradouro | respirador de aire |
| 67 | 235784 | 1 | Shaft&Drum assy | tambour&arbre ens | Trommel&Welle voll | tambor&eixo conj | tambour&eje conj |
| 68 | 654613 | 1 | Ring | anneau | Ring | anel | anillo |
| 69 | 711022 | 1 | Ring | anneau | Ring | anel | anillo |
| 70 | 731160 | 1 | Ring | anneau | Ring | anel | anillo |
| 71 | 731288 | 1 | Cover | couvercle | Deckel | tampa | tapa |
| 72 | 743439 | 1 | Bearing | palier | Lager | mancal | cojinete |
| 73 | 784562 | 1 | Cup | cuvette | Schale | capa | cubeta |
| 74 | 1314773 | 1 | Cup | cuvette | Schale | capa | cubeta |
| 75 | 1314774 | 1 | Cone | cône | Kegel | cone | cono |
| 76 | 1C000510 | 1 | Bolt | boulon | Bolzen | parafuso | bulón |
| 77 | 1C000618 | 9 | Bolt | boulon | Bolzen | parafuso | bulón |
| 78 | 1C000722 | 10 | Bolt | boulon | Bolzen | parafuso | bulón |
| 79 | 1C000820 | 4 | Bolt | boulon | Bolzen | parafuso | bulón |
| 80 | 1C000860 | 6 | Bolt | boulon | Bolzen | parafuso | bulón |
| 81 | 2D000006 | 1 | Nut | écrou | Mutter | porca | tuerca |
| 82 | 2D000008 | 2 | Nut | écrou | Mutter | porca | tuerca |
| 83 | 4E000005 | 1 | Lockwasher | rondelle frein | Sicherungsscheibe | arruela de pressão | arandela seguridad |
| 84 | 4E000006 | 10 | Lockwasher | rondelle frein | Sicherungsscheibe | arruela de pressão | arandela seguridad |
| 85 | 4E000007 | 10 | Lockwasher | rondelle frein | Sicherungsscheibe | arruela de pressão | arandela seguridad |
| 86 | 4E000008 | 12 | Lockwasher | rondelle frein | Sicherungsscheibe | arruela de pressão | arandela seguridad |
| 87 | 14F000016 | 1 | Plug | bouchon | Stopfen | bujão | tapón |
| 88 | 16F000001 | 1 | Plug | bouchon | Stopfen | bujão | tapón |
| 89 | 25K030114 | 1 | O-ring | joint torique | O Ring | anel-O | anillo-O |
| 90 | 25K040112 | 1 | O-ring | joint torique | O Ring | anel-O | anillo-O |

[1] Ref A 6 22000

[2] Install to prevent opposite rotation of input P.T.O. drive shaft on the transmission
[2] Installer de sorte à étiver que la rotation de l'arbre moteur P.T.O. d'entrée sur
[2] Einbauen, um entgegengesetzten Lauf der P.T.O. Eingangswelle am Getriebe zu verhindern[1] Instalar para evitar rotação oposta do eixo de propulsão P.T
[2] Instalar para evitar rotacion contrarioa del eje impulsor P.T.O. sobre la transmisión

[3] Inc 3

[4] Inc 4

[5] See 48 & 52
[5] Voir 48 & 52
[5] Siehe 48 & 52
[5] Veja 48 & 52
[5] Véase 48 & 52

[6] Inc 95 & 96

[7] Teflon

[8] Inc 13A

666CUM 500D-1001-CAC→500E-460-CAC
666GM 513E-101-CAC→513E-489-CAC

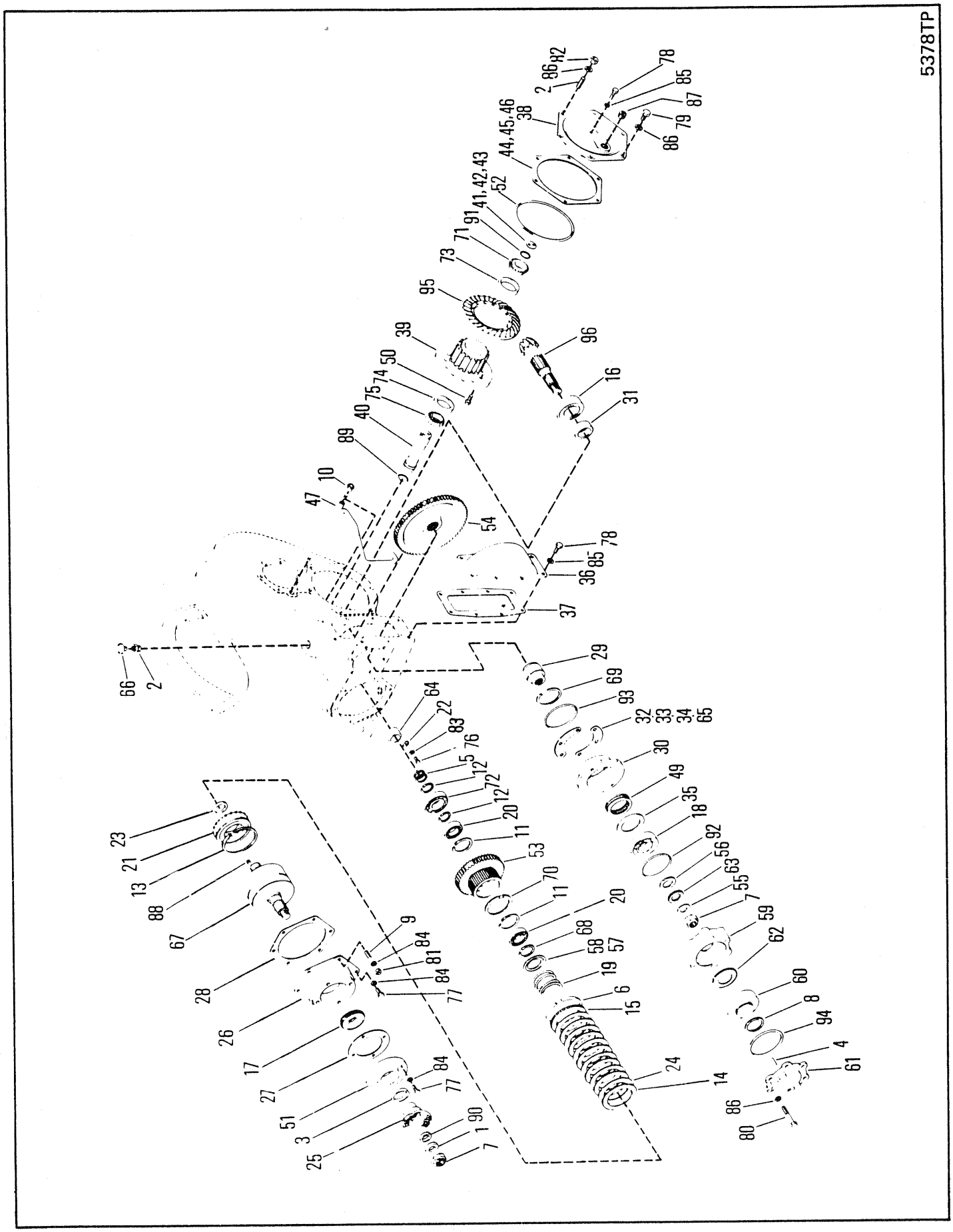
5378TP

# WINCH,INPUT CLUTCH, PINION SHAFT & RING GEAR SHAFT GROUP W-300
# TREUIL,EMBRAYAGE D'ENTRÉE, AXE DU PIGNON & GROUPE D'ARBRE D'ENGRENAGE DE LA CO W-300
# WINDE,EINGANGSKUPPLUNG, RITZELWELLE & ZAHNKRANZWELLE W-300
# GUINCHO,GRUPO DE EMBREAGEM DE ENTRADA, EIXO DE PINHÃO & GRUPO DE EIXO DE ENGR W-300
# GUINCHE,EMBRAGUE DE ENTRADA, EJE PIÑON & GRUPO DEL EJE CORONA W-300

| No. | Part No. | Qty | Description | Description | Benennung | Descrição | Descripción |
|---|---|---|---|---|---|---|---|
| 91 | **25K040200** | 1 | O-ring | joint torique | O Ring | anel-O | anillo-O |
| 92 | **25K040408** | 1 | O-ring | joint torique | O Ring | anel-O | anillo-O |
| 93 | **25K040428** | 1 | O-ring | joint torique | O Ring | anel-O | anillo-O |
| 94 | **25K040500** | 1 | O-ring | joint torique | O Ring | anel-O | anillo-O |
| 95 | [5]§--------- | - | Ring gear | couronne dentée | Zahnkranz | corõa | corona |
| 96 | [5]§--------- | - | Gear | engrenage | Zahnrad | engrenagem | engranaje |

[1] Ref A 6 22000

[2] Install to prevent opposite rotation of input P.T.O. drive shaft on the transmission
[2] Installer de sorte à étiver que la rotation de l'arbre moteur P.T.O. d'entrée sur
[2] Einbauen, um entgegengesetzten Lauf der P.T.O. Eingangswelle am Getriebe zu verhindern[1] Instalar para evitar rotação oposta do eixo de propulsão P.T
[2] Instalar para evitar rotacion contrarioa del eje impulsor P.T.O. sobre la transmisión

[3] Inc 3

[4] Inc 4

[5] See 48 & 52
[5] Voir 48 & 52
[5] Siehe 48 & 52
[5] Veja 48 & 52
[5] Véase 48 & 52

[6] Inc 95 & 96

[7] Teflon

[8] Inc 13A

666CUM 500D-1001-CAC→500E-460-CAC
666GM 513E-101-CAC→513E-489-CAC

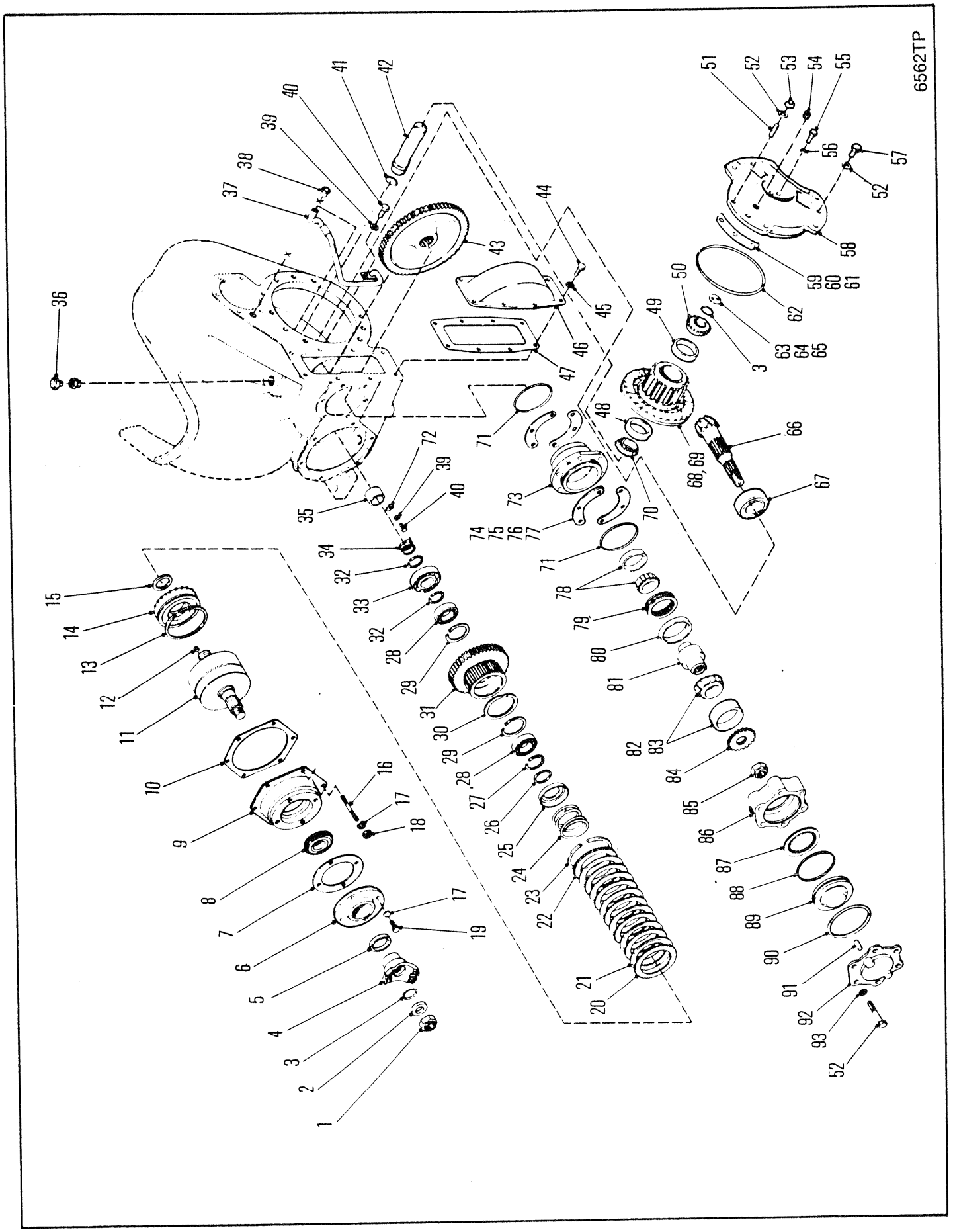
6562TP

# WINCH, INPUT CLUTCH, PINION SHAFT & RING GEAR SHAFT W-311-1
# TREUIL, EMBRAYAGE D'ENTRÉE, AXE DU PIGNON D'ARBRE D'ENGRENAGE DE LA COURONNE W-311-1
# WINDE-EINGANGSKUPPLUNG, RITZELWELLE & ZAHNKRANZWELLE W-311-1
# GUICHO-EMBREAGEM DEENTRADA, EIXO DE PINHÃO & EIXO DE ENGRENAGE W-311-1
# GUINCHE-EMBRAGUE DE ENTRADA, EJE PIÑON & EJE CORONA W-311-1

| No. | Part No. | Qty | Description | Description | Benennung | Descrição | Descripción |
|---|---|---|---|---|---|---|---|
| A | [4]O------ | 1 | Winch assy | treuil ens | Winde vollst | guincho conj | guinche conj |
| B | [3]233361 | 1 | Rng gear&pin set | ens cour dentée goup | Tellerrad&Ritzlstz | jogo coroa&pinhão | jg corona&pasador |
| 1 | 216058 | 1 | Nut | écrou | Mutter | porca | tuerca |
| 2 | 102745 | 1 | Washer | rondelle | Scheibe | arruela | arandela |
| 3 | 25K040112 | 2 | O-ring | joint torique | O Ring | anel-O | anillo-O |
| 4 | 231059 | 1 | Flange | flange | Flansch | bride | brida |
| 5 | 206864 | 1 | Seal oil | jnt étanchéité huile | Idichtung | vedação de óleo | sello de aceite |
| 6 | 231385 | 1 | Retainer | arrêtoir | Halterung | retentor | retén |
| 7 | 231262 | 1 | Gasket | garniture | Dichtung | gaxeta | empaquetadura |
| 8 | 225956 | 2 | Bearing | palier | Lager | mancal | cojinete |
| 9 | 231260 | 1 | Cap | chapeau | Kappe | tampa | tapa |
| 10 | 231264 | 1 | Gasket | garniture | Dichtung | gaxeta | empaquetadura |
| 11 | 235784 | 1 | Shaft&Drum assy | tambour&arbre ens | Trommel&Welle voll | tambor&eixo conj | tambour&eje conj |
| 12 | 16F000001 | 1 | Plug | bouchon | Stopfen | bujão | tapón |
| 13 | 224771 | 1 | Ring | anneau | Ring | anel | anillo |
| 13A | [5]242873 | 1 | Seal | joint étanchéité | Dichtung | vedador | sello |
| 14 | [6]802164 | 1 | Piston Kit | jeu de pistons | Kolbensatz | jôgo de pistão | juego de pistón |
| 15 | 230857 | 1 | Seal | joint étanchéité | Dichtung | vedador | sello |
| 16 | 203253 | 12 | Stud | goujon | Stift | prisioneiro | espárrago |
| 17 | 4E000006 | 22 | Lockwasher | rondelle frein | Sicherungsscheibe | arruela de pressão | arandela seguridad |
| 18 | 62D000006 | - | Nut | écrou | Mutter | porca | tuerca |
| 19 | 1C000618 | 4 | Bolt | boulon | Bolzen | parafuso | bulón |
| 20 | 224772 | 6 | Clutch disc | disque dembrayage | Kupplungsscheibe | disco da embreagem | disco de embrague |
| 20A | 230911 | 6 | Clutch disc | disque dembrayage | Kupplungsscheibe | disco da embreagem | disco de embrague |
| 21 | 224774 | 1 | End plate | plaque dextrémité | Endplatte | placa terminal | placa extrema |
| 22 | 215190 | 1 | Ring | anneau | Ring | anel | anillo |
| 23 | 230822 | 1 | Spring | ressort | Feder | mola | resorte |
| 24 | 232089 | 1 | Retainer | arrêtoir | Halterung | retentor | retén |
| 25 | 232141 | 1 | Spacer | entretoise | Distanzteil | espaçador | espaciador |
| 26 | 654613 | 1 | Ring | anneau | Ring | anel | anillo |
| 27 | 654613 | 1 | Ring | anneau | Ring | anel | anillo |
| 28 | 230829 | 2 | Bearing | palier | Lager | mancal | cojinete |
| 29 | 223877 | 2 | Snap ring | circlips | Sperring | anel de trava | anillo de retención |
| 30 | 731160 | 1 | Ring | anneau | Ring | anel | anillo |
| 31 | [1]231743 | 1 | Gear | engrenage | Zahnrad | engrenagem | engranaje |
| 32 | 224083 | 3 | Ring retaining | bague darrêt | Haltering | anel retentor | anillo de retención |
| 33 | 743439 | 2 | Bearing | palier | Lager | mancal | cojinete |
| 34 | 215183 | 2 | Ring | anneau | Ring | anel | anillo |
| 35 | 232346 | 1 | Race | course | Laufring | canaleta | vía |
| 36 | 233598 | 1 | Breather | reniflard | Entlüfter | respiradouro | respiradero |
| 37 | 232348 | 1 | Tube | tube | Rohr | tubo | tubo |
| 38 | 222067 | 1 | Sleeve | manchon | Muffe | luva | manguito |
| 39 | 4E000005 | 2 | Lockwasher | rondelle frein | Sicherungsscheibe | arruela de pressão | arandela seguridad |
| 40 | 1C000510 | 2 | Bolt | boulon | Bolzen | parafuso | bulón |
| 41 | 25K040200 | 1 | O ring | joint torique | O ring | anel-O | anillo-O |
| 42 | 232363 | 1 | Shaft | arbre | Welle | ávore | árbol |
| 43 | [2]231744 | 1 | Gear | engrenage | Zahnrad | engrenagem | engranaje |
| 44 | 9C000814 | 12 | Bolt | boulon | Bolzen | parafuso | bulón |
| 45 | 1C000722 | 8 | Bolt | boulon | Bolzen | parafuso | bulón |

[1] 41 teeth
[1] 41 dents
[1] 41 Zähne
[1] 41 dentes
[1] 41 dientes

[2] 67 teeth
[2] 67 dents
[2] 67 Zähne
[2] 67 dentes
[2] 67 dientes

[3] Inc 44, 66 & 68

[4] Inc 1➞93 Ref A6 23000

[5] Teflon

[6] Inc 13A

666CUM 500E-461-CAC➞500E-9999-CAC
666GM 513E-490-CAC➞513E-9999-CAC 513H-101-CAC➞513H-9999-CAC
666GMGR 515A-101-CAC➞515A-9999-CAC

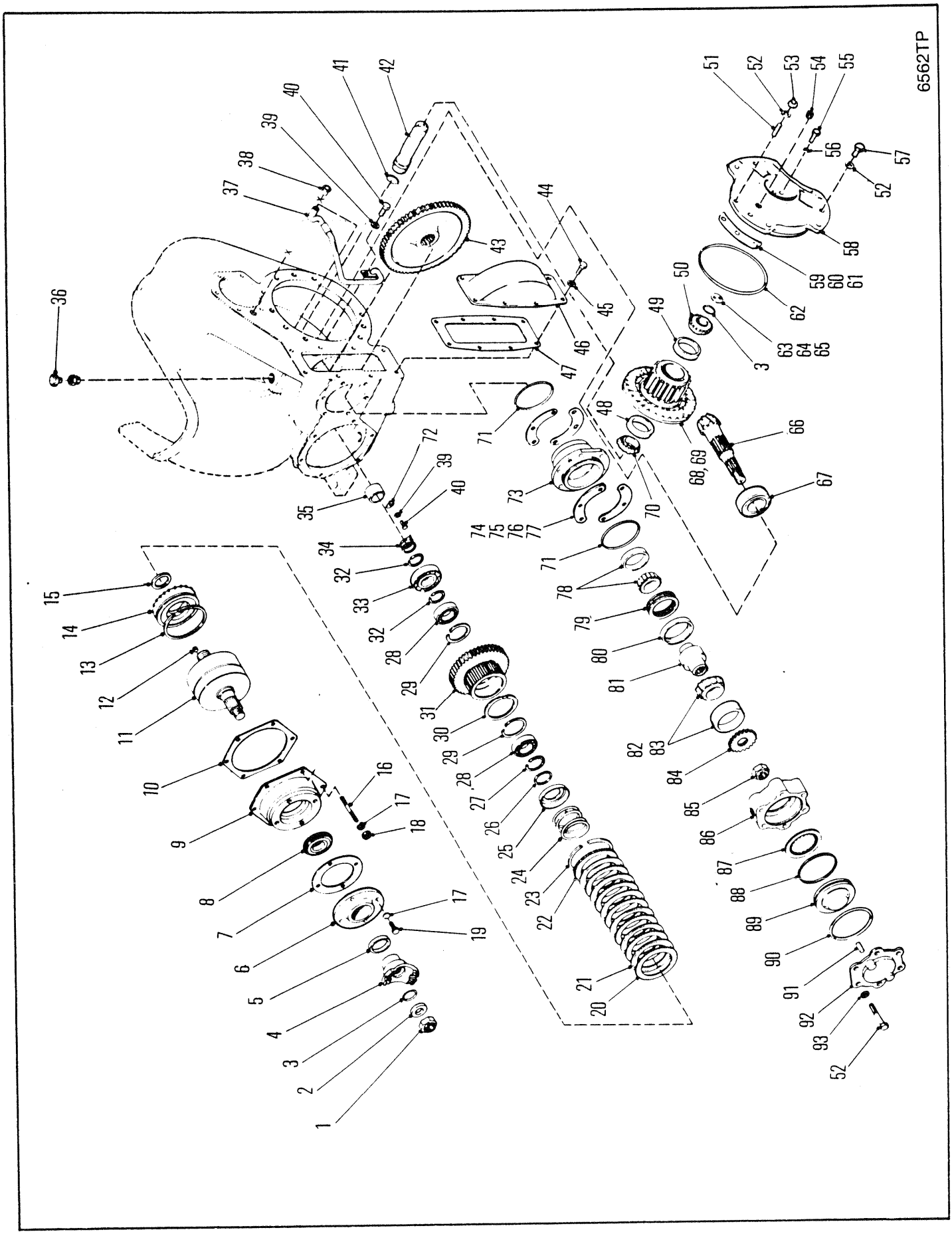
6562TP

# WINCH, INPUT CLUTCH, PINION SHAFT & RING GEAR SHAFT W-311-1
# TREUIL, EMBRAYAGE D'ENTRÉE, AXE DU PIGNON D'ARBRE D'ENGRENAGE DE LA COURONNE W-311-1
# WINDE-EINGANGSKUPPLUNG, RITZELWELLE & ZAHNKRANZWELLE W-311-1
# GUICHO-EMBREAGEM DEENTRADA, EIXO DE PINHÃO & EIXO DE ENGRENAGE W-311-1
# GUINCHE-EMBRAGUE DE ENTRADA, EJE PIÑON & EJE CORONA W-311-1

| No. | Part No. | Qty | Description | Description | Benennung | Descrição | Descripción |
|---|---|---|---|---|---|---|---|
| 46 | **231278** | 1 | Cover | couvercle | Deckel | tampa | tapa |
| 47 | **231279** | 1 | Gasket | garniture | Dichtung | gaxeta | empaquetadura |
| 48 | **1304638** | 1 | Cup | cuvette | Schale | capa | cubeta |
| 49 | **1314773** | 1 | Cup | cuvette | Schale | capa | cubeta |
| 50 | **1314774** | 1 | Cone | cône | Kegel | cone | cono |
| 51 | **206770** | 1 | Stud | goujon | Stift | prisioneiro | espárrago |
| 52 | **4E000008** | 15 | Lockwasher | rondelle frein | Sicherungsscheibe | arruela de pressão | arandela seguridad |
| 53 | **2D000008** | 5 | Nut | écrou | Mutter | porca | tuerca |
| 54 | **13F000024** | 1 | Plug | bouchon | Stopfen | bujão | tapón |
| 55 | **17C000724** | 2 | Bolt | boulon | Bolzen | parafuso | bulón |
| 56 | **4E000007** | 15 | Lockwasher | rondelle frein | Sicherungsscheibe | arruela de pressão | arandela seguridad |
| 57 | **1C000820** | 4 | Bolt | boulon | Bolzen | parafuso | bulón |
| 58 | **233194** | 1 | Cover | couvercle | Deckel | tampa | tapa |
| 59 | ‡**232365** | - | Shim .004 | cale-0,10MM | Beilage-0,10MM | calço-0,10MM | planchita-0,10MM |
| 60 | ‡**232366** | - | Shim .007 | cale-0,18MM | Beilage-0,18MM | calço-0,18MM | planchita-0,18MM |
| 61 | ‡**232367** | - | Shim .010 | cale-0,25MM | Beilage-0,25MM | calço-0,25MM | planchita-0,25MM |
| 62 | **25K041000** | 1 | O-ring | joint torique | O Ring | anel-O | anillo-O |
| 63 | **231283** | - | Shim .004 | cale-0,10MM | Beilage-0,10MM | calço-0,10MM | planchita-0,10MM |
| 64 | ‡**231284** | - | Shim .007 | cale-0,18MM | Beilage-0,18MM | calço-0,18MM | planchita-0,18MM |
| 65 | **231285** | - | Shim .010 | cale-0,25MM | Beilage-0,25MM | calço-0,25MM | planchita-0,25MM |
| 66 | §------ | 1 | Pinion | pignon | Ritzel | pinhão | pion |
| 67 | **225844** | 1 | Roller | galet | Rolle | rolete | rodillo |
| 68 | **233302** | 1 | Hub | moyeu | Nabe | cubo | cubo |
| 69 | §------- | 1 | Ring gear | couronne dentée | Zahnkranz | corõa | corona |
| 70 | **232362** | 1 | Cone | cône | Kegel | cone | cono |
| 71 | **25K040428** | 2 | O-ring | joint torique | O Ring | anel-O | anillo-O |
| 72 | **230851** | 1 | Lock | serrure | Schloss | fechadura | cerradura |
| 73 | **232349** | 1 | Sprag | bras dancrage | Bremsklotz | colço | calzo |
| 74 | ‡**231274** | - | Shim .004 | cale-0,10MM | Beilage-0,10MM | calço-0,10MM | planchita-0,10MM |
| 75 | ‡**231275** | - | Shim .007 | cale-0,18MM | Beilage-0,18MM | calço-0,18MM | planchita-0,18MM |
| 76 | ‡**231276** | - | Shim .010 | cale-0,25MM | Beilage-0,25MM | calço-0,25MM | planchita-0,25MM |
| 77 | ‡**232715** | - | Shim .020 | cale-0,51MM | Beilage-0,51MM | calço-0,51MM | planchita-0,51MM |
| 78 | **223222** | 1 | Bearing assy | ens palier | Lager vollst | conj mancal | conj cojinete |
| 79 | **232351** | 1 | Sprag assy | ass de bras danc | Bremsklotzeinheit | conj de calços | conjunto del calzo |
| 80 | **233850** | 1 | Retainer | arrêtoir | Halterung | retentor | retén |
| 81 | **232350** | 1 | Race | course | Laufring | canaleta | vía |
| 82 | **232355** | 1 | Bearing assy | ens palier | Lager vollst | conj mancal | conj cojinete |
| 83 | **232356** | 1 | Bearing race | gorge roulement | Kugellagerlaufring | pista rolamento | pista radmiento |
| 84 | **232160** | 1 | Hub | moyeu | Nabe | cubo | cubo |
| 85 | **66D000020** | 1 | Nut | écrou | Mutter | porca | tuerca |
| 86 | **232357** | 1 | Housing | botier | Gehuse | carcaça | carcasa |
| 87 | **232159** | 1 | Disc | disque | Scheibe | disco | disco |
| 88 | **217420** | 1 | Piston ring | segment de piston | Kolbenring | anel do pistão | aro del pistón |
| 89 | **232157** | 1 | Piston | piston | Kolben | pistão | pistón |
| 90 | **25K040500** | 2 | O-ring | joint torique | O Ring | anel-O | anillo-O |
| 91 | **211853** | 1 | Pin | goupille | Stift | pino | pasador |
| 92 | **232158** | 1 | Cover | couvercle | Deckel | tampa | tapa |
| 93 | **1C000864** | 6 | Lockwasher | rondelle frein | Sicherungsscheibe | arruela de pressão | arandela seguridad |

[1] 41 teeth
[1] 41 dents
[1] 41 Zähne
[1] 41 dentes
[1] 41 dientes

[2] 67 teeth
[2] 67 dents
[2] 67 Zähne
[2] 67 dentes
[2] 67 dientes

[3] Inc 44, 66 & 68

[4] Inc 1➞93 Ref A6 23000

[5] Teflon

[6] Inc 13A

666CUM 500E-461-CAC➞500E-9999-CAC
666GM 513E-490-CAC➞513E-9999-CAC 513H-101-CAC➞513H-9999-CAC
666GMGR 515A-101-CAC➞515A-9999-CAC

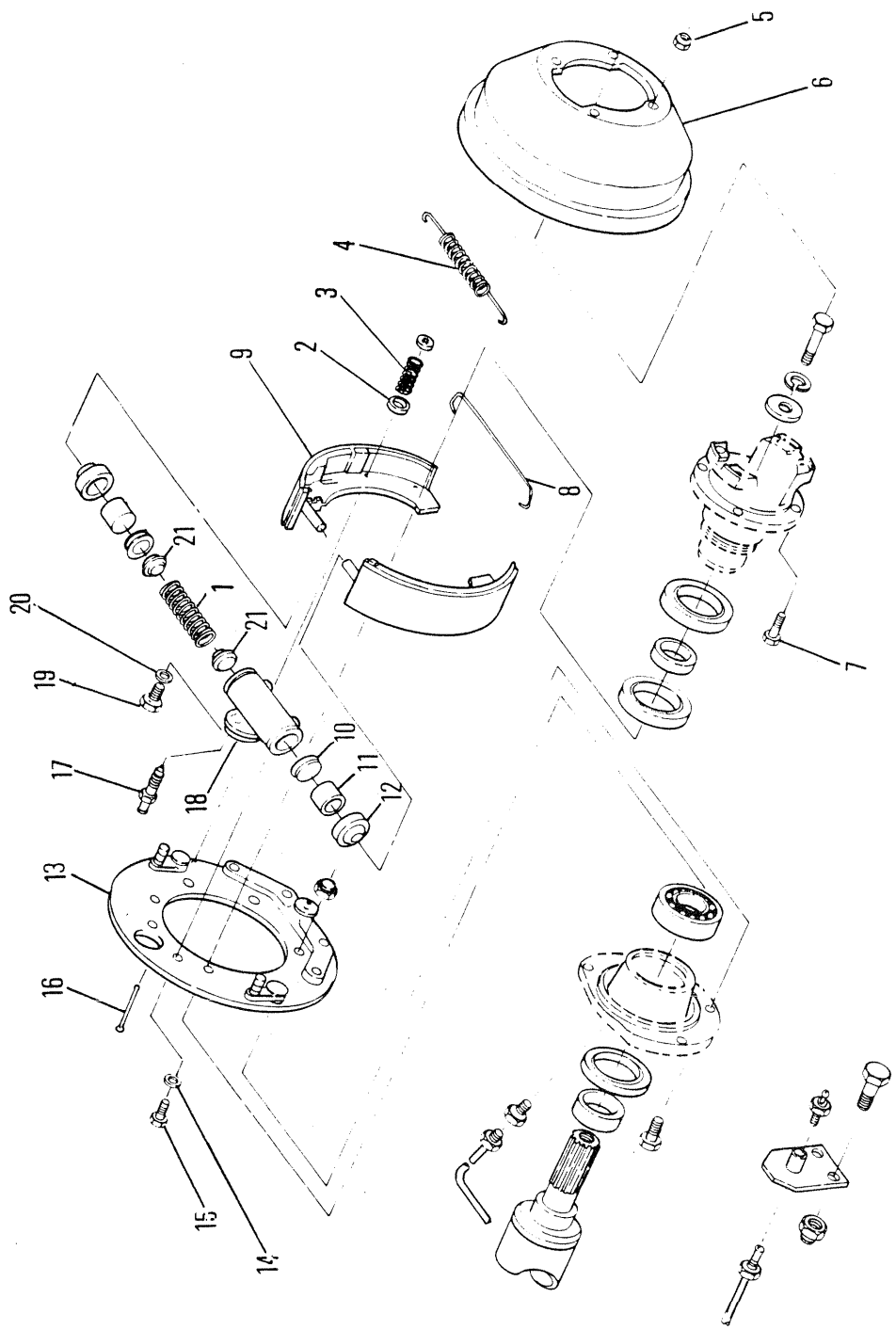
5424TP
1
2
3
4
5
6
7
8
9
10
11
12
13
14
15
16
17
18
19
20
21
21

# SERVICE BRAKE - DRUM
# FREIN PRIMAIRE - TAMBOUR
# DIENSTBREMSE - TROMMEL
# FREIO MANUTENÇÃO - TAMBOR
# FRENO SERVICIO - TAMBOR

| No. | Part No. | Qty | Description | Description | Benennung | Descrição | Descripción |
|---|---|---|---|---|---|---|---|
| A | [1]1900020 | 1 | Brake assy | frein ens | Bremse vollst | freio conj | freno conj |
| B | [2]1990119 | 1 | Wheel cyl assy | ens cylindre de roue | Radzylinder-Bausatz | do cilindro da roda conj | cilindro rueda conj |
| C | [3]1990132 | 1 | Repair kit | trousse de reparation | Reparatursatz | conjunto de reparo | juego de reparación |
| D | [4]1990127 | 1 | Rattle kit | ensemble de bruit | Klappersatz | chocalho | conj traq |
| 1 | 871782 | 1 | Spring | ressort | Feder | mola | resorte |
| 2 | 1990129 | 4 | Retainer | arrêtoir | Halterung | retentor | retén |
| 3 | 1990128 | 2 | Spring | ressort | Feder | mola | resorte |
| 4 | 1990120 | 1 | Spring return | ressort de rappel | Federrückst | devolução mola | retorno a resorte |
| 5 | 18D000008 | 4 | Nut | écrou | Mutter | porca | tuerca |
| 6 | 1900019 | 1 | Drum brake | tambour frein | Trommel Brems | tambor freio | tambor freno |
| 7 | 18C000824 | 4 | Bolt | boulon | Bolzen | parafuso | bulón |
| 8 | 1990122 | 1 | Spring | ressort | Feder | mola | resorte |
| 9 | 1990195 | 2 | Lining | garniture | Belag | lona | cinta |
| 10 | [5]§--------- | 2 | Cup | cuvette | Schale | capa | cubeta |
| 11 | 874125 | 2 | Piston | piston | Kolben | pistão | pistón |
| 12 | [5]§--------- | 2 | Boot | capuchon | Kappe | capuz | capuchón |
| 13 | 1990117 | 1 | Backing plate | plaque de renfort | Stützplatte | placa de apoio | chapa soporte |
| 14 | 4E0000006 | 2 | Lockwasher | rondelle frein | Sicherungsscheibe | arruela de pressão | arandela seguridad |
| 15 | 1C0000614 | 2 | Bolt | boulon | Bolzen | parafuso | bulón |
| 16 | 1990130 | 2 | Rod | tige | Stange | varão | varilla |
| 17 | 861356 | 1 | Screw | vis | Schraube | parafuso | tornillo |
| 18 | [6]§--------- | 1 | Housing | botier | Gehuse | carcaça | carcasa |
| 19 | 699005 | 1 | Adapter | adaptateur | Zwischenstück | adaptador | adaptador |
| 20 | 613750 | 1 | Gasket | garniture | Dichtung | gaxeta | empaquetadura |
| 21 | 1990131 | 2 | Filler | remplisseur | Füller | enchedor | gollete |

[1] Inc 1➡4, 8➡21

[2] Inc 10➡12, 1,17➡21

[3] Inc 10 & 12

[4] Inc 2,3 & 16

[5] See C
[5] Voir C
[5] Siehe C
[5] Veja C
[5] Véase C

[6] See A
[6] Voir A
[6] Siehe A
[6] Veja A
[6] Véase A

666CUM 500D-101-CAC➡500G-2125-CAC
666GM 513E-101-CAC➡513G-2440-CAC
666GMGR 515A-101-CAC➡515A-315-CAC

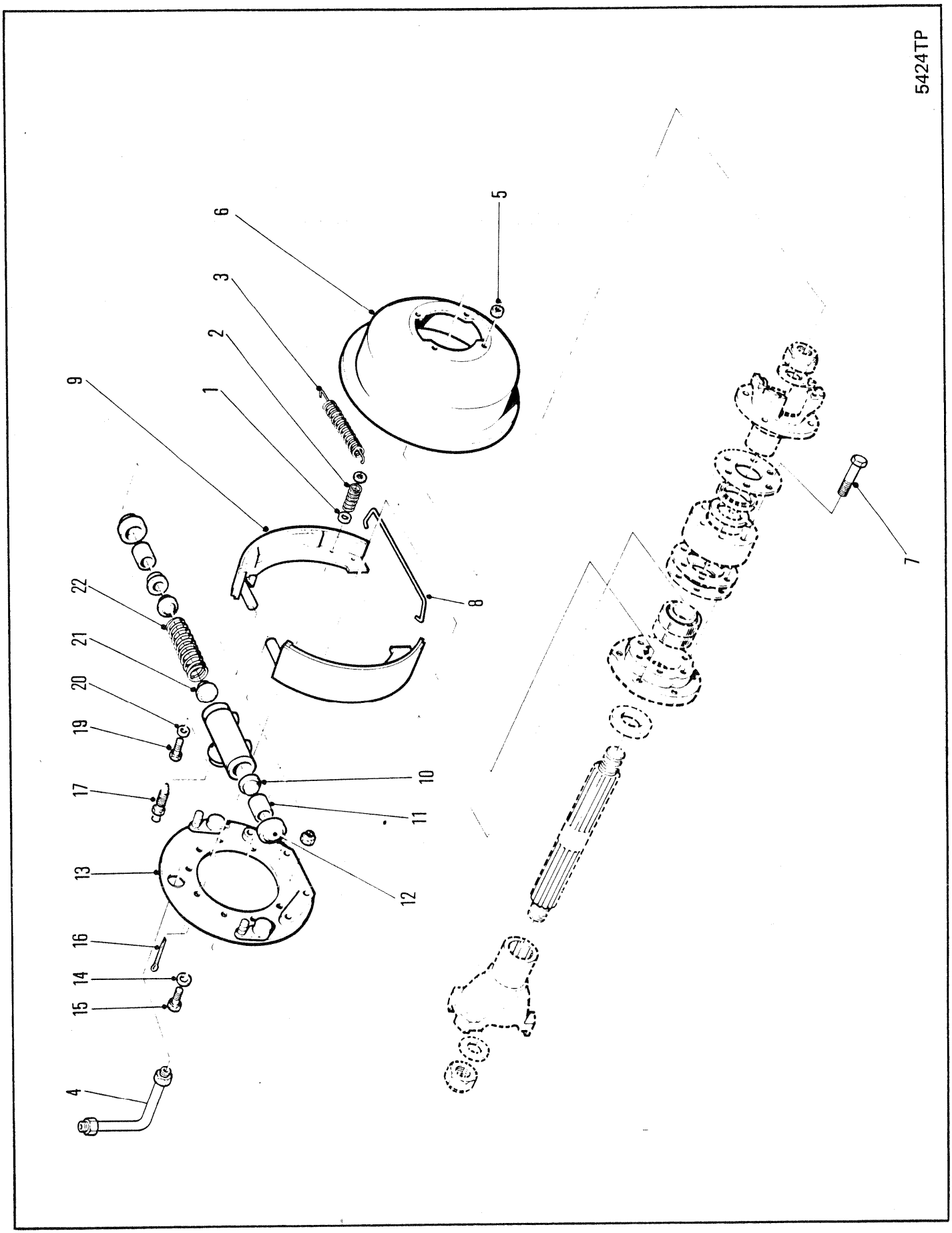
5424TP
1
2
3
4
5
6
7
8
9
10
11
12
13
14
15
16
17
19
20
21
22

## SERVICE BRAKE - DRUM ⊠
## FREIN PRIMAIRE - TAMBOUR ⊠
## DIENSTBREMSE - TROMMEL ⊠
## FREIO MANUTENÇÃO - TAMBOR ⊠
## FRENO SERVICIO - TAMBOR ⊠

| No. | Part No. | Qty | Description | Description | Benennung | Descrição | Descripción |
|---|---|---|---|---|---|---|---|
| A | [1]1900020 | 1 | Brake assy | frein ens | Bremse vollst | freio conj | freno conj |
| B | [2]1990119 | 1 | Wheel cyl assy | ens cylindre de roue | Radzylinder-Bausatz | do cilindro da roda conj | cilindro rueda conj |
| C | [3]887578 | 1 | Repair kit | trousse de reparation | Reparatursatz | conjunto de reparo | juego de reparación |
| D | [4]1990127 | 1 | Rattle kit | ensemble de bruit | Klappersatz | chocalho | conj traq |
| 1 | 1990129 | 4 | Retainer | arrêtoir | Halterung | retentor | retén |
| 2 | 1990128 | 2 | Spring | ressort | Feder | mola | resorte |
| 3 | 1990120 | 1 | Spring return | ressort de rappel | Federrückst | devolução mola | retorno a resorte |
| 4 | 1927531 | 1 | Tube | tube | Rohr | tubo | tubo |
| 5 | 18D000008 | 4 | Nut | écrou | Mutter | porca | tuerca |
| 6 | 1900019 | 1 | Drum brake | tambour frein | Trommel Brems | tambor freio | tambor freno |
| 7 | 18C000824 | 4 | Bolt | boulon | Bolzen | parafuso | bulón |
| 8 | 1990122 | 1 | Spring | ressort | Feder | mola | resorte |
| 9 | 1990195 | 2 | Lining | garniture | Belag | lona | cinta |
| 10 | [5]§--------- | 2 | Cup | cuvette | Schale | capa | cubeta |
| 11 | 874125 | 2 | Piston | piston | Kolben | pistão | pistón |
| 12 | [5]§--------- | 2 | Boot | capuchon | Kappe | capuz | capuchón |
| 13 | 1990117 | 1 | Backing plate | plaque de renfort | Stützplatte | placa de apoio | chapa soporte |
| 14 | 4E0000006 | 2 | Lockwasher | rondelle frein | Sicherungsscheibe | arruela de pressão | arandela seguridad |
| 15 | 1C0000614 | 2 | Bolt | boulon | Bolzen | parafuso | bulón |
| 16 | 1990130 | 2 | Rod | tige | Stange | varão | varilla |
| 17 | 861356 | 1 | Screw | vis | Schraube | parafuso | tornillo |
| 18 | [6]§--------- | 1 | Housing | botier | Gehuse | carcaça | carcasa |
| 19 | 699005 | 1 | Adapter | adaptateur | Zwischenstück | adaptador | adaptador |
| 20 | 613750 | 1 | Gasket | garniture | Dichtung | gaxeta | empaquetadura |
| 21 | 1990131 | 2 | Filler | remplisseur | Füller | enchedor | gollete |
| 22 | 871782 | 1 | Spring | ressort | Feder | mola | resorte |

[1] Inc 1➞4 & 8➞22

[2] Inc 10➞12, 17➞22

[3] Inc 10 & 12

[4] Inc 1, 2, & 16

[5] See item B & C
[5] Voir article B & C
[5] Siehe Punkt B & C
[5] Vea item B & C
[5] Vea item B & C

[6] See item A & B
[6] Voir article A & B
[6] Siehe Punkt A & B
[6] Vea item A & B
[6] Vea item A & B

| | |
|---|---|
| 666CUM | 500G-2126-CAC➞500G-9999-CAC |
| 666GM | 513G-2441-CAC➞513G-9999-CAC |
| 666GMGR | 515A-316-CAC➞515A-9999-CAC |

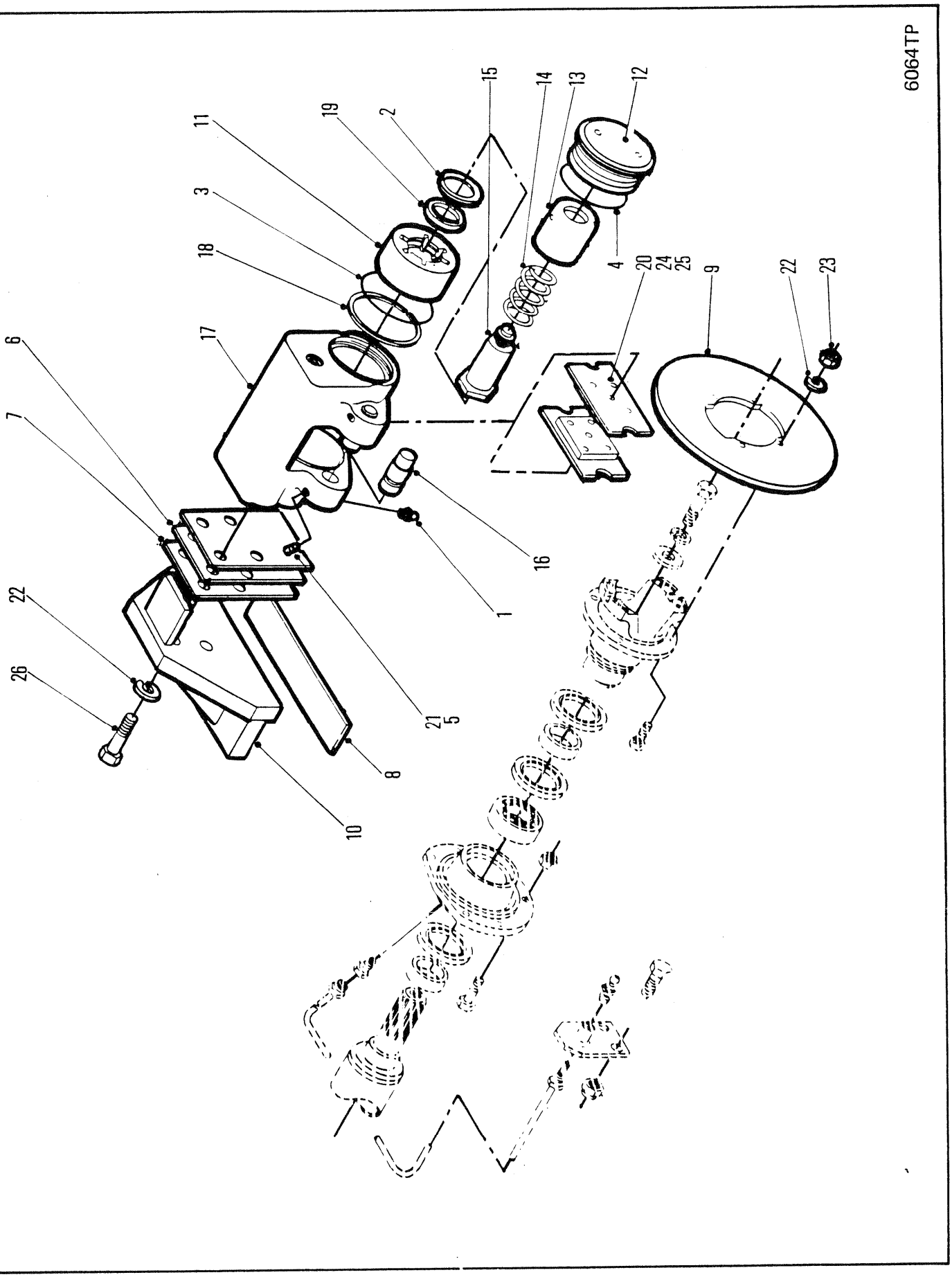
6064TP
1
2
3
4
5
6
7
8
9
10
11
12
13
14
15
16
17
18
19
20
21
22
23
24
25
26

## SERVICE BRAKE - DISC ⊠
## FREIN PRIMAIRE - DISQUE ⊠
## DIENSTBREMSE - SCHEIBE ⊠
## FREIO MANUTENÇÃO - DISCO ⊠
## FRENO SERVICIO - DISCO ⊠

| No. | Part No. | Qty | Description | Description | Benennung | Descrição | Descripción |
|---|---|---|---|---|---|---|---|
| A | [1]1901442 | 1 | Brakehead assy | étrier frein ens | Bremskopf vollst | cabeca freio conj | cabeza freno conj |
| 1 | 641297 | 4 | Bleeder | robinet de purge | Ablasshahn | torneira de purga | robinete de purga |
| 2 | 666542 | 2 | Ring | anneau | Ring | anel | anillo |
| 3 | 1313426 | 2 | O-ring | joint torique | O Ring | anel-O | anillo-O |
| 4 | 1313427 | 2 | O-ring | joint torique | O Ring | anel-O | anillo-O |
| 5 | 17D000004 | 4 | Nut | écrou | Mutter | porca | tuerca |
| 6 | ‡1901444 | - | Shim | cale | Beilage | calço | planchita |
| 7 | ‡1901445 | - | Shim | cale | Beilage | calço | planchita |
| 8 | ‡1901446 | - | Shim | cale | Beilage | calço | planchita |
| 9 | 1901575 | 1 | Disc | disque | Scheibe | disco | disco |
| 10 | 1908800 | 1 | Mount | support | Befestigung | apoio | montura |
| 11 | 1990233 | 2 | Piston | piston | Kolben | pistão | pistón |
| 12 | 1990234 | 2 | Plug | bouchon | Stopfen | bujão | tapón |
| 13 | 1990235 | 2 | Guide | guide | Führungsstück | guia | guía |
| 14 | 1990236 | 2 | Spring | ressort | Feder | mola | resorte |
| 15 | 1990237 | 2 | Screw | vis | Schraube | parafuso | tornillo |
| 16 | 1990238 | 2 | Pin | goupille | Stift | pino | pasador |
| 17 | 1990240 | 1 | Housing | botier | Gehuse | carcaça | carcasa |
| 18 | 1990241 | 2 | Ring | anneau | Ring | anel | anillo |
| 19 | 1990242 | 2 | Collar | collier | Bund | colar | collar |
| 20 | [2]1990633 | 2 | Carrier | porteur | Trger | suporte | soporte |
| 21 | 17C000416 | 4 | Screw | vis | Schraube | parafuso | tornillo |
| 22 | 24E000008 | 8 | Lockwasher | rondelle frein | Sicherungsscheibe | arruela de pressão | arandela seguridad |
| 23 | 39D000008 | 4 | Nut | écrou | Mutter | porca | tuerca |
| 24 | [3]§--------- | 2 | Lining | garniture | Belag | lona | cinta |
| 25 | [3]§--------- | 10 | Rivet | rivet | Niet | rebite | remache |
| 26 | 18C000828 | 4 | Bolt | boulon | Bolzen | parafuso | bulón |

[1] Inc 1➞5,11➞21

[2] Inc 24&25

[3] See 20
[3] Voir 20
[3] Siehe 20
[3] Veja 20
[3] Vease 20

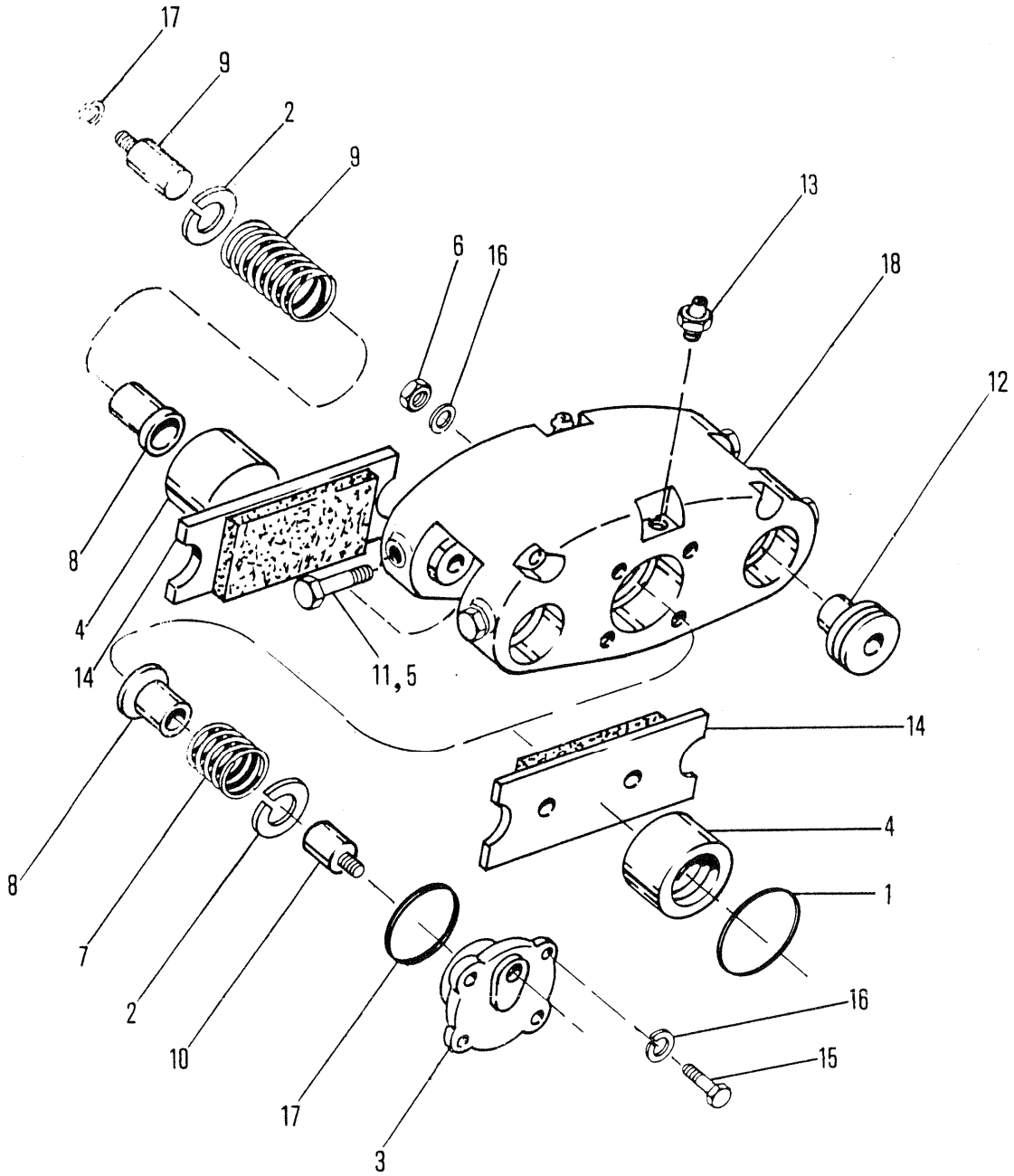
17
9
2
9
6
16
13
18
12
8
4
14
11, 5
14
8
4
7
1
2
16
10
15
17
3
5426TP

## SERVICE BRAKE - CALIPER DISC
## FREIN PRIMAIRE - DISQUE À COULISSE
## DIENSTBREMSE - TASTERSCHEIBE
## FREIO MANUTENÇÃO - CALIBRADOR DISCO
## FRENO SERVICIO - CALIBRADOR DISCO

| No. | Part No. | Qty | Description | Description | Benennung | Descrição | Descripción |
|---|---|---|---|---|---|---|---|
| A | [1]127107 | 1 | Caliper head | tête à coulisse | Tasterkopf | cabeça do calibr | cab calibrador |
| B | [2]840478 | 1 | Packing kit | ens demballage | Verpackungssatz | conj de embalagem | conj empaq |
| 1 | [3]§------ | 1 | Packing | garniture | Dichtung | gaxeta | empaquetadura |
| 2 | 661415 | 2 | Ring | anneau | Ring | anel | anillo |
| 3 | 840473 | 1 | Cap end | extrémité du chapeau | Kappenende | tampa do terminal | terminal de tapa |
| 4 | 840474 | 2 | Piston | piston | Kolben | pistão | pistón |
| 5 | 961901 | 4 | Bolt | boulon | Bolzen | parafuso | bulón |
| 6 | 891069 | 1 | Nut | écrou | Mutter | porca | tuerca |
| 7 | 891071 | 2 | Spring | ressort | Feder | mola | resorte |
| 8 | 891072 | 2 | Guide | guide | Führungsstück | guia | guía |
| 9 | 891073 | 1 | Adjuster | régleur | Einsteller | ajustador | regulador |
| 10 | 946479 | 1 | Guide | guide | Führungsstück | guia | guía |
| 11 | 947930 | 4 | Bolt | boulon | Bolzen | parafuso | bulón |
| 12 | 947931 | 4 | Pin | goupille | Stift | pino | pasador |
| 13 | 960837 | 4 | Bleed screw | vis de fuite | Lüftungsschraube | parafuso sangria | tornillo purga |
| 14 | 1916685 | 2 | Carrier | porteur | Trger | suporte | soporte |
| 15 | 1C000620 | 4 | Bolt | boulon | Bolzen | parafuso | bulón |
| 16 | 25E000017 | 5 | Washer | rondelle | Scheibe | arruela | arandela |
| 17 | [3]§--------- | 1 | Packing | garniture | Dichtung | gaxeta | empaquetadura |
| 18 | [4]§--------- | 1 | Housing | botier | Gehuse | carcaça | carcasa |

[1] Inc 1➡18

[2] Inc 1 & 17

[3] See item 5
[3] Voir article 5
[3] Siehe Punkt 5
[3] Vea item 5
[3] Vea item 5

[4] See item 1
[4] Voir article 1
[4] Siehe Punkt 1
[4] Vea item 1
[4] Vea item 1

666CUM 500E-101-CAC➡500G-2125-CAC
666GM 513E-101-CAC➡513G-2440-CAC
666GMGR 515A-101-CAC➡515A-315-CAC

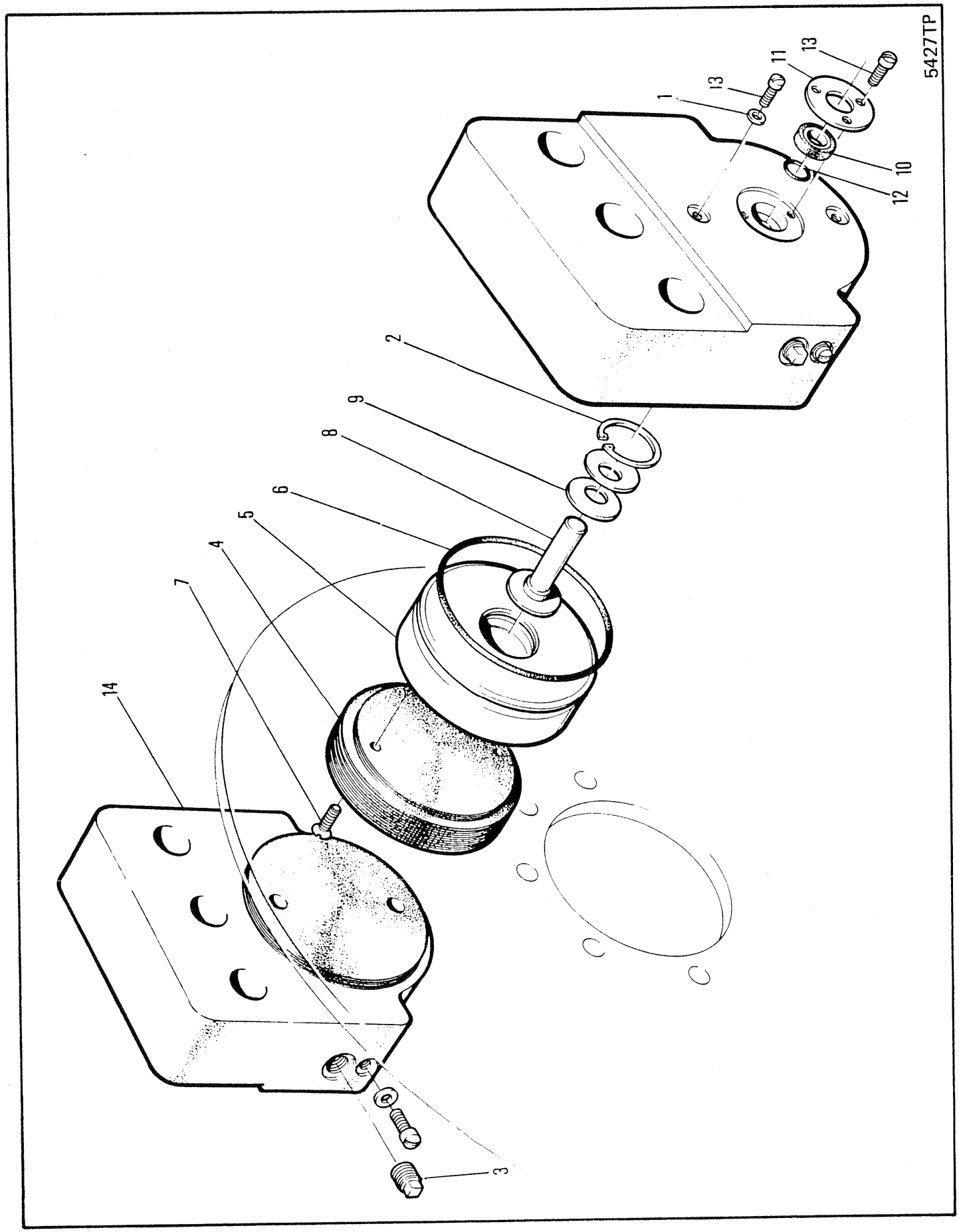
5427TP
1
2
3
4
5
6
7
8
9
10
11
12
13
13
14

## SERVICE BRAKE - DISC
## FREIN PRIMAIRE - DISQUE
## DIENSTBREMSE - SCHEIBE
## FREIO MANUTENÇÃO - DISCO
## FRENO SERVICIO - DISCO

| No. | Part No. | Qty | Description | Description | Benennung | Descrição | Descripción |
|---|---|---|---|---|---|---|---|
| A | [1]1927693 | 1 | Brake assy | frein ens | Bremse vollst | freio conj | freno conj |
| 1 | 875170 | 8 | Washer | rondelle | Scheibe | arruela | arandela |
| 2 | 954597 | 2 | Snap ring | circlips | Sperring | anel de trava | anillo de retención |
| 3 | 208805 | 2 | Screw | vis | Schraube | parafuso | tornillo |
| 4 | 1991210 | 2 | Lining | garniture | Belag | lona | cinta |
| 5 | 1991321 | 2 | Piston | piston | Kolben | pistão | pistón |
| 6 | 1991322 | 2 | O-ring | joint torique | O Ring | anel-O | anillo-O |
| 7 | 1991323 | 4 | Screw | vis | Schraube | parafuso | tornillo |
| 8 | 1991324 | 2 | Pin | goupille | Stift | pino | pasador |
| 9 | 1991325 | 4 | Spring | ressort | Feder | mola | resorte |
| 10 | 1991326 | 2 | Grip | poignée | Griff | punho | mango |
| 11 | 1991327 | 2 | Plate | plaque | Platte | placa | placa |
| 12 | 25K020012 | 2 | O-ring | joint torique | O Ring | anel-O | anillo-O |
| 13 | 42G001004 | 14 | Screw | vis | Schraube | parafuso | tornillo |
| 14 | [2]§--------- | - | Housing | botier | Gehuse | carcaça | carcasa |

[1] Inc 1, 2 & 4➡14

[2] See item A
[2] Voir article A
[2] Siehe Punkt A
[2] Vea item A
[2] Vea item A

666CUM 500G-2126-CAC➡500G-9999-CAC
666GM 513G-2441-CAC➡513G-9999-CAC
666GMGR 515A-316-CAC➡515A-9999-CAC

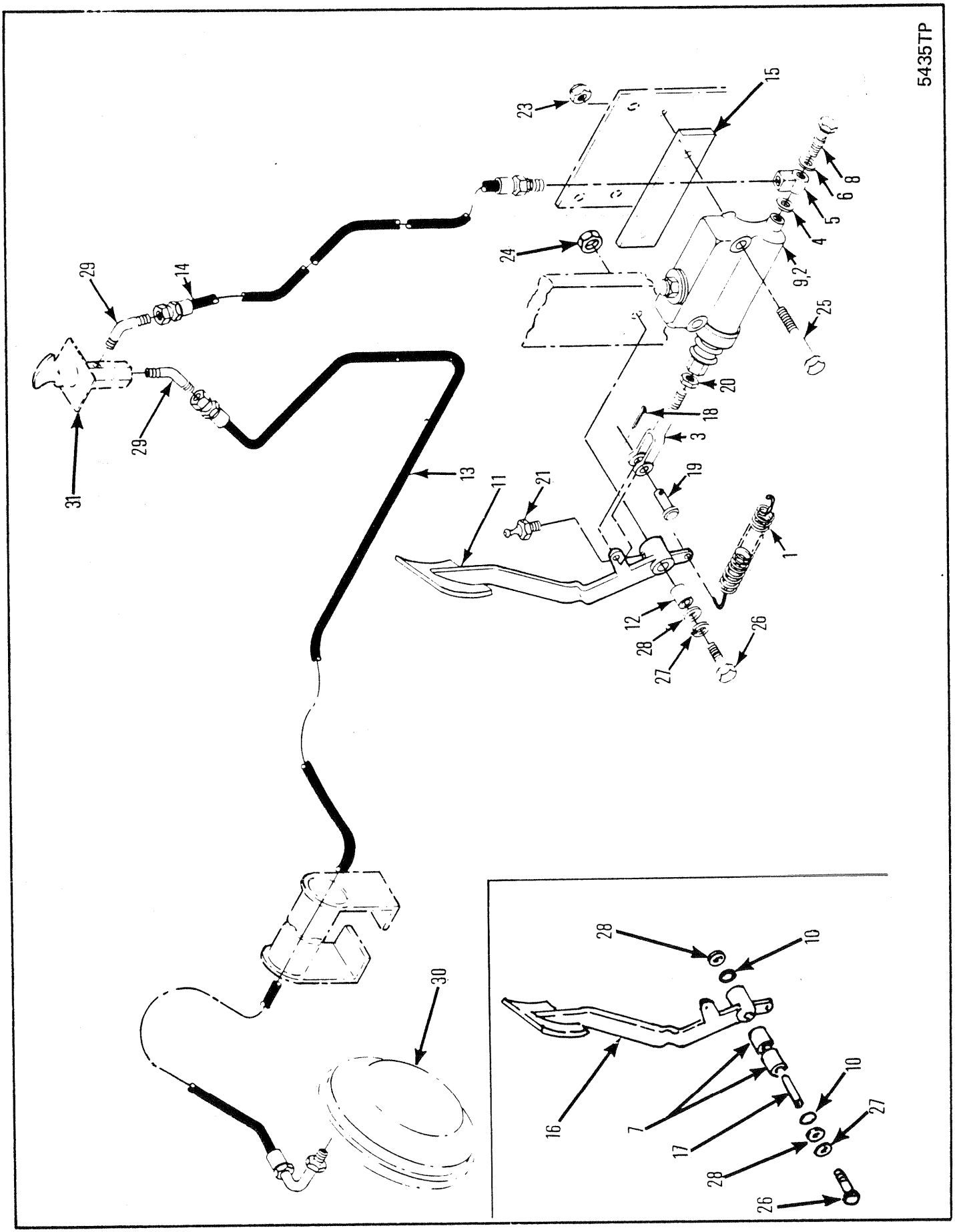
5435TP
15
23
8
6
5
4
24
9,2
25
29
14
20
18
3
29
19
13
11
21
1
31
12
28
26
27
30
28
10
16
7
10
17
27
28
26

# SERVICE BRAKE CONTROLS - DRUM
# TAMBOR DE CONTRÔLE DU FREIN DE SERVICE
# KONTROLLTROMMEL DER STANDARBREMSE
# TAMBOR DE CONTROLES DE FREIO DE SERVIÇIO
# TAMBOR DE CONTROLS DEL FRENO DE SERVICIO

| No. | Part No. | Qty | Description | Description | Benennung | Descrição | Descripción |
|---|---|---|---|---|---|---|---|
| 1 | **550301** | 1 | Spring | ressort | Feder | mola | resorte |
| 2 | **550401** | 1 | Cylinder | cylindre | Zylinder | cilindro | cilindro esclavo |
| 3 | **552377** | 1 | Clevis | étrier | Schkel | garfo | horquilla |
| 4 | **613750** | 1 | Gasket | garniture | Dichtung | gaxeta | empaquetadura |
| 5 | **620235** | 1 | Fitting | ajustage | Verbindung | ajuste | accesorio |
| 6 | **620238** | 1 | Gasket | garniture | Dichtung | gaxeta | empaquetadura |
| 7 | **675227** | 2 | Bearing | palier | Lager | mancal | cojinete |
| 8 | **692722** | 1 | Bolt | boulon | Bolzen | parafuso | bulón |
| 9 | **868586** | 1 | Repair kit | trousse de reparation | Reparatursatz | conjunto de reparo | juego de reparación |
| 10 | **1522535** | 2 | Wiper ring | anneau de came | Wischerring | anello limpador | anillo restregador |
| 11 | [1]**1900083** | 1 | Brake pedal | pédale de frein | Bremspedal | pedal do freio | pedal del freno |
| 12 | **1900710** | 1 | Sleeve | manchon | Muffe | luva | manguito |
| 13 | **1902050** | 1 | Hose | tuyau flexible | Schlauch | mangueira | manguera |
| 14 | **1902051** | 1 | Hose | tuyau flexible | Schlauch | mangueira | manguera |
| 15 | **1902617** | 1 | Spacer | entretoise | Distanzteil | espaçador | espaciador |
| 16 | **1916442** | 1 | Brake pedal | pédale de frein | Bremspedal | pedal do freio | pedal del freno |
| 17 | **1916718** | 1 | Sleeve | manchon | Muffe | luva | manguito |
| 18 | **1F0000412** | 1 | Pin | goupille | Stift | pino | pasador |
| 19 | **4F0008127** | 1 | Pin | goupille | Stift | pino | pasador |
| 20 | **8D0000007** | 1 | Nut | écrou | Mutter | porca | tuerca |
| 21 | **10H000025** | 1 | Fitting | ajustage | Verbindung | ajuste | accesorio |
| 22 | †**18C001064** | 1 | Bolt | boulon | Bolzen | parafuso | bulón |
| 23 | **18D000006** | 2 | Nut | écrou | Mutter | porca | tuerca |
| 24 | **18D000010** | 1 | Nut | écrou | Mutter | porca | tuerca |
| 25 | **18C000656** | 2 | Bolt mounting | montage des boulons | Bolzenbefestigung | paraf de montagem | tornilla de montaje |
| 26 | **18C001072** | 1 | Bolt | boulon | Bolzen | parafuso | bulón |
| 27 | **24E000010** | 1 | Lockwasher | rondelle frein | Sicherungsscheibe | arruela de pressão | arandela seguridad |
| 28 | **25E000026** | 2 | Washer | rondelle | Scheibe | arruela | arandela |
| 29 | **84F000003** | 2 | Elbow | coude | Winkelrohr | cotovêlo | codo |
| 30 | ○--------- | 1 | Brake | frein | Bremse | freio | freno |
| 31 | [2]○--------- | 1 | Valve | soupape | Ventil | válvula | válvula |
| 32 | †**860205** | 1 | Filler cap | bouchon de remplis | Fülldeckel | tampa de abastesc | tapa de llenadao |

[1] Service with pedal 1916442 as per corner illustration
[1] Réparer avec la pédale 1916442 comme l'indique la figure sur le coin
[1] Mit Pedal 1916442 gemäss Eckabbildung warten
[1] Prestar nanutenção com pedal 1916442 conforme a ilustração do conto da página
[1] Mantener con pedal 1916442 segun ilustración de la esquina

[2] Ref B4 10020 & B4 10040

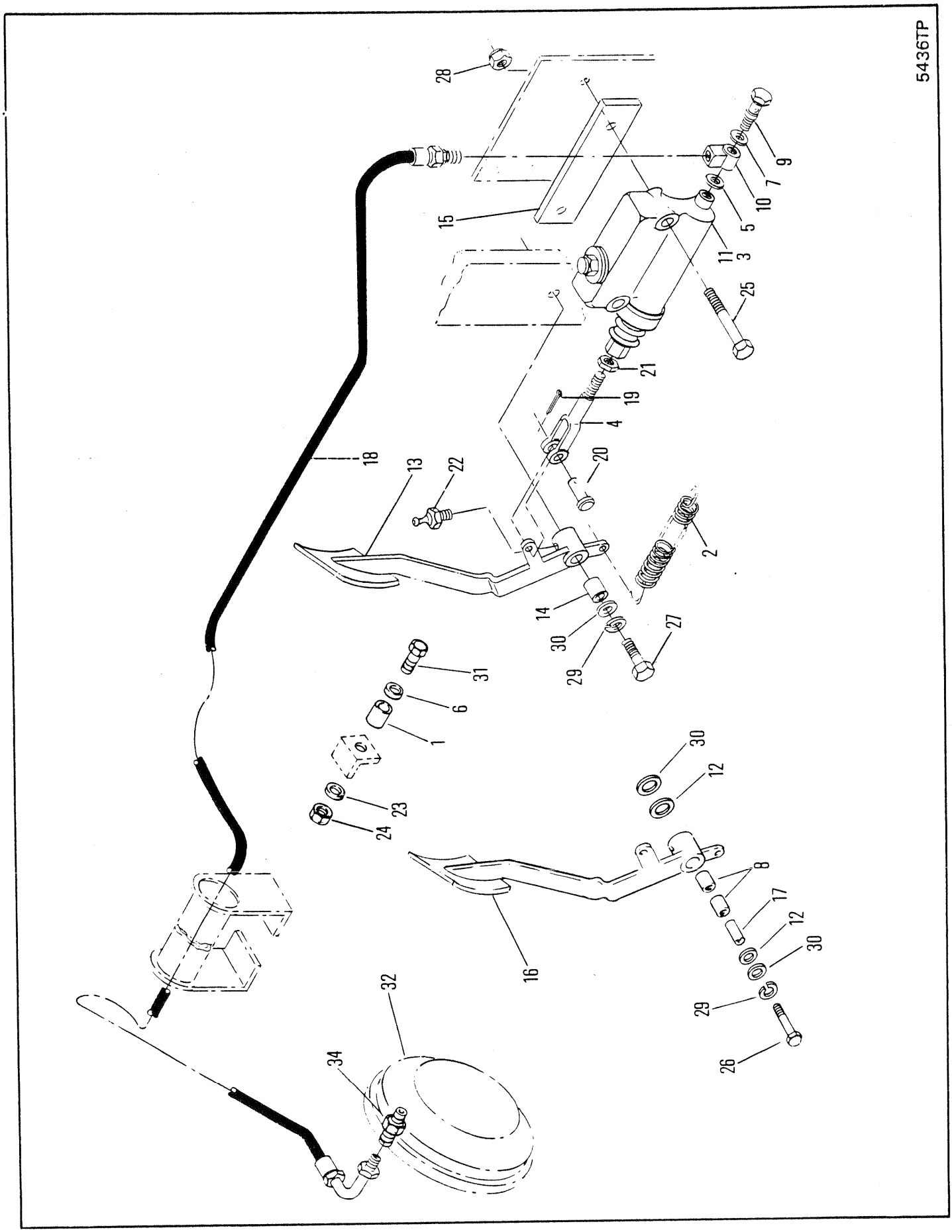
5436TP
28
15
9
7
10
5
11
3
25
21
19
4
20
18
13
22
2
14
30
29
27
31
6
1
23
24
30
12
8
17
12
30
29
26
16
32
34

# SERVICE BRAKE CONTROLS - DRUM
# TAMBOR DE CONTRÔLE DU FREIN DE SERVICE
# KONTROLLTROMMEL DER STANDARBREMSE
# TAMBOR DE CONTROLES DE FREIO DE SERVIÇIO
# TAMBOR DE CONTROLS DEL FRENO DE SERVICIO

| No. | Part No. | Qty | Description | Description | Benennung | Descrição | Descripción |
|---|---|---|---|---|---|---|---|
| 1 | **302568** | 1 | Bumper | butoir | Stossfnger | batente | tope |
| 2 | **550301** | 1 | Spring | ressort | Feder | mola | resorte |
| 3 | **550401** | 1 | Cylinder | cylindre | Zylinder | cilindro | cilindro esclavo |
| 4 | **552377** | 1 | Clevis | étrier | Schkel | garfo | horquilla |
| 5 | **613750** | 1 | Gasket | garniture | Dichtung | gaxeta | empaquetadura |
| 6 | **616775** | 1 | Washer | rondelle | Scheibe | arruela | arandela |
| 7 | **620238** | 1 | Gasket | garniture | Dichtung | gaxeta | empaquetadura |
| 8 | **675227** | 2 | Bearing | palier | Lager | mancal | cojinete |
| 9 | **692722** | 1 | Bolt | boulon | Bolzen | parafuso | bulón |
| 10 | **620235** | 1 | Fitting | ajustage | Verbindung | ajuste | accesorio |
| 11 | **868586** | 1 | Repair kit | trousse de reparation | Reparatursatz | conjunto de reparo | juego de reparación |
| 12 | **1522535** | 2 | Wiper ring | anneau de came | Wischerring | anello limpador | anillo restregador |
| 13 | [1]**1900083** | 1 | Pedal brake | pédale frein | Pedal Brems | pedal freio | pedal freno |
| 14 | **1900710** | 1 | Sleeve | manchon | Muffe | luva | manguito |
| 15 | **1902617** | 1 | Spacer | entretoise | Distanzteil | espaçador | espaciador |
| 16 | **1916442** | 1 | Pedal brake | pédale frein | Pedal Brems | pedal freio | pedal freno |
| 17 | **1916718** | 1 | Sleeve | manchon | Muffe | luva | manguito |
| 18 | **1916850** | 1 | Hose | tuyau flexible | Schlauch | mangueira | manguera |
| 19 | **1F0000412** | 1 | Pin | goupille | Stift | pino | pasador |
| 20 | **4F0008127** | 1 | Pin | goupille | Stift | pino | pasador |
| 21 | **8D0000007** | 1 | Nut | écrou | Mutter | porca | tuerca |
| 22 | **10H000025** | 1 | Fitting | ajustage | Verbindung | ajuste | accesorio |
| 23 | **13E000010** | 1 | Lockwasher | rondelle frein | Sicherungsscheibe | arruela de pressão | arandela seguridad |
| 24 | **14D000010** | 1 | Nut | écrou | Mutter | porca | tuerca |
| 25 | **18C001064** | 1 | Bolt | boulon | Bolzen | parafuso | bulón |
| 26 | **18D000006** | 2 | Nut | écrou | Mutter | porca | tuerca |
| 27 | **18C000656** | 2 | Bolt | boulon | Bolzen | parafuso | bulón |
| 28 | **18C001072** | 1 | Bolt | boulon | Bolzen | parafuso | bulón |
| 29 | **24E000010** | 1 | Lockwasher | rondelle frein | Sicherungsscheibe | arruela de pressão | arandela seguridad |
| 30 | **25E000026** | 1 | Washer | rondelle | Scheibe | arruela | arandela |
| 31 | **86G001010** | 1 | Screw | vis | Schraube | parafuso | tornillo |
| 32 | [2]--------- | 1 | Brake | frein | Bremse | freio | freno |
| 33 | †**860205** | 1 | Filler cap | bouchon de remplis | Fülldeckel | tampa de abastesc | tapa de llenadao |
| 34 | **15K000004** | 1 | Fitting | ajustage | Verbindung | ajuste | accesorio |

[1] Service with pedal 1916442 as per corner illustration
[1] Réparer avec la pédale 1916442 comme l'indique la figure sur le coin
[1] Mit Pedal 1916442 gemäss Eckabbildung warten
[1] Prestar nanutenção com pedal 1916442 comforme a ilustração do conto da página
[1] Mantener con pedal 1916442 segun ilustración de la esquina

[2] Ref A7 10000

666CUM 500E-101-CAC→500E-9999-CAC
666GM 513E-101-CAC→513E-9999-CAC

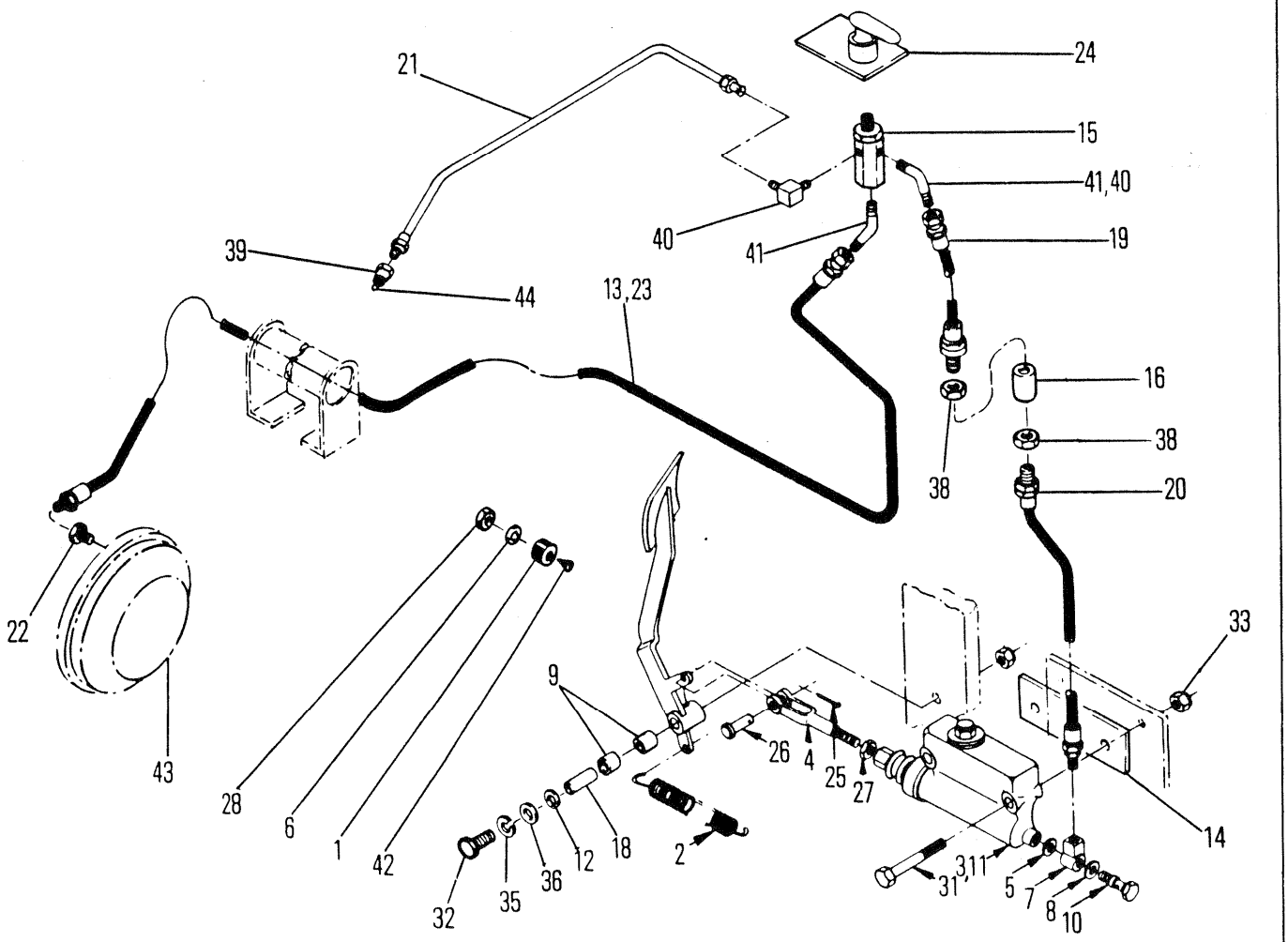
21
24
15
41,40
40
41
19
39
44
13,23
16
38
38
20
22
33
9
43
28
6
1
42
26
4
25
27
14
18
2
12
36
35
32
31
311
5
7
8
10
5437TP

# SERVICE BRAKE CONTROLS - DRUM
# TAMBOR DE CONTRÔLE DU FREIN DE SERVICE
# KONTROLLTROMMEL DER STANDARBREMSE
# TAMBOR DE CONTROLES DE FREIO DE SERVIÇIO
# TAMBOR DE CONTROLS DEL FRENO DE SERVICIO

| No. | Part No. | Qty | Description | Description | Benennung | Descrição | Descripción |
|---|---|---|---|---|---|---|---|
| 1 | **302568** | 1 | Bumper | butoir | Stossfnger | batente | tope |
| 2 | **550301** | 1 | Spring | ressort | Feder | mola | resorte |
| 3 | **550401** | 1 | Cylinder | cylindre | Zylinder | cilindro | cilindro esclavo |
| 4 | **552377** | 1 | Clevis | étrier | Schkel | garfo | horquilla |
| 5 | **613750** | 1 | Gasket | garniture | Dichtung | gaxeta | empaquetadura |
| 6 | **616775** | 1 | Washer | rondelle | Scheibe | arruela | arandela |
| 7 | **620235** | 1 | Fitting | ajustage | Verbindung | ajuste | accesorio |
| 8 | **620238** | 1 | Gasket | garniture | Dichtung | gaxeta | empaquetadura |
| 9 | **675227** | 2 | Bearing | palier | Lager | mancal | cojinete |
| 10 | **692722** | 1 | Bolt | boulon | Bolzen | parafuso | bulón |
| 11 | **868586** | 1 | Repair kit | trousse de reparation | Reparatursatz | conjunto de reparo | juego de reparación |
| 12 | **1522535** | 2 | Wiper ring | anneau de came | Wischerring | anello limpador | anillo restregador |
| 13 | **1902050** | 1 | Hose | tuyau flexible | Schlauch | mangueira | manguera |
| 14 | **1902617** | 1 | Spacer | entretoise | Distanzteil | espaçador | espaciador |
| 15 | **1904639** | 1 | Lock valve | soup de sécurité | Sichereitsventil | válvula de trava | vélvula de seguridad |
| 16 | **1913645** | 1 | Junction box | bote de jonction | Anschlussdose | caixa de junção | caja de uniones |
| 17 | **1916442** | 1 | Brake pedal | pédale de frein | Bremspedal | pedal do freio | pedal del freno |
| 18 | **1916718** | 1 | Sleeve | manchon | Muffe | luva | manguito |
| 19 | **1917198** | 1 | Tube | tube | Rohr | tubo | tubo |
| 20 | **1917199** | 1 | Tube | tube | Rohr | tubo | tubo |
| 21 | [1]**1919062** | 1 | Tube | tube | Rohr | tubo | tubo |
| 22 | **1921908** | 1 | Fitting | ajustage | Verbindung | ajuste | accesorio |
| 23 | [2]**1921909** | 1 | Hose | tuyau flexible | Schlauch | mangueira | manguera |
| 24 | **1990604** | 1 | Cam lever | levier came | Nockenhebel | alavanca came | palanca leva |
| 25 | **1F0000412** | 1 | Cotter pin | goupille fendue | Splint | contrapino | chaveta dos patos |
| 26 | **4F0008127** | 1 | Clevis pin | goupille chape | Schkelstift | pino garfo | pasador horquilla |
| 27 | **8D0000007** | 1 | Nut | écrou | Mutter | porca | tuerca |
| 28 | **14D000010** | 1 | Nut | écrou | Mutter | porca | tuerca |
| 29 | **15K000004** | 1 | Fitting | ajustage | Verbindung | ajuste | accesorio |
| 30 | **18C001064** | 1 | Bolt | boulon | Bolzen | parafuso | bulón |
| 31 | **18D000006** | 2 | Nut | écrou | Mutter | porca | tuerca |
| 32 | [1]†**23E000006** | 1 | Lockwasher | rondelle frein | Sicherungsscheibe | arruela de pressão | arandela seguridad |
| 33 | †**18C000616** | 1 | Bolt | boulon | Bolzen | parafuso | bulón |
| 34 | **18C000656** | 2 | Bolt | boulon | Bolzen | parafuso | bulón |
| 35 | **24E000010** | 1 | Lockwasher | rondelle frein | Sicherungsscheibe | arruela de pressão | arandela seguridad |
| 36 | **25E000026** | 2 | Washer | rondelle | Scheibe | arruela | arandela |
| 37 | [1]†**30H000016** | 1 | Clip | attache | Schelle | braçadeira | abrazadera |
| 38 | **59F000003** | 2 | Fitting | ajustage | Verbindung | ajuste | accesorio |
| 39 | [1]**60F000003** | 1 | Connector | raccord | Verbindungsstück | ligador | conector |
| 40 | [1]**62F000003** | 2 | Elbow | coude | Winkelrohr | cotovêlo | codo |
| 41 | **84F000003** | 2 | Elbow | coude | Winkelrohr | cotovêlo | codo |
| 42 | **86G001010** | 1 | Screw | vis | Schraube | parafuso | tornillo |
| 43 | ○--------- | 1 | Brake | frein | Bremse | freio | freno |
| 44 | [1]§--------- | 1 | Bleeder | robinet de purge | Ablasshahn | torneira de purga | robinete de purga |
| 45 | †**860205** | 1 | Filler cap | bouchon de remplis | Fülldeckel | tampa de abastesc | tapa de llenadao |

[1] Used on 508B-641-CAC&➡, 514F-2371-CAC&➡, 513F-1404-CAC, 500F-1201-CAC except 500F-1205 & 1206-CAC, for installation on machines prior to above S/N break refer to R.S.G. 167

[1] Utilisé sur les 508B-641-CAC&➡, 514F-2371-CAC&➡, 513F-1404-CAC, 500F-1201-CAC, à léxception des 500F-1205 & 1206-CAC, pour l'installation sur les machines précedent la coupure des numéros de série ci desus Se référer au R.S.G. 167

[1] Wird für 508B-641-CAC&➡, 514F-2371-CAC&➡, 513F-1404-CAC, 500F-1201-CAC ausser 500F-1205 & 1206-CAC. zum Einbau in Maschinen vor der Seriennummeränderung benutzt Ref. R.S.G.167

[1] Usados com 508B-641-CAC&➡, 514F-2371-CAC&➡, 513F-1404-CAC, 500F-1201-CAC com exce[2]o do canto de 500F-1205 & 1206-CAC, para instalação em máquinas precedendo a mudance do numero de série. Ref a R.S.G. 167

[1] Usar con 508B-641-CAC&➡, 514F-2371-CAC&➡, 513F-1404-CAC, 500F-1201-CAC excepto 500F-1205 & 1206-CAC, para instalación en máquinas anteriores al camblo del no. serie. Ref. R.S.G. 167

[2] 666 GR

666CUM 500F-101-CAC➡500G-9999-CAC
666GM 513F-101-CAC➡513G-9999-CAC

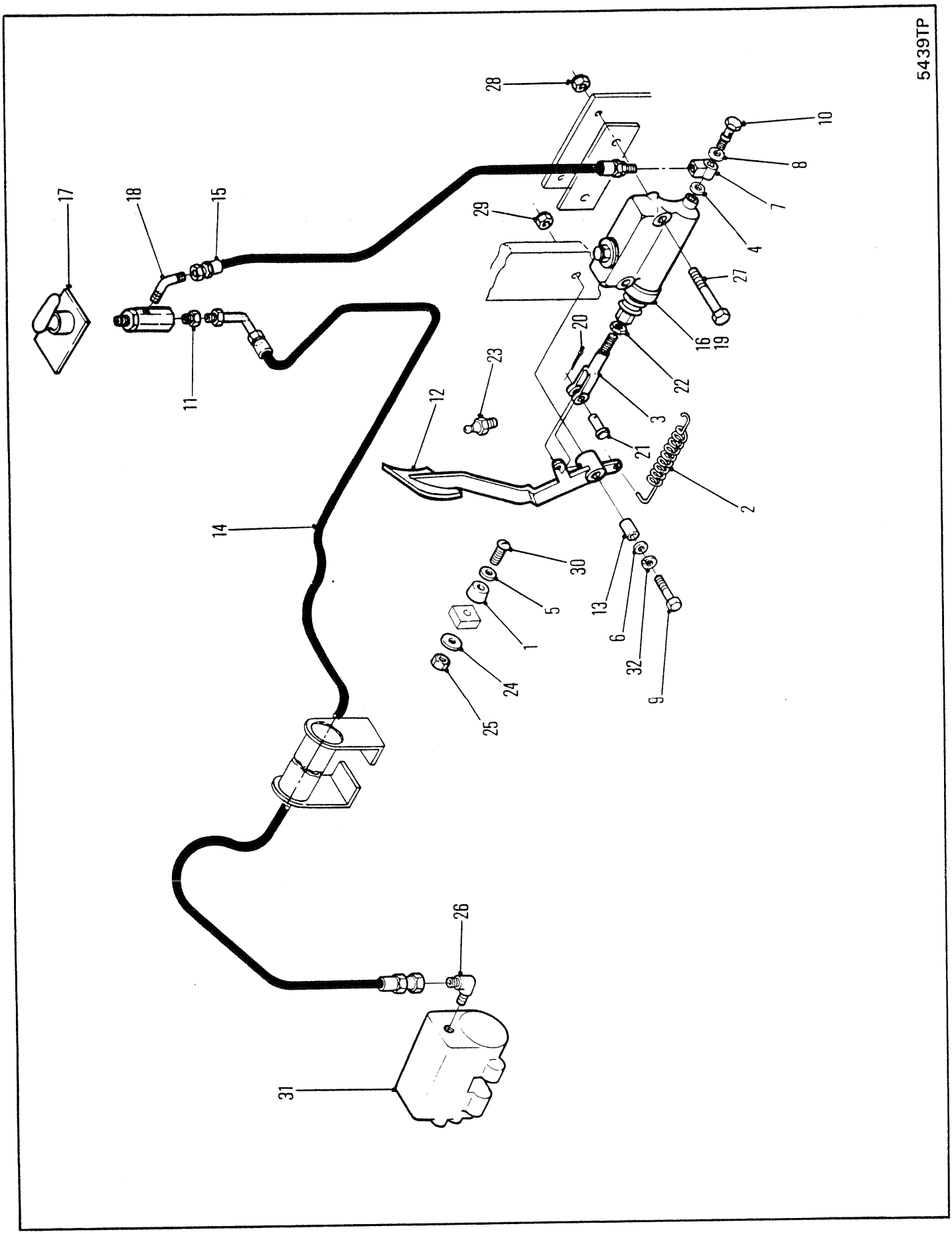
5439TP
28
10
8
7
4
29
27
16
19
20
22
3
23
12
21
2
17
18
15
11
14
30
5
1
13
6
32
9
24
25
26
31

# SERVICE BRAKE CONTROLS - DISC
# DISC DE CONTRÔLES DU FREIN DE SERVICE
# KONTROLLSCHEIBE DER STANDBREMSE
# DISCO DE CONTROLE DE FREIO DE SERVIÇIO
# DISCO DE CONTROL DEL FRENO DE SERVICIO

| No. | Part No. | Qty | Description | Description | Benennung | Descrição | Descripción |
|---|---|---|---|---|---|---|---|
| 1 | **302568** | 1 | Bumper | butoir | Stossfnger | batente | tope |
| 2 | **550301** | 1 | Spring | ressort | Feder | mola | resorte |
| 3 | **552377** | 1 | Clevis | étrier | Schkel | garfo | horquilla |
| 4 | **613750** | 1 | Gasket | garniture | Dichtung | gaxeta | empaquetadura |
| 5 | **616775** | 1 | Washer | rondelle | Scheibe | arruela | arandela |
| 6 | **619032** | 1 | Washer | rondelle | Scheibe | arruela | arandela |
| 7 | **620235** | 1 | Fitting | ajustage | Verbindung | ajuste | accesorio |
| 8 | **620238** | 1 | Gasket | garniture | Dichtung | gaxeta | empaquetadura |
| 9 | **18C001064** | 1 | Bolt | boulon | Bolzen | parafuso | bulón |
| 10 | **692722** | 1 | Bolt | boulon | Bolzen | parafuso | bulón |
| 11 | **59F000003** | 1 | Connector | raccord | Verbindungsstück | ligador | conector |
| 12 | [1]**1900083** | 1 | Brake pedal | pédale de frein | Bremspedal | pedal do freio | pedal del freno |
| 13 | **1900710** | 1 | Sleeve | manchon | Muffe | luva | manguito |
| 14 | **1902050** | 1 | Hose | tuyau flexible | Schlauch | mangueira | manguera |
| 15 | **1902051** | 1 | Hose | tuyau flexible | Schlauch | mangueira | manguera |
| 16 | **1902106** | 1 | Cylinder | cylindre | Zylinder | cilindro | cilindro esclavo |
| 17 | [2]○------- | 1 | Valve | soupape | Ventil | válvula | válvula |
| 18 | **84F000003** | 1 | Elbow | coude | Winkelrohr | cotovêlo | codo |
| 19 | **1916765** | 1 | Repair kit | trousse de reparation | Reparatursatz | conjunto de reparo | juego de reparación |
| 20 | **1F000412** | 1 | Pin | goupille | Stift | pino | pasador |
| 21 | **4F008127** | 1 | Pin | goupille | Stift | pino | pasador |
| 22 | **8D000007** | 1 | Nut | écrou | Mutter | porca | tuerca |
| 23 | **10H000025** | 1 | Fitting | ajustage | Verbindung | ajuste | accesorio |
| 24 | **13E000010** | 1 | Lockwasher | rondelle frein | Sicherungsscheibe | arruela de pressão | arandela seguridad |
| 25 | **14D000010** | 1 | Nut | écrou | Mutter | porca | tuerca |
| 26 | **17K000003** | 1 | Fitting | ajustage | Verbindung | ajuste | accesorio |
| 27 | **18C000656** | 2 | Bolt | boulon | Bolzen | parafuso | bulón |
| 28 | **18D000006** | 2 | Nut | écrou | Mutter | porca | tuerca |
| 29 | **18D000010** | 1 | Nut | écrou | Mutter | porca | tuerca |
| 30 | **86G001010** | 1 | Screw | vis | Schraube | parafuso | tornillo |
| 31 | ○--------- | 1 | Brake | frein | Bremse | freio | freno |
| 32 | **24E000010** | 1 | Lockwasher | rondelle frein | Sicherungsscheibe | arruela de pressão | arandela seguridad |

[1] Service with pedal 1916442 as per corner illustration
[1] Réparer avec la pédale 1916442 comme l'indique la figure sur le coin
[1] Mit Pedal 1916442 gemäss Eckabbildung warten
[1] Prestar nanuten[2]o com pedal 1916442 conforme a ilustra[2]o do conto da página
[1] Mantener con pedal 1916442 segun ilustración de la esquina

[2] See Group B4 10040, B4 10130 & B4 10140

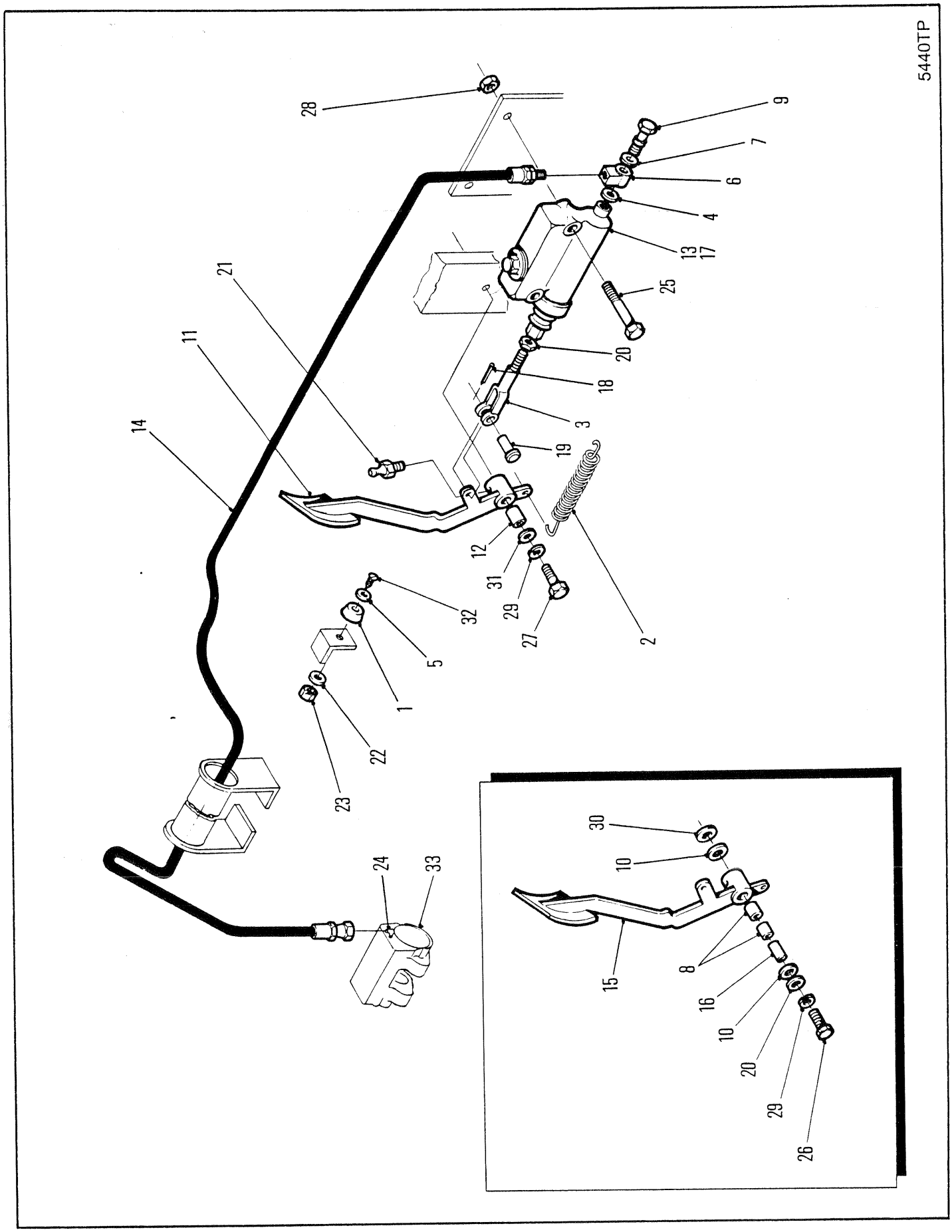
5440TP
28
9
7
6
4
13
17
25
20
18
3
19
21
11
14
12
31
29
27
2
32
5
1
22
23
24
33
30
10
15
8
16
10
20
29
26

## SERVICE BRAKE CONTROLS - DISC ⊠
## DISC DE CONTRÔLES DU FREIN DE SERVICE ⊠
## KONTROLLSCHEIBE DER STANDBREMSE ⊠
## DISCO DE CONTROLE DE FREIO DE SERVIÇIO ⊠
## DISCO DE CONTROL DEL FRENO DE SERVICIO ⊠

| No. | Part No. | Qty | Description | Description | Benennung | Descrição | Descripción |
|---|---|---|---|---|---|---|---|
| 1 | **302568** | 1 | Bumper | butoir | Stossfnger | batente | tope |
| 2 | **550301** | 1 | Spring | ressort | Feder | mola | resorte |
| 3 | **552377** | 1 | Clevis | étrier | Schkel | garfo | horquilla |
| 4 | **613750** | 1 | Gasket | garniture | Dichtung | gaxeta | empaquetadura |
| 5 | **616775** | 1 | Washer | rondelle | Scheibe | arruela | arandela |
| 6 | **620235** | 1 | Fitting | ajustage | Verbindung | ajuste | accesorio |
| 7 | **620238** | 1 | Gasket | garniture | Dichtung | gaxeta | empaquetadura |
| 8 | **675227** | 1 | Bearing | palier | Lager | mancal | cojinete |
| 9 | **692722** | 1 | Bolt | boulon | Bolzen | parafuso | bulón |
| 10 | **1522535** | 2 | Wiper ring | anneau de came | Wischerring | anello limpador | anillo restregador |
| 11 | [1]**1900083** | 1 | Brake pedal | pédale de frein | Bremspedal | pedal do freio | pedal del freno |
| 12 | **1900710** | 1 | Sleeve | manchon | Muffe | luva | manguito |
| 13 | **1902106** | 1 | Cylinder | cylindre | Zylinder | cilindro | cilindro esclavo |
| 14 | **1911801** | 1 | Hose | tuyau flexible | Schlauch | mangueira | manguera |
| 15 | [2]**1916442** | 1 | Brake pedal | pédale de frein | Bremspedal | pedal do freio | pedal del freno |
| 16 | **1916718** | 1 | Sleeve | manchon | Muffe | luva | manguito |
| 17 | **1916765** | 1 | Repair kit | trousse de reparation | Reparatursatz | conjunto de reparo | juego de reparación |
| 18 | **1F0000412** | 1 | Pin | goupille | Stift | pino | pasador |
| 19 | **4F0008127** | 1 | Pin | goupille | Stift | pino | pasador |
| 20 | **8D0000007** | 1 | Nut | écrou | Mutter | porca | tuerca |
| 21 | **10H000025** | 1 | Fitting | ajustage | Verbindung | ajuste | accesorio |
| 22 | **13F000010** | 1 | Lockwasher | rondelle frein | Sicherungsscheibe | arruela de pressão | arandela seguridad |
| 23 | **14D000010** | 1 | Nut | écrou | Mutter | porca | tuerca |
| 24 | **17K000003** | 1 | Fitting | ajustage | Verbindung | ajuste | accesorio |
| 25 | **18C001064** | 1 | Bolt | boulon | Bolzen | parafuso | bulón |
| 26 | **18D000006** | 2 | Nut | écrou | Mutter | porca | tuerca |
| 27 | **18C000656** | 2 | Bolt | boulon | Bolzen | parafuso | bulón |
| 28 | **18C001072** | 1 | Bolt | boulon | Bolzen | parafuso | bulón |
| 29 | **24E000010** | 1 | Lockwasher | rondelle frein | Sicherungsscheibe | arruela de pressão | arandela seguridad |
| 30 | **25E000026** | 2 | Washer | rondelle | Scheibe | arruela | arandela |
| 31 | **25E000027** | 1 | Washer | rondelle | Scheibe | arruela | arandela |
| 32 | **86G001010** | 1 | Screw | vis | Schraube | parafuso | tornillo |
| 33 | [3]--------- | 1 | Brake | frein | Bremse | freio | freno |

[1] Service with pedal 1916442 as per corner illustration
[1] Réparer avec la pédale 1916442 comme l'indique la figure sur le coin
[1] Mit Pedal 1916442 gemäss Eckabbildung warten
[1] Prestar nanuten²o com pedal 1916442 conforme a ilustra²o do conto da página
[1] Mantener con pedal 1916442 segun ilustración de la esquina

[2] □513E-1226-CAC&➡, 500E-966-CAC&➡

[3] Ref A7 10000

666CUM 500E-101-CAC➡500G-2125-CAC
666GM 513E-101-CAC➡513G-2440-CAC
666GMGR 515A-101-CAC➡515A-315-CAC

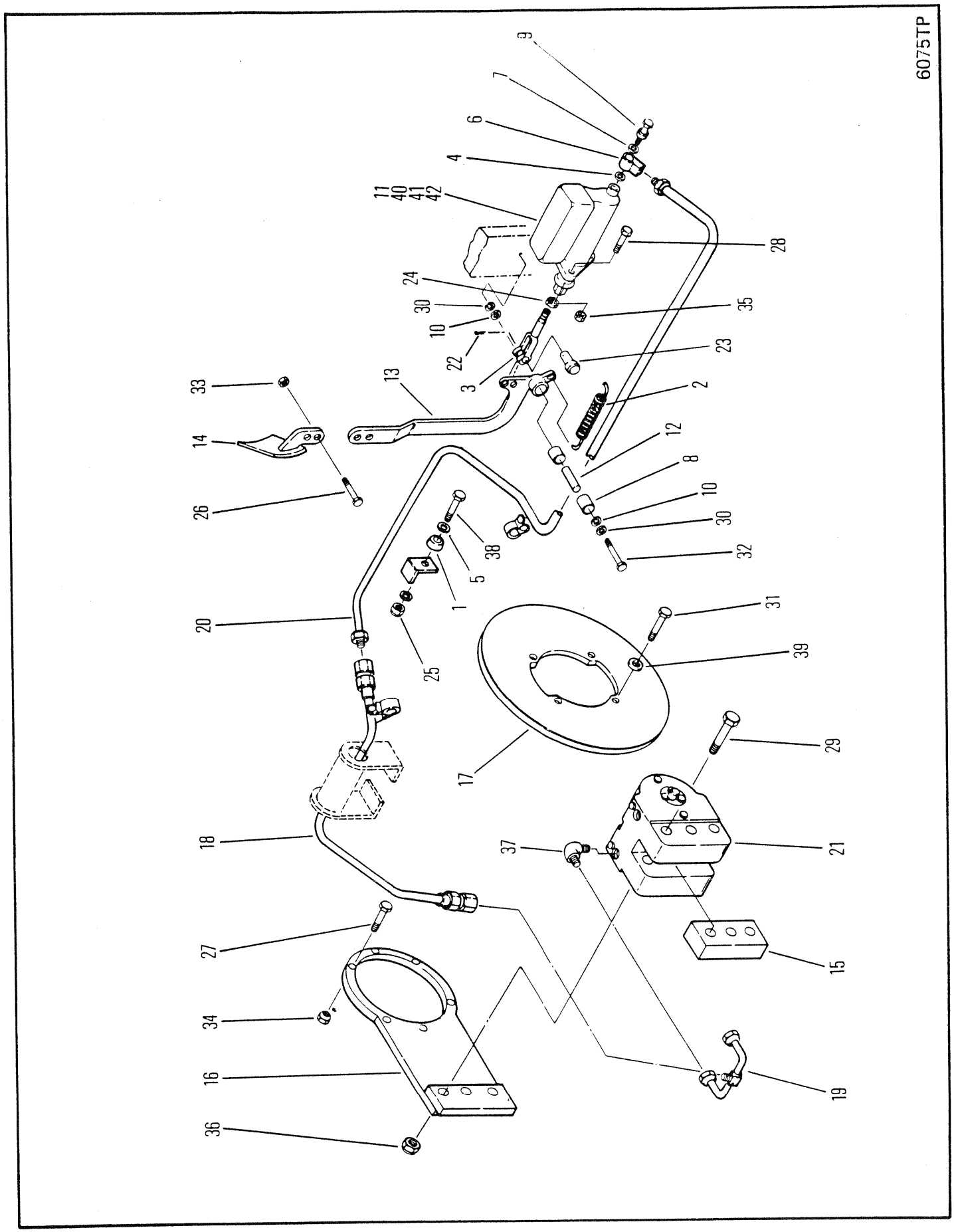
6075TP
9
7
6
4
11
40
41
42
28
24
30
10
35
22
23
3
13
33
2
14
12
8
10
26
30
38
32
5
1
20
31
25
39
17
29
18
37
21
27
15
34
16
19
36

# SERVICE BRAKE CONTROLS - DISC
# DISC DE CONTRÔLES DU FREIN DE SERVICE
# KONTROLLSCHEIBE DER STANDBREMSE
# DISCO DE CONTROLE DE FREIO DE SERVIÇIO
# DISCO DE CONTROL DEL FRENO DE SERVICIO

| No. | Part No. | Qty | Description | Description | Benennung | Descrição | Descripción |
|---|---|---|---|---|---|---|---|
| 1 | **302568** | 1 | Bumper | butoir | Stossfnger | batente | tope |
| 2 | **550301** | 1 | Spring | ressort | Feder | mola | resorte |
| 3 | **1926869** | 1 | Clevis | étrier | Schkel | garfo | horquilla |
| 4 | **613750** | 1 | Gasket | garniture | Dichtung | gaxeta | empaquetadura |
| 5 | **616775** | 1 | Washer | rondelle | Scheibe | arruela | arandela |
| 6 | **620235** | 1 | Fitting | ajustage | Verbindung | ajuste | accesorio |
| 7 | **620238** | 1 | Gasket | garniture | Dichtung | gaxeta | empaquetadura |
| 8 | **675227** | 2 | Bearing | palier | Lager | mancal | cojinete |
| 9 | **692722** | 1 | Bolt | boulon | Bolzen | parafuso | bulón |
| 10 | **1522535** | 2 | Wiper ring | anneau de came | Wischerring | anello limpador | anillo restregador |
| 11 | **1926324** | 1 | Master cylinder | mate cylindre | Hauptzylinder | cilindro mestre | cilindro maestro |
| 12 | **1916718** | 1 | Sleeve | manchon | Muffe | luva | manguito |
| 13 | **1919809** | 1 | Brake arm | levier de frein | Bremsarm | braca de freio | brazo del freno |
| 14 | **1919811** | 1 | Brake pedal | pédale de frein | Bremspedal | pedal do freio | pedal del freno |
| 15 | **1920971** | 1 | Spacer plate | plaque dentretoise | Abstandplatte | chapa espacadora | placa espdora |
| 16 | **1920974** | 1 | Mounting plate | plaque de fixation | Befestigungsplatte | placa de fixação | placa de montage |
| 17 | **1920975** | 1 | Brake disc | disque frein | Bremsscheibe | disco freio | disco freno |
| 18 | **1924485** | 1 | Hose | tuyau flexible | Schlauch | mangueira | manguera |
| 19 | **1924246** | 1 | Brake tube | tube de frien | Bremsrohr | tubo de freio | tubo del freno |
| 20 | **1926421** | 1 | Tube | tube | Rohr | tubo | tubo |
| 21 | [2]--------- | 1 | Hydraulic brake | frein hydraulique | Hydraulische bremse | freio hidraulico | freno hidraulico |
| 22 | **1F0000412** | 1 | Cotter pin | goupille fendue | Splint | contrapino | chaveta dos patos |
| 23 | **4F0008127** | 1 | Clevis pin | goupille chape | Schkelstift | pino garfo | pasador horquilla |
| 24 | **8D0000007** | 1 | Nut | écrou | Mutter | porca | tuerca |
| 25 | **14D000010** | 1 | Nut | écrou | Mutter | porca | tuerca |
| 26 | **17C000624** | 2 | Bolt | boulon | Bolzen | parafuso | bulón |
| 27 | **17C000744** | 6 | Bolt | boulon | Bolzen | parafuso | bulón |
| 28 | **18C000656** | 2 | Bolt | boulon | Bolzen | parafuso | bulón |
| 29 | **18C014128** | 3 | Bolt | boulon | Bolzen | parafuso | bulón |
| 30 | **27E000010** | 2 | Washer | rondelle | Scheibe | arruela | arandela |
| 31 | **34C000820** | 4 | Bolt | boulon | Bolzen | parafuso | bulón |
| 32 | **33C001064** | 1 | Bolt | boulon | Bolzen | parafuso | bulón |
| 33 | **59D000006** | 2 | Nut | écrou | Mutter | porca | tuerca |
| 34 | **59D000007** | 6 | Nut | écrou | Mutter | porca | tuerca |
| 35 | **60D000006** | 2 | Locknut | contre-écrou | Gegenmutter | contra porca | contratuerca |
| 36 | **60D000014** | 3 | Nut | écrou | Mutter | porca | tuerca |
| 37 | **1319807** | 2 | Fitting | ajustage | Verbindung | ajuste | accesorio |
| 38 | **86G001010** | 1 | Screw | vis | Schraube | parafuso | tornillo |
| 39 | **27E000008** | 4 | Flatwasher | rondelle plate | Unterlegscheibe | arruela chata | arandela plana |
| 40 | [1]†**1992210** | 1 | Repair kit | trousse de reparation | Reparatursatz | conjunto de reparo | juego de reparación |
| 41 | [1]†**1992113** | 1 | Relief valve | soupape decharge | Uberdr Ventil | valvula descarga | valvula alivio |
| 42 | [1]†**861692** | 1 | Boot | capuchon | Kappe | capuz | capuchón |
| 43 | **857944** | 1 | Filler plug | bouchon de remplis | Füller Stopfen | bujão de abastesc | tapón de llenadao |

[1] Items 40, 41 & 42 to service master cylinder
[1] Articles 40, 41 & 42 pour l'entretient du maître cylindre
[1] Artikel 40, 41 & 42 zur Bedienung des Haptzylinders
[1] Os itens 40, 41 e 42 são para o serviço do cilindro mestre
[1] Los items 40, 41 y 42 son para el servicio del cilindro maestro

[2] Ref A7 10200

| | |
|---|---|
| 666CUM | 500G-2126-CAC→500G-9999-CAC |
| 666GM | 513G-2441-CAC→513G-9999-CAC |
| 666GMGR | 515A-316-CAC→515A-9999-CAC |

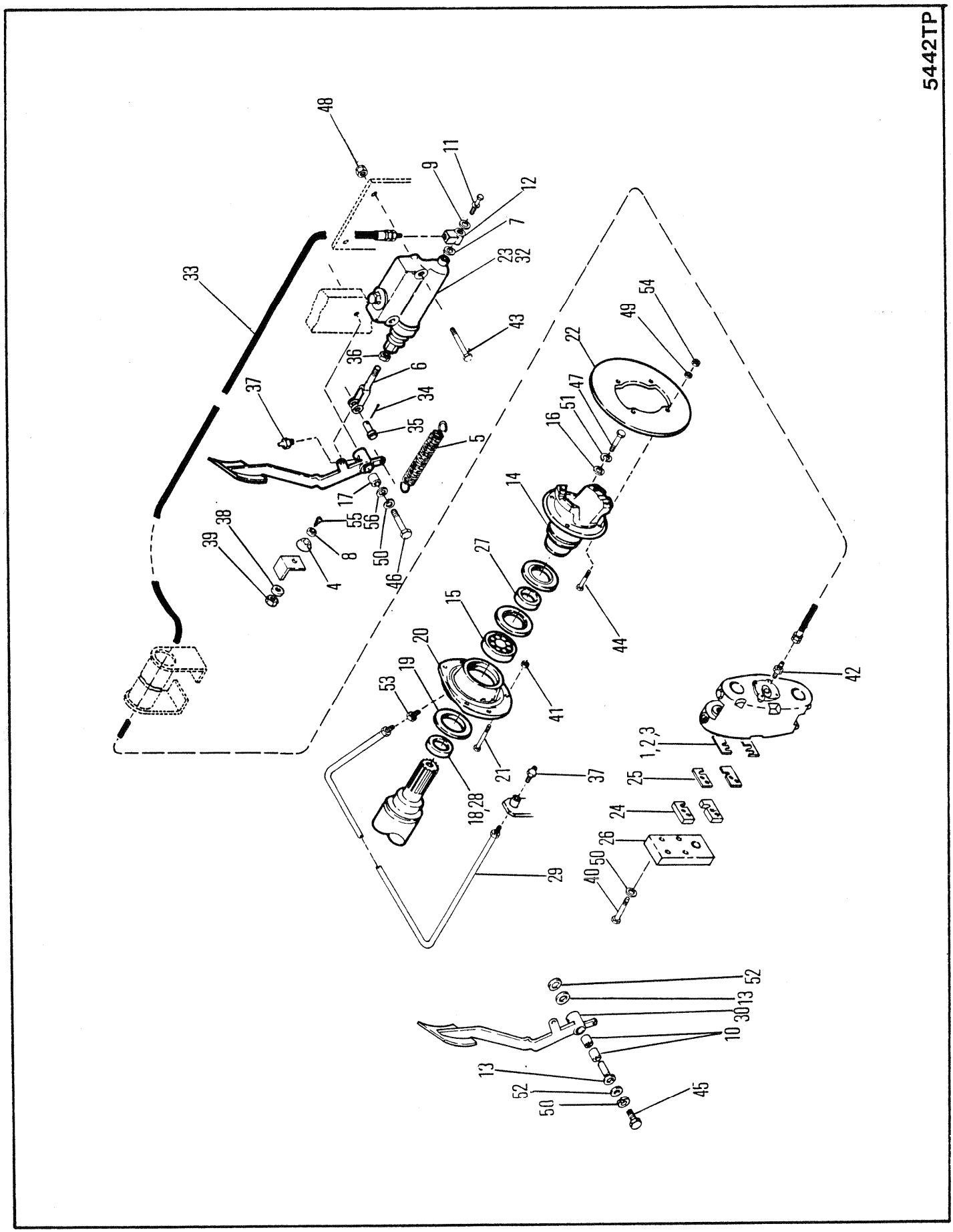
5442TP
48
11
9
12
7
23
32
33
43
36
6
34
37
35
5
17
55
56
38
39
8
4
50
46
54
49
22
47
51
16
14
27
15
20
19
53
41
44
42
1,2,3
25
24
26
50
40
37
21
18,28
29
52
13
30
10
13
52
50
45

## SERVICE BRAKE CONTROLS - DISC ⊠
## DISC DE CONTRÔLES DU FREIN DE SERVICE ⊠
## KONTROLLSCHEIBE DER STANDBREMSE ⊠
## DISCO DE CONTROLE DE FREIO DE SERVIÇIO ⊠
## DISCO DE CONTROL DEL FRENO DE SERVICIO ⊠

| No. | Part No. | Qty | Description | Description | Benennung | Descrição | Descripción |
|---|---|---|---|---|---|---|---|
| 1 | †124482 | - | Shim .010 | cale-0,25MM | Beilage-0,25MM | calço-0,25MM | planchita-0,25MM |
| 2 | †124483 | - | Shim .020 | cale-0,51MM | Beilage-0,51MM | calço-0,51MM | planchita-0,51MM |
| 3 | †124484 | - | Shim .030 | cale 0,762MM | Beilage 0,762MM | calço 0,762MM | planchita 0,762MM |
| 4 | 302568 | 1 | Bumper | butoir | Stossfnger | batente | tope |
| 5 | 550301 | 1 | Spring | ressort | Feder | mola | resorte |
| 6 | 552377 | 1 | Clevis | étrier | Schkel | garfo | horquilla |
| 7 | 613750 | 1 | Fitting | ajustage | Verbindung | ajuste | accesorio |
| 8 | 616775 | 1 | Washer | rondelle | Scheibe | arruela | arandela |
| 9 | 620238 | 1 | Fitting | ajustage | Verbindung | ajuste | accesorio |
| 10 | 675227 | 2 | Bearing | palier | Lager | mancal | cojinete |
| 11 | 692722 | 1 | Bolt | boulon | Bolzen | parafuso | bulón |
| 12 | 854915 | 1 | Fitting | ajustage | Verbindung | ajuste | accesorio |
| 13 | 1522535 | 2 | Wiper ring | anneau de came | Wischerring | anello limpador | anillo restregador |
| 14 | 1900065 | 1 | Flange | bride | Flansch | flange | brida |
| 15 | 1900177 | 1 | Bearing | palier | Lager | mancal | cojinete |
| 16 | 1900338 | 1 | Washer | rondelle | Scheibe | arruela | arandela |
| 17 | 1900710 | 1 | Sleeve | manchon | Muffe | luva | manguito |
| 18 | 1901340 | 1 | Collar | collier | Bund | colar | collar |
| 19 | 1901398 | 3 | Seal | joint étanchéité | Dichtung | vedador | sello |
| 20 | 1901399 | 1 | Pillow block | bloc coussin | Lagerbock | bloco de apoio | caja de chumacera |
| 21 | 1901461 | 6 | Bolt | boulon | Bolzen | parafuso | bulón |
| 22 | 1901575 | 1 | Brake disc | disque frein | Bremsscheibe | disco freio | disco freno |
| 23 | 1902106 | 1 | Master cylinder | mate cylindre | Hauptzylinder | cilindro mestre | cilindro maestro |
| 24 | 1909875 | 1 | Spacer | entretoise | Distanzteil | espaçador | espaciador |
| 25 | ‡1909876 | 2 | Shim | cale | Beilage | calço | planchita |
| 26 | 1909878 | 1 | Block | bloc | Block | bloco | bloque |
| 27 | 1913522 | 1 | Spacer | entretoise | Distanzteil | espaçador | espaciador |
| 28 | 1913562 | 1 | Collar | collier | Bund | colar | collar |
| 29 | 1914817 | 1 | Tube | tube | Rohr | tubo | tubo |
| 30 | [1]1916442 | 1 | Brake pedal | pédale de frein | Bremspedal | pedal do freio | pedal del freno |
| 31 | 1916718 | 1 | Sleeve | manchon | Muffe | luva | manguito |
| 32 | 1916765 | 1 | Repair kit | trousse de reparation | Reparatursatz | conjunto de reparo | juego de reparación |
| 33 | 1916841 | 1 | Hose | tuyau flexible | Schlauch | mangueira | manguera |
| 34 | 1F0000412 | 1 | Pin | goupille | Stift | pino | pasador |
| 35 | 4F0008127 | 1 | Pin | goupille | Stift | pino | pasador |
| 36 | 8D0000007 | 1 | Nut | écrou | Mutter | porca | tuerca |
| 37 | 10H000025 | 2 | Fitting | ajustage | Verbindung | ajuste | accesorio |
| 38 | 13E000010 | 1 | Lockwasher | rondelle frein | Sicherungsscheibe | arruela de pressão | arandela seguridad |
| 39 | 14D000010 | 1 | Nut | écrou | Mutter | porca | tuerca |
| 40 | 17C001056 | 4 | Bolt | boulon | Bolzen | parafuso | bulón |
| 41 | 17D000004 | 6 | Nut | écrou | Mutter | porca | tuerca |
| 42 | 17K000004 | 1 | Fitting | ajustage | Verbindung | ajuste | accesorio |
| 43 | 18C000656 | 2 | Bolt | boulon | Bolzen | parafuso | bulón |
| 44 | 18C000824 | 4 | Bolt | boulon | Bolzen | parafuso | bulón |
| 45 | 18C001064 | 1 | Bolt | boulon | Bolzen | parafuso | bulón |
| 46 | 18C001072 | 1 | Bolt | boulon | Bolzen | parafuso | bulón |
| 47 | 18C001436 | 1 | Bolt | boulon | Bolzen | parafuso | bulón |
| 48 | 18D000006 | 2 | Nut | écrou | Mutter | porca | tuerca |
| 49 | 24E000008 | 4 | Washer | rondelle | Scheibe | arruela | arandela |
| 50 | 24E000010 | 5 | Lockwasher | rondelle frein | Sicherungsscheibe | arruela de pressão | arandela seguridad |
| 51 | 24E000014 | 1 | Lockwasher | rondelle frein | Sicherungsscheibe | arruela de pressão | arandela seguridad |
| 52 | 25E000026 | 3 | Washer | rondelle | Scheibe | arruela | arandela |
| 53 | ‡59F000003 | - | Fitting | ajustage | Verbindung | ajuste | accesorio |
| 54 | 64D000008 | 4 | Nut | écrou | Mutter | porca | tuerca |
| 55 | 86G001010 | 1 | Screw | vis | Schraube | parafuso | tornillo |
| 56 | 619032 | 1 | Washer | rondelle | Scheibe | arruela | arandela |

[1] □513E-1226-CAC&➡, 500E-966-CAC&➡, 515A-101-CAC&➡

666CUM 500E-101-CAC➡500G-2125-CAC
666GM 513E-101-CAC➡513G-2440-CAC
666GMGR 515A-101-CAC➡515A-315-CAC

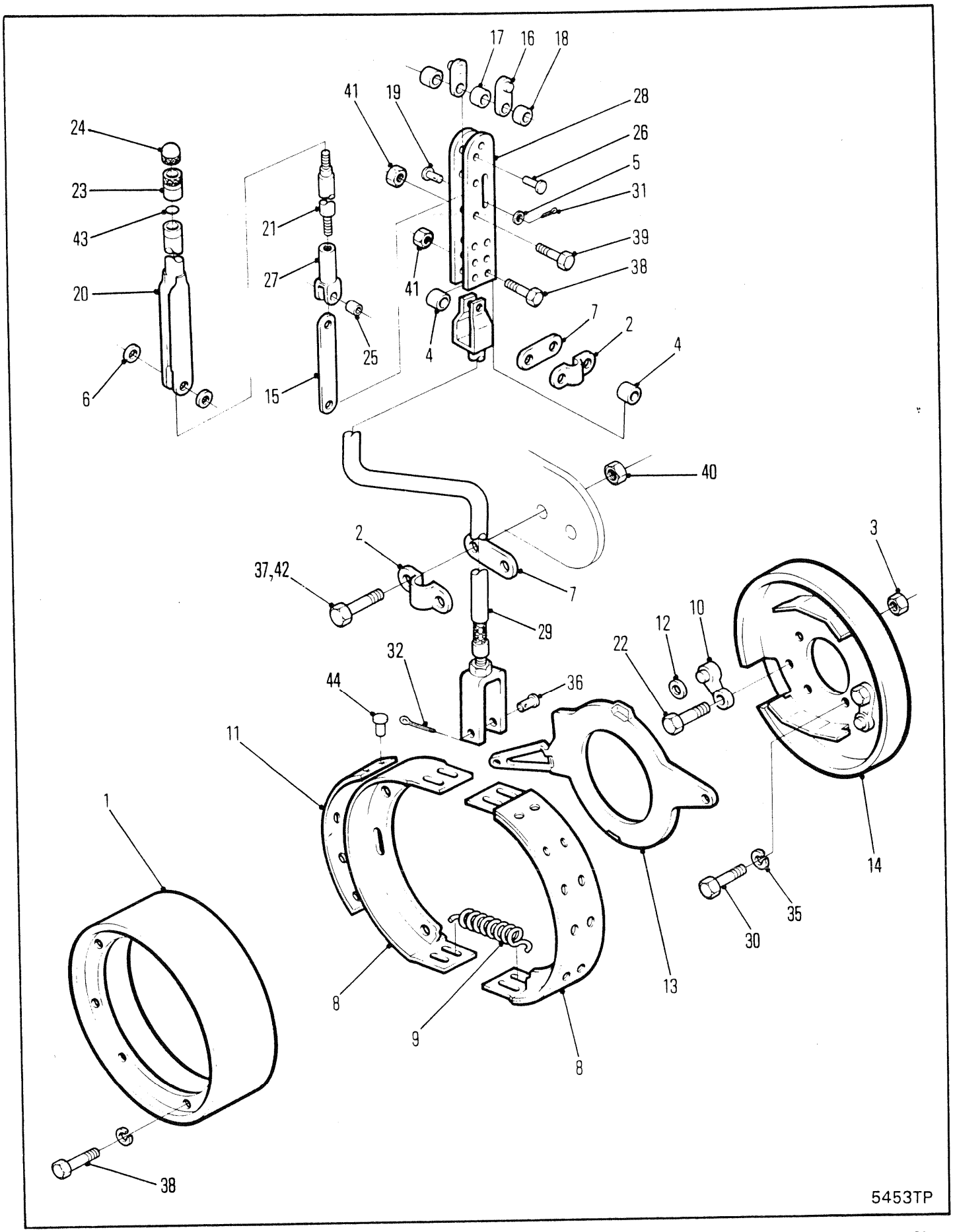
17
16
18
41
19
28
26
5
31
39
38
24
23
43
20
6
21
27
25
15
41
4
7
2
4
40
2
37,42
7
29
32
44
36
22
12
10
3
11
1
14
35
30
13
8
9
8
38
5453TP

# PARKING BRAKE
# FREIN DE STATIONNEMENT
# STANDBREMSE
# FREIO DE ESTACIONAMENTO
# FRENO DE ESTACIONAMIENTO

| No. | Part No. | Qty | Description | Description | Benennung | Descrição | Descripción |
|---|---|---|---|---|---|---|---|
| A | [1]544998 | 1 | Lever assy | levier ens | Hebel vollst | alavanca conj | palanca conj |
| 1 | 215160 | 1 | Drum | tambour | Trommel | tambor | tambor |
| 2 | 544512 | 2 | Clamp | pince | Schelle | braçadeira | abrazadera |
| 3 | 43D000006 | 2 | Nut | écrou | Mutter | porca | tuerca |
| 4 | 545005 | 2 | Spacer | entretoise | Distanzteil | espaçador | espaciador |
| 5 | 619019 | 1 | Washer | rondelle | Scheibe | arruela | arandela |
| 6 | 635373 | 2 | Spacer | entretoise | Distanzteil | espaçador | espaciador |
| 7 | 645092 | 2 | Link | articulation | Gelenk | articulação | articulación |
| 8 | [5]801192 | 2 | Lining kit | garniture trousse | Belagsatz | lona jogo | cinta juego |
| 9 | 801193 | 1 | Spring | ressort | Feder | mola | resorte |
| 10 | [3]801213 | 2 | Pawl kit | jeu cliquet | Sperrklinke Satz | jogo garra | juego trinquete |
| 11 | 801214 | 2 | Lining | garniture | Belag | lona | cinta |
| 12 | 801215 | 1 | Roller | galet | Rolle | rolete | rodillo |
| 13 | 801216 | 1 | Lever | levier | Hebel | alavanca | palanca |
| 14 | [4]801217 | 1 | Plate assy | ens plaques | Platte vollst | conj placa | conj placa |
| 15 | 862652 | 1 | Link | articulation | Gelenk | articulação | articulación |
| 16 | 862653 | 2 | Bracket | support | Winkel | grampo | grampa |
| 17 | 862655 | 1 | Spacer | entretoise | Distanzteil | espaçador | espaciador |
| 18 | 862656 | 2 | Spacer | entretoise | Distanzteil | espaçador | espaciador |
| 19 | 862738 | 1 | Pin | goupille | Stift | pino | pasador |
| 20 | 866348 | 1 | Body | carrosserie | Karosserie | carroçria | carrocería |
| 21 | 866349 | 1 | Screw | vis | Schraube | parafuso | tornillo |
| 22 | 886718 | 2 | Bolt | boulon | Bolzen | parafuso | bulón |
| 23 | 941226 | 1 | Base | base | Untergestell | base | base |
| 24 | 941227 | 1 | Cap | chapeau | Kappe | tampa | tapa |
| 25 | 941238 | 1 | Pin | goupille | Stift | pino | pasador |
| 26 | 944054 | 1 | Rivet | rivet | Niet | rebite | remache |
| 27 | 944968 | 1 | Clevis | étrier | Schkel | garfo | horquilla |
| 28 | 944969 | 2 | Bracket | support | Winkel | grampo | grampa |
| 29 | [2]1914240 | 1 | Cable | câble | Kabel | cabo | cable |
| 30 | 1C000916 | 4 | Bolt | boulon | Bolzen | parafuso | bulón |
| 31 | 1F000312 | 1 | Cotter pin | goupille fendue | Splint | contrapino | chaveta dos patos |
| 32 | 1F000316 | 1 | Cotter pin | goupille fendue | Splint | contrapino | chaveta dos patos |
| 33 | 2C000612 | 6 | Bolt | boulon | Bolzen | parafuso | bulón |
| 34 | 4E000006 | 6 | Lockwasher | rondelle frein | Sicherungsscheibe | arruela de pressão | arandela seguridad |
| 35 | 4E000009 | 4 | Lockwasher | rondelle frein | Sicherungsscheibe | arruela de pressão | arandela seguridad |
| 36 | 4F006106 | 1 | Pin | goupille | Stift | pino | pasador |
| 37 | 17C000520 | 2 | Bolt | boulon | Bolzen | parafuso | bulón |
| 38 | 17C000528 | 2 | Bolt | boulon | Bolzen | parafuso | bulón |
| 39 | 17C000636 | 2 | Bolt | boulon | Bolzen | parafuso | bulón |
| 40 | 17D000002 | 2 | Nut | écrou | Mutter | porca | tuerca |
| 41 | 17D000003 | 3 | Nut | écrou | Mutter | porca | tuerca |
| 42 | ‡†25E000017 | 4 | Washer | rondelle | Scheibe | arruela | arandela |
| 43 | 25K030112 | 1 | O-ring | joint torique | O Ring | anel-O | anillo-O |
| 44 | 30H000504 | 20 | Rivet | rivet | Niet | rebite | remache |

[1] Inc 5,6,15➞18,20,21,23➞28,31,43

[2] 513E-101➞485-CAC, 514E-101➞645-CAC,500E-101➞460-CAC Ref. R.S.G.122 for cable replacement
[2] 513E-101➞485-CAC, 514-101➞645-CAC, 500E-101➞460-CAC.Se référer au R.S.G. 122 pour le remplacement du câble
[2] 513E-101➞485-CAC, 514E-101➞645-CAC, 500E-101➞460-CAC verwendet. Ref. R.S.G. 122 wegen Seilaustausch
[2] 513E-101➞485-CAC, 514E-101➞645-CAC, 500E-101➞460-CAC. Ref. a R.S.G. 122 para substituição do cabo
[2] 513E-101➞485-CAC, 514E-101➞645-CAC, 500E-101➞460-CAC. Ref. R.S.G. 122 para reemplazo del cable

[3] Inc 3,12, & 22

[4] Inc 3,12 & 14 & 22

[5] Inc 11 & 44

666CUM 500E-101-CAC➞500G-9999-CAC
666GM 513E-101-CAC➞513G-9999-CAC
666GMGR 515A-101-CAC➞515A-9999-CAC

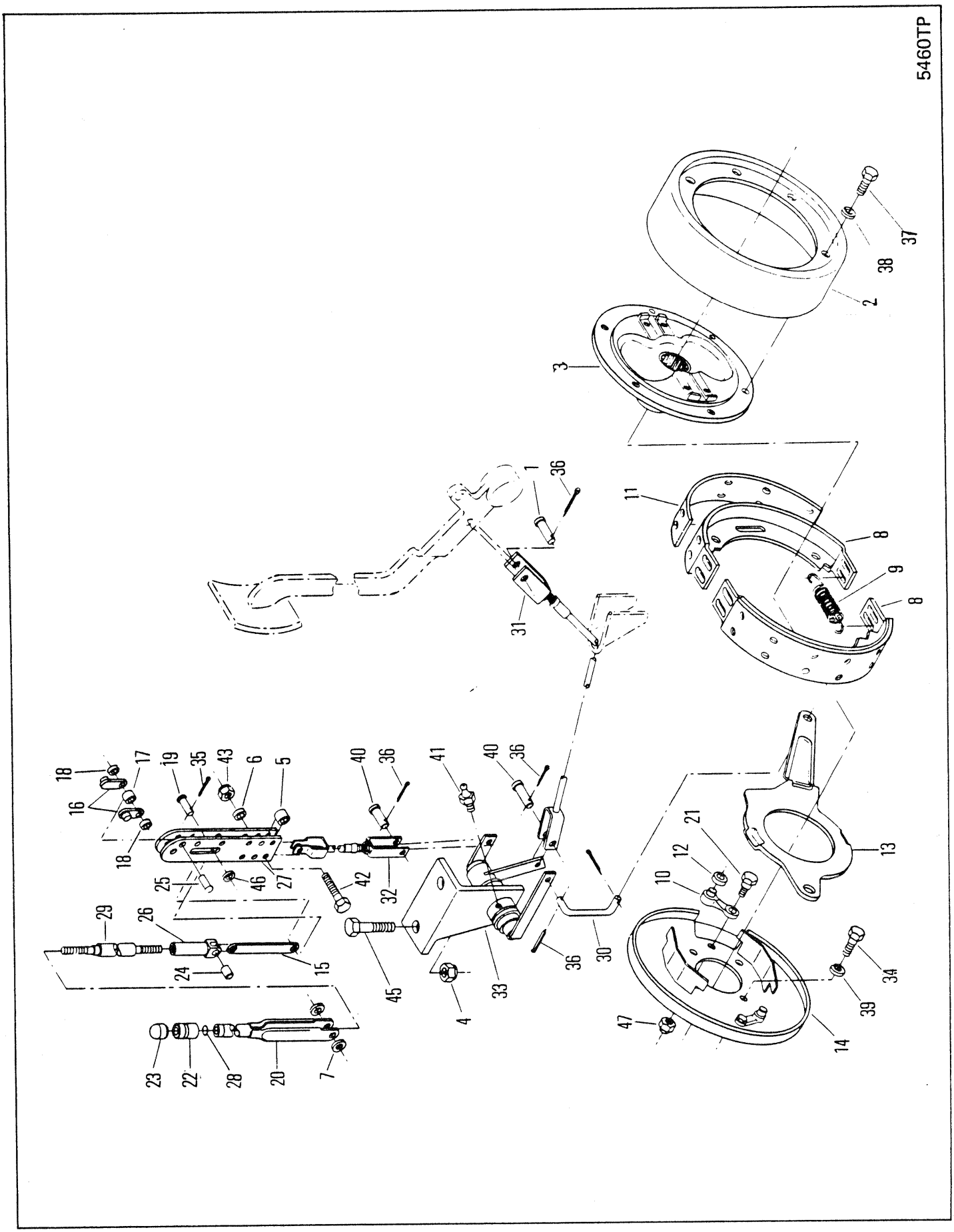
5460TP
1
2
3
4
5
6
7
8
9
10
11
12
13
14
15
16
17
18
19
20
21
22
23
24
25
26
27
28
29
30
31
32
33
34
35
36
37
38
39
40
41
42
43
45
46
47

## SECONDARY BRAKE CONTROLS ⊠
## COMMANDE DE FREIN SECONDAIRE ⊠
## SEKUNDÄRBREMSBEDIENUNG ⊠
## CONTROLES DO FREIO SECUNDÁRIO ⊠
## CONTROLES DEL FRENO SECUNDARIO ⊠

| No. | Part No. | Qty | Description | Description | Benennung | Descrição | Descripción |
|---|---|---|---|---|---|---|---|
| A | [1]215159 | 1 | Brake assy | frein ens | Bremse vollst | freio conj | freno conj |
| B | [2]544998 | 1 | Lever assy | levier ens | Hebel vollst | alavanca conj | palanca conj |
| 1 | 2F006106 | 1 | Pin | goupille | Stift | pino | pasador |
| 2 | 215160 | 1 | Drum | tambour | Trommel | tambor | tambor |
| 3 | 215550 | 1 | Flange | bride | Flansch | flange | brida |
| 4 | 68D000012 | 2 | Nut | écrou | Mutter | porca | tuerca |
| 5 | 545005 | 2 | Spacer | entretoise | Distanzteil | espaçador | espaciador |
| 6 | 552914 | 2 | Spacer | entretoise | Distanzteil | espaçador | espaciador |
| 7 | 619024 | 2 | Washer | rondelle | Scheibe | arruela | arandela |
| 8 | [3]801192 | 2 | Shoe assy | ass du sabot | Schuheinheit | conj da sapata | conj zapata |
| 9 | 801193 | 2 | Spring | ressort | Feder | mola | resorte |
| 10 | [5]801213 | 2 | Pawl kit | jeu cliquet | Sperrklinke Satz | jogo garra | juego trinquete |
| 11 | 801214 | 1 | Lining | garniture | Belag | lona | cinta |
| 12 | 801215 | 1 | Roller | galet | Rolle | rolete | rodillo |
| 13 | 801216 | 1 | Lever | levier | Hebel | alavanca | palanca |
| 14 | [4]801217 | 1 | Plate assy | ens plaques | Platte vollst | conj placa | conj placa |
| 15 | 862652 | 1 | Link | articulation | Gelenk | articulação | articulación |
| 16 | 862653 | 2 | Bracket | support | Winkel | grampo | grampa |
| 17 | 862655 | 1 | Spacer | entretoise | Distanzteil | espaçador | espaciador |
| 18 | 862656 | 2 | Spacer | entretoise | Distanzteil | espaçador | espaciador |
| 19 | 862738 | 1 | Pin | goupille | Stift | pino | pasador |
| 20 | 866348 | 1 | Body | carrosserie | Karosserie | carroçria | carrocería |
| 21 | 886718 | 2 | Bolt | boulon | Bolzen | parafuso | bulón |
| 22 | 941226 | 1 | Base | base | Untergestell | base | base |
| 23 | 941227 | 1 | Cap | chapeau | Kappe | tampa | tapa |
| 24 | 941238 | 1 | Pin | goupille | Stift | pino | pasador |
| 25 | 944054 | 1 | Rivet | rivet | Niet | rebite | remache |
| 26 | 944968 | 1 | Tube | tube | Rohr | tubo | tubo |
| 27 | 944969 | 2 | Bracket | support | Winkel | grampo | grampa |
| 28 | 946163 | 1 | Washer | rondelle | Scheibe | arruela | arandela |
| 29 | 966349 | 1 | Screw | vis | Schraube | parafuso | tornillo |
| 30 | 1902581 | 1 | Rod | tige | Stange | varão | varilla |
| 31 | 1902585 | 1 | Cable | câble | Kabel | cabo | cable |
| 32 | 1902586 | 1 | Cable assy | ens câble | Kabel vollst | conjunto do cabo | conjunto de cable |
| 33 | 1902607 | 1 | Pivot | pivot | Zapfen | perno | muón |
| 34 | 1C000916 | 4 | Bolt | boulon | Bolzen | parafuso | bulón |
| 35 | 1F000312 | 1 | Pin | goupille | Stift | pino | pasador |
| 36 | 1F000316 | 5 | Pin | goupille | Stift | pino | pasador |
| 37 | 2C000612 | 6 | Bolt | boulon | Bolzen | parafuso | bulón |
| 38 | 4E000006 | 6 | Lockwasher | rondelle frein | Sicherungsscheibe | arruela de pressão | arandela seguridad |
| 39 | 4E000009 | 4 | Lockwasher | rondelle frein | Sicherungsscheibe | arruela de pressão | arandela seguridad |
| 40 | 4F006106 | 3 | Pin | goupille | Stift | pino | pasador |
| 41 | 10H000025 | 1 | Fitting | ajustage | Verbindung | ajuste | accesorio |
| 42 | 17C000536 | 2 | Bolt | boulon | Bolzen | parafuso | bulón |
| 43 | 17D000002 | 2 | Nut | écrou | Mutter | porca | tuerca |
| 44 | 43D000006 | 2 | Nut | écrou | Mutter | porca | tuerca |
| 45 | 18C001248 | 2 | Bolt | boulon | Bolzen | parafuso | bulón |
| 46 | 25E000015 | 1 | Washer | rondelle | Scheibe | arruela | arandela |

[1] Inc 4, 8→14, 21, 30, 33, 34, 36, 39, 44

[2] Inc 7, 15, 20, 22→24, 26→29, 46

[3] Inc 11

[4] Inc 10, 12, 21, 44

[5] Inc 12, 21 & 44

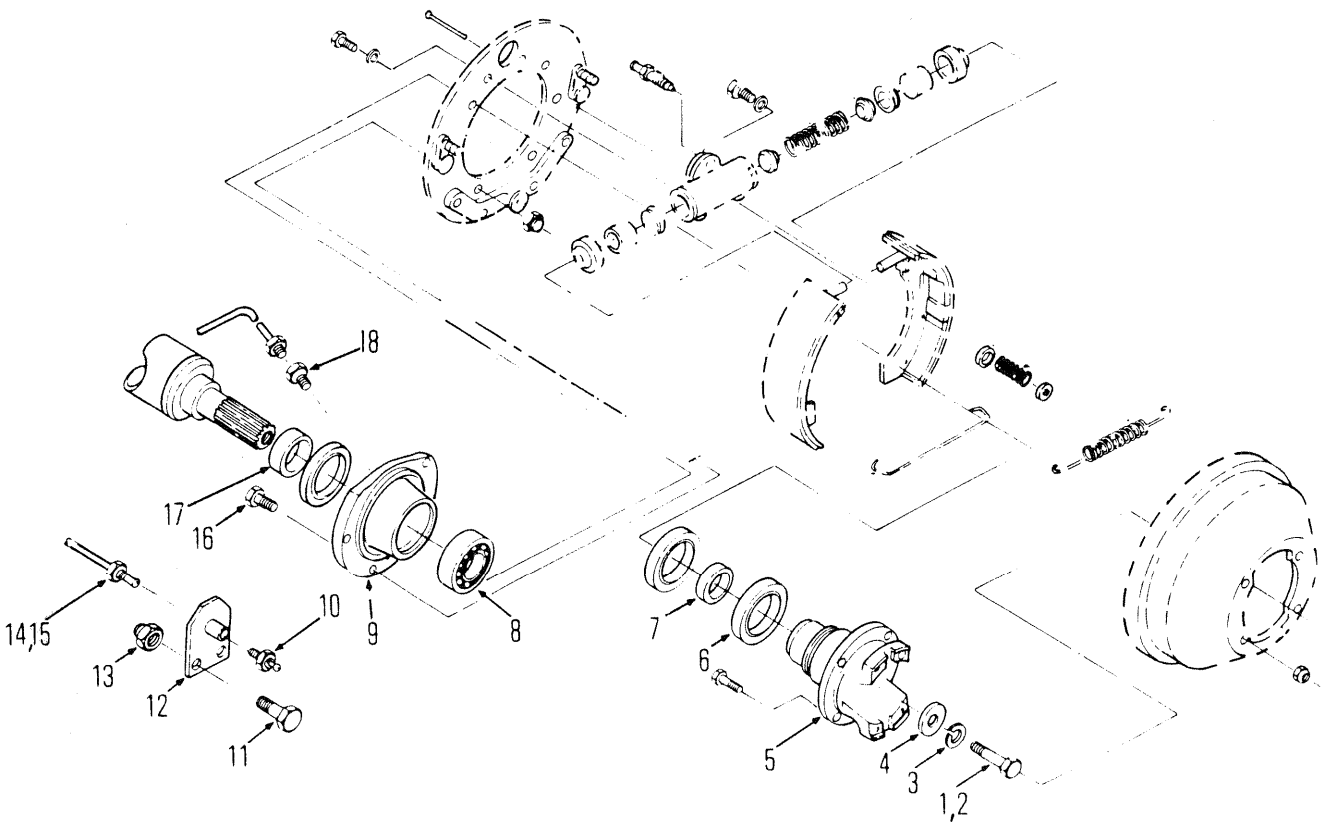


5469TP

# BRAKE-PILLOW BLOCK & MOUNTING
# FREIN-BLOC AMORTISSEUR ET FIXATION
# BREMSE-LAGERBOCK UND MONTAGETEILE
# FREIO-COXIM DE MANCAL E SUPORTE
# FRENOS-SOPORTE Y MONTURA

| No. | Part No. | Qty | Description | Description | Benennung | Descrição | Descripción |
|---|---|---|---|---|---|---|---|
| 1 | **18C001436** | 1 | Bolt | boulon | Bolzen | parafuso | bulón |
| 2 | **17D000004** | 6 | Nut | écrou | Mutter | porca | tuerca |
| 3 | **24E000014** | 1 | Lockwasher | rondelle frein | Sicherungsscheibe | arruela de pressão | arandela seguridad |
| 4 | **1900338** | 1 | Flatwasher | rondelle plate | Unterlegscheibe | arruela chata | arandela plana |
| 5 | **1900065** | 1 | Flange | bride | Flansch | flange | brida |
| 6 | **1901398** | 3 | Seal | joint étanchéité | Dichtung | vedador | sello |
| 7 | **1913522** | 1 | Spacer | entretoise | Distanzteil | espaçador | espaciador |
| 8 | **1900177** | 1 | Bearing | palier | Lager | mancal | cojinete |
| 9 | **1901399** | 1 | Pillow block | bloc coussin | Lagerbock | bloco de apoio | caja de chumacera |
| 10 | **10H000025** | 11 | Fitting | ajustage | Verbindung | ajuste | accesorio |
| 11 | **18C000620** | 2 | Bolt | boulon | Bolzen | parafuso | bulón |
| 12 | **1900572** | 1 | Bracket | support | Winkel | grampo | grampa |
| 13 | **18D000006** | 2 | Nut | écrou | Mutter | porca | tuerca |
| 14 | **1900538** | 1 | Line | ligne | Leitung | linha | línea |
| 15 | **1914817** | 1 | Line | ligne | Leitung | linha | línea |
| 16 | **1901461** | 6 | Bolt | boulon | Bolzen | parafuso | bulón |
| 17 | **1913562** | 1 | Collar | collier | Bund | colar | collar |
| 18 | **‡59F000003** | - | Connector | raccord | Verbindungsstück | ligador | conector |

666CUM 500D-101-CAC➡500G-2125-CAC
666GM 513E-101-CAC➡513G-2440-CAC
666GMGR 515A-101-CAC➡515A-315-CAC

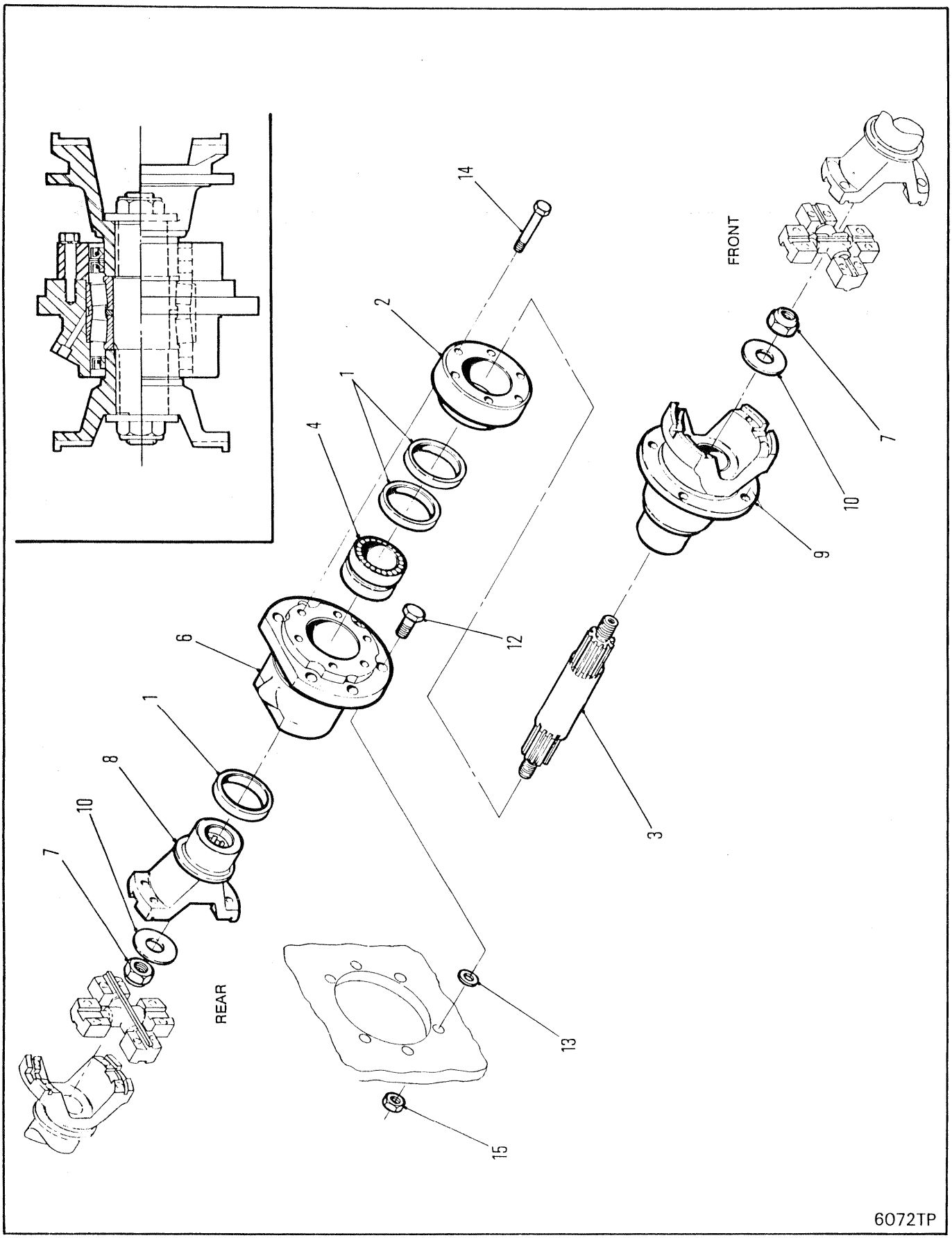
REAR
FRONT
1
2
3
4
6
7
8
9
10
12
13
14
15
6072TP

# MID-MOUNT BEARING ASSEMBLY
# PALIER INTERMÉDIAIRE, ENSEMBLE
# MITTELLAGER VOLLSTÄNDIG
# MANCAL CENTRAL, CONJUNTO
# COJINETE CENTRAL, CONJUNTO

| No. | Part No. | Qty | Description | Description | Benennung | Descrição | Descripción |
|---|---|---|---|---|---|---|---|
| 1 | **1901398** | 3 | Seal | joint étanchéité | Dichtung | vedador | sello |
| 2 | **1916992** | 1 | Cap | chapeau | Kappe | tampa | tapa |
| 3 | **1916993** | 1 | Shaft | arbre | Welle | ávore | árbol |
| 4 | **1916994** | 1 | Bearing | palier | Lager | mancal | cojinete |
| 5 | [1]**1917296** | 1 | Mid-mount assy | ens montage central | Mittelstütze vollst | cj montante do meio | cj montaje intermedio |
| 6 | **1917298** | 1 | Pillow block | bloc coussin | Lagerbock | bloco de apoio | caja de chumacera |
| 7 | **1917299** | 2 | Nut | écrou | Mutter | porca | tuerca |
| 8 | [2]**1919402** | 1 | Flange | bride | Flansch | flange | brida |
| 9 | **1919403** | 1 | Flange | bride | Flansch | flange | brida |
| 10 | **1920302** | 2 | Washer | rondelle | Scheibe | arruela | arandela |
| 11 | [2]**1925425** | 1 | Flange | bride | Flansch | flange | brida |
| 12 | **17C000632** | 6 | Bolt | boulon | Bolzen | parafuso | bulón |
| 13 | **27E000006** | 6 | Washer | rondelle | Scheibe | arruela | arandela |
| 14 | **33C000632** | 6 | Bolt | boulon | Bolzen | parafuso | bulón |
| 15 | **59D000006** | 6 | Nut | écrou | Mutter | porca | tuerca |

[1] Inc 1➡4, 6➡10 & 14

[2] 1919402 flange is replaced by 1925425 with the 1925428 propshaft on 664, 666, and 1925429 propshaft on 667 machines
[2] La bride 1919402 est remplacée par 1925425 avec l'arbre d'hélice 1925428 sur les engines 664, 666 et l'arbre d'hélice 1925429 sur l'engine 667.
[2] Der Flansch 1919402 wird ersetzt durch 1925425 mit Propellerwelle 1925428 für die Modelle 664, 666 und mit Properwelle 1925429 für das Modell 667.
[2] A flange 1919402 é substituida pela 1925425 com o eixo de propulsão 1925428 no 664,666, e o eixo de propulsão no 677 do motor.
[2] La brida 1919402 ha sido reemplazada por 1925425 con el eje propulsor 1925428 en la 664, 666 y el eje propulsor 1925429 en las máquinas 667.

| | |
|---|---|
| 666CUM | 500G-2136-CAC➡500G-2335-CAC |
| 666GM | 513G-2441-CAC➡513G-2810-CAC |
| 666GMGR | 515A-316-CAC➡515A-630-CAC |

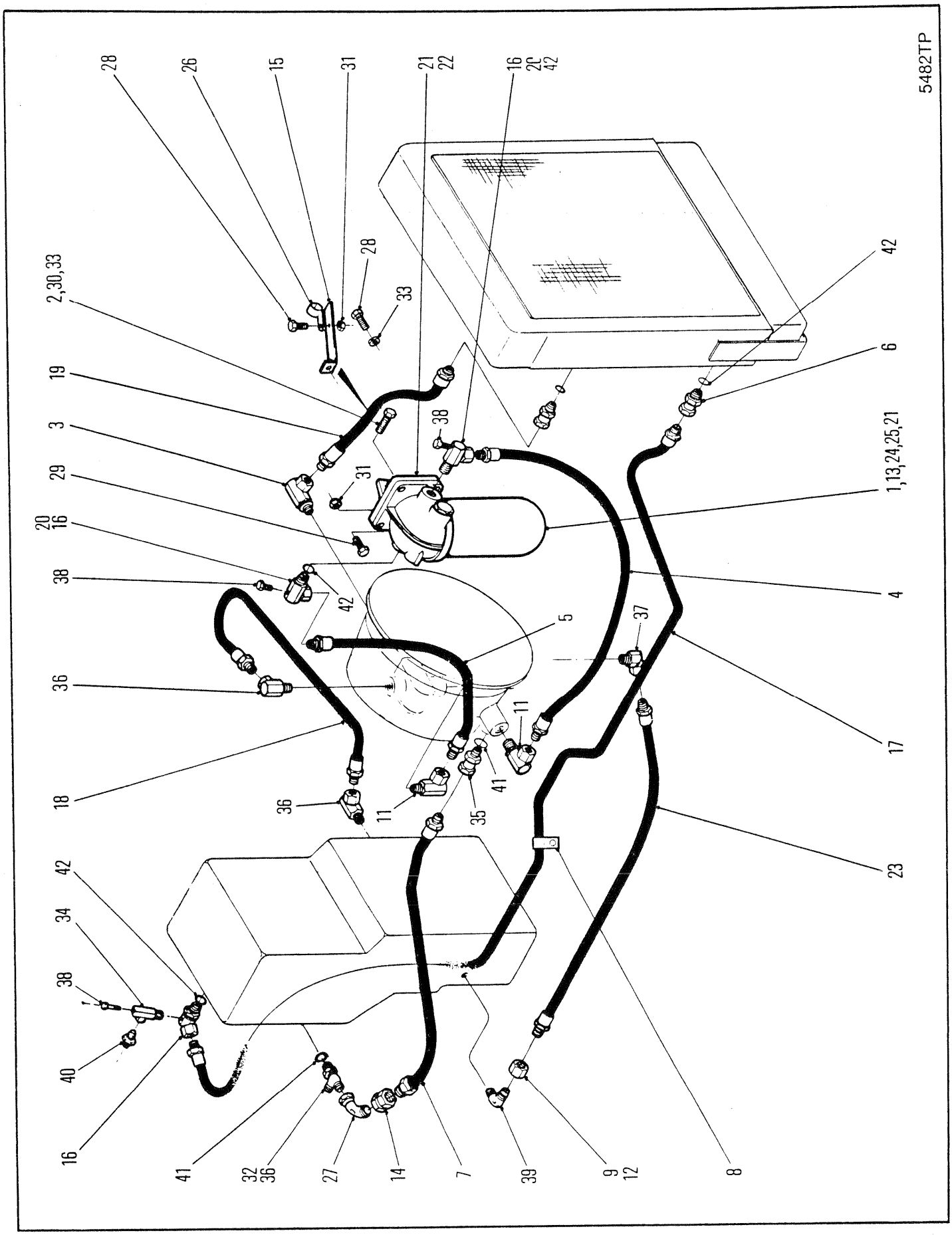
5482TP
28
26
15
31
21
22
16
20
42
2,30,33
19
3
29
20
16
38
36
18
42
34
38
40
16
41
32
36
27
14
7
39
9
12
8
23
17
4
1,13,24,25,21
6
42
33
38
31
42
5
37
11
41
35
11
36

# HYDRAULIC SYSTEM, TRANSMISSION & TORQUE CONVERTER
# SYSTÈME HYDRAULIQUE, TRANSMISSION & CONVERTISSEUR
# HYDRAULIKANLAGE GETRIEBE & DREHMOMENTWANDLER
# SISTEMA HIDRÁULICO, TRANSMISSÃO & CONVERSOR DE TORQUE
# SISTEMA HIDRÁULICO, TRANSMISIÓN & CONVERTIDOR DE PAR

| No. | Part No. | Qty | Description | Description | Benennung | Descrição | Descripción |
|---|---|---|---|---|---|---|---|
| 1 | [3]†215502 | 1 | Element | elément | Element | elemento | elemento |
| 2 | †215909 | 2 | Flatwasher | rondelle plate | Unterlegscheibe | arruela chata | arandela plana |
| 3 | 526676 | 1 | Adapter | adaptateur | Zwischenstück | adaptador | adaptador |
| 4 | 536792 | 1 | Hose | tuyau flexible | Schlauch | mangueira | manguera |
| 5 | 538090 | 1 | Hose | tuyau flexible | Schlauch | mangueira | manguera |
| 6 | 545204 | 2 | Adapter union | adaptateur raccord | Zw-Stück-Anschluss | adaptador união | adaptador acople |
| 7 | 546842 | 1 | Hose | tuyau flexible | Schlauch | mangueira | manguera |
| 8 | 551888 | 1 | Clip | attache | Schelle | braçadeira | abrazadera |
| 9 | [2]574290 | 1 | Adapter | adaptateur | Zwischenstück | adaptador | adaptador |
| 10 | 583573 | 1 | Adapter | adaptateur | Zwischenstück | adaptador | adaptador |
| 11 | 690279 | 1 | Adapter | adaptateur | Zwischenstück | adaptador | adaptador |
| 12 | [1]716464 | 1 | Adapter | adaptateur | Zwischenstück | adaptador | adaptador |
| 13 | [5,7]1533614 | 1 | Filter | filtre | filter | filtro | filtro |
| 14 | [1]1542360 | 1 | Union | raccord | Anschlusstück | união | unión |
| 15 | 1900603 | 1 | Bracket | support | Winkel | grampo | grampa |
| 16 | [4,6]1901460 | 3 | Elbow | coude | Winkelrohr | cotovêlo | codo |
| 17 | 1901494 | 1 | Hose | tuyau flexible | Schlauch | mangueira | manguera |
| 18 | 1901495 | 1 | Hose | tuyau flexible | Schlauch | mangueira | manguera |
| 19 | 1902871 | 1 | Hose | tuyau flexible | Schlauch | mangueira | manguera |
| 20 | 1908704 | 2 | Adapter | adaptateur | Zwischenstück | adaptador | adaptador |
| 21 | 1992218 | 1 | Bolt | boulon | Bolzen | parafuso | bulón |
| 22 | 1908708 | 1 | Bracket | support | Winkel | grampo | grampa |
| 23 | 1916963 | 1 | Hose | tuyau flexible | Schlauch | mangueira | manguera |
| 24 | [3]6191839 | 1 | Head | culasse | Kopf | cabeça | cabeza |
| 25 | [3]6191841 | 1 | Shell | botier | Gehuse | carcaça | carcasa |
| 26 | 6H0000034 | 1 | Clip | attache | Schelle | braçadeira | abrazadera |
| 27 | [1]12K000006 | 1 | Adapter | adaptateur | Zwischenstück | adaptador | adaptador |
| 28 | 17C000614 | 2 | Bolt | boulon | Bolzen | parafuso | bulón |
| 29 | 17C000628 | 4 | Bolt | boulon | Bolzen | parafuso | bulón |
| 30 | 17C000720 | 2 | Bolt | boulon | Bolzen | parafuso | bulón |
| 31 | 17D000003 | 5 | Nut | écrou | Mutter | porca | tuerca |
| 32 | [1]21K000006 | 1 | Tee assy | ass raccord en T | T-Stückenheit | conjunto de Te | dispositivo T |
| 33 | 24E000006 | 3 | Lockwasher | rondelle frein | Sicherungsscheibe | arruela de pressão | arandela seguridad |
| 34 | 30F000001 | 1 | Tee | raccord T | T-Verbindungsstück | te | te |
| 35 | 31F000005 | 1 | Adapter | adaptateur | Zwischenstück | adaptador | adaptador |
| 36 | [2]31F000006 | 3 | Adapter | adaptateur | Zwischenstück | adaptador | adaptador |
| 37 | 33F000006 | 1 | Adapter | adaptateur | Zwischenstück | adaptador | adaptador |
| 38 | 40K000004 | 3 | Plug | bouchon | Stopfen | bujão | tapón |
| 39 | [1]83F000006 | 1 | Elbow | coude | Winkelrohr | cotovêlo | codo |
| 40 | [1]89F000005 | 1 | Connector | raccord | Verbindungsstück | ligador | conector |
| 41 | 91F000006 | 2 | O-ring | joint torique | O Ring | anel-O | anillo-O |
| 42 | 91F000008 | 5 | O-ring | joint torique | O Ring | anel-O | anillo-O |

[1] □513E-101➡9999-CAC, 515A-101-CAC&➡

[2] □513F-101-CAC&➡

[3] Ref RSG 165A

[4] Inc 38

[5] Inc 1, 24 & 25

[6] Inc 42 & 20

[7] □Ref RSG 259

666GM 513E-101-CAC➡513G-9999-CAC
666GMGR 515A-101-CAC➡515A-9999-CAC

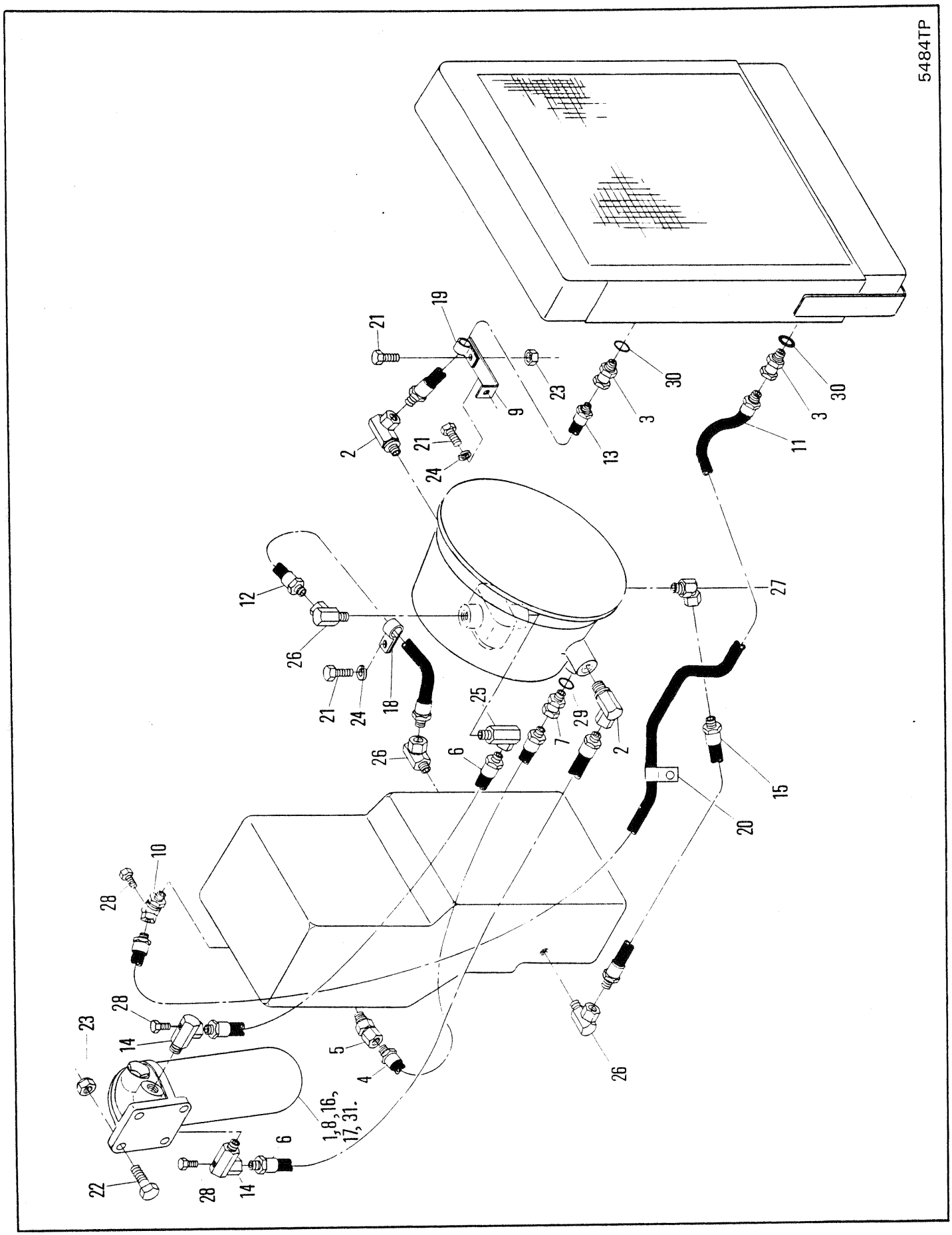
5484TP
1,8,16,
17,31.

# HYDRAULIC SYSTEM, TRANSMISSION & TORQUE CONVERTER
# SYSTÈME HYDRAULIQUE, TRANSMISSION & CONVERTISSEUR
# HYDRAULIKANLAGE GETRIEBE & DREHMOMENTWANDLER
# SISTEMA HIDRÁULICO, TRANSMISSÃO & CONVERSOR DE TORQUE
# SISTEMA HIDRÁULICO, TRANSMISIÓN & CONVERTIDOR DE PAR

| No. | Part No. | Qty | Description | Description | Benennung | Descrição | Descripción |
|---|---|---|---|---|---|---|---|
| 1 | †215502 | 1 | Cartridge kit | ensemble cartouche | Patronensatz | conj cartucho | estuche cartucho |
| 2 | 526676 | 2 | Adapter | adaptateur | Zwischenstück | adaptador | adaptador |
| 3 | 533311 | 2 | Connector | raccord | Verbindungsstück | ligador | conector |
| 4 | 546842 | 1 | Hose | tuyau flexible | Schlauch | mangueira | manguera |
| 5 | 574290 | 1 | Adapter | adaptateur | Zwischenstück | adaptador | adaptador |
| 6 | 583573 | 2 | Hose | tuyau flexible | Schlauch | mangueira | manguera |
| 7 | 690279 | 1 | Adapter | adaptateur | Zwischenstück | adaptador | adaptador |
| 8 | [2,3]1533614 | 1 | Filter | filtre | filter | filtro | filtro |
| 9 | 1900603 | 1 | Bracket LH | support CG | Winkel L | grampo LE | grampa LD |
| 10 | 1901460 | 1 | Adapter | adaptateur | Zwischenstück | adaptador | adaptador |
| 11 | 1901494 | 1 | Hose RH | tuyau flexible D | Schlauch R | mangueira LD | manguera LD |
| 12 | 1901495 | 1 | Hose | tuyau flexible | Schlauch | mangueira | manguera |
| 13 | 1902871 | 1 | Hose LH | tuyau flexible G | Schlauch L | mangueira LE | manguera LI |
| 14 | 1908704 | 2 | Adapter | adaptateur | Zwischenstück | adaptador | adaptador |
| 15 | 1916963 | 1 | Hose | tuyau flexible | Schlauch | mangueira | manguera |
| 16 | [1]†6191839 | 1 | Head | culasse | Kopf | cabeça | cabeza |
| 17 | [1]†6191841 | 1 | Shell | botier | Gehuse | carcaça | carcasa |
| 18 | 6H000028 | 1 | Clip | attache | Schelle | braçadeira | abrazadera |
| 19 | 6H000034 | 1 | Clip | attache | Schelle | braçadeira | abrazadera |
| 20 | 6H000042 | 1 | Clip | attache | Schelle | braçadeira | abrazadera |
| 21 | 17C000614 | 3 | Bolt | boulon | Bolzen | parafuso | bulón |
| 22 | 17C000628 | 4 | Bolt | boulon | Bolzen | parafuso | bulón |
| 23 | 17D000003 | 5 | Nut | écrou | Mutter | porca | tuerca |
| 24 | 24E000006 | 2 | Lockwasher | rondelle frein | Sicherungsscheibe | arruela de pressão | arandela seguridad |
| 25 | 31F000005 | 1 | Adapter | adaptateur | Zwischenstück | adaptador | adaptador |
| 26 | 31F000006 | 3 | Adapter | adaptateur | Zwischenstück | adaptador | adaptador |
| 27 | 33F000006 | 1 | Adapter | adaptateur | Zwischenstück | adaptador | adaptador |
| 28 | 40K000004 | 3 | Plug | bouchon | Stopfen | bujão | tapón |
| 29 | 91F000006 | 1 | O-ring | joint torique | O Ring | anel-O | anillo-O |
| 30 | 91F000008 | 2 | O-ring | joint torique | O Ring | anel-O | anillo-O |
| 31 | 1992218 | 1 | Bolt | boulon | Bolzen | parafuso | bulón |

[1] Ref R.S.G. 165-A

[2] Inc 1, 16 & 17

[3] Ref R.S.G. 259

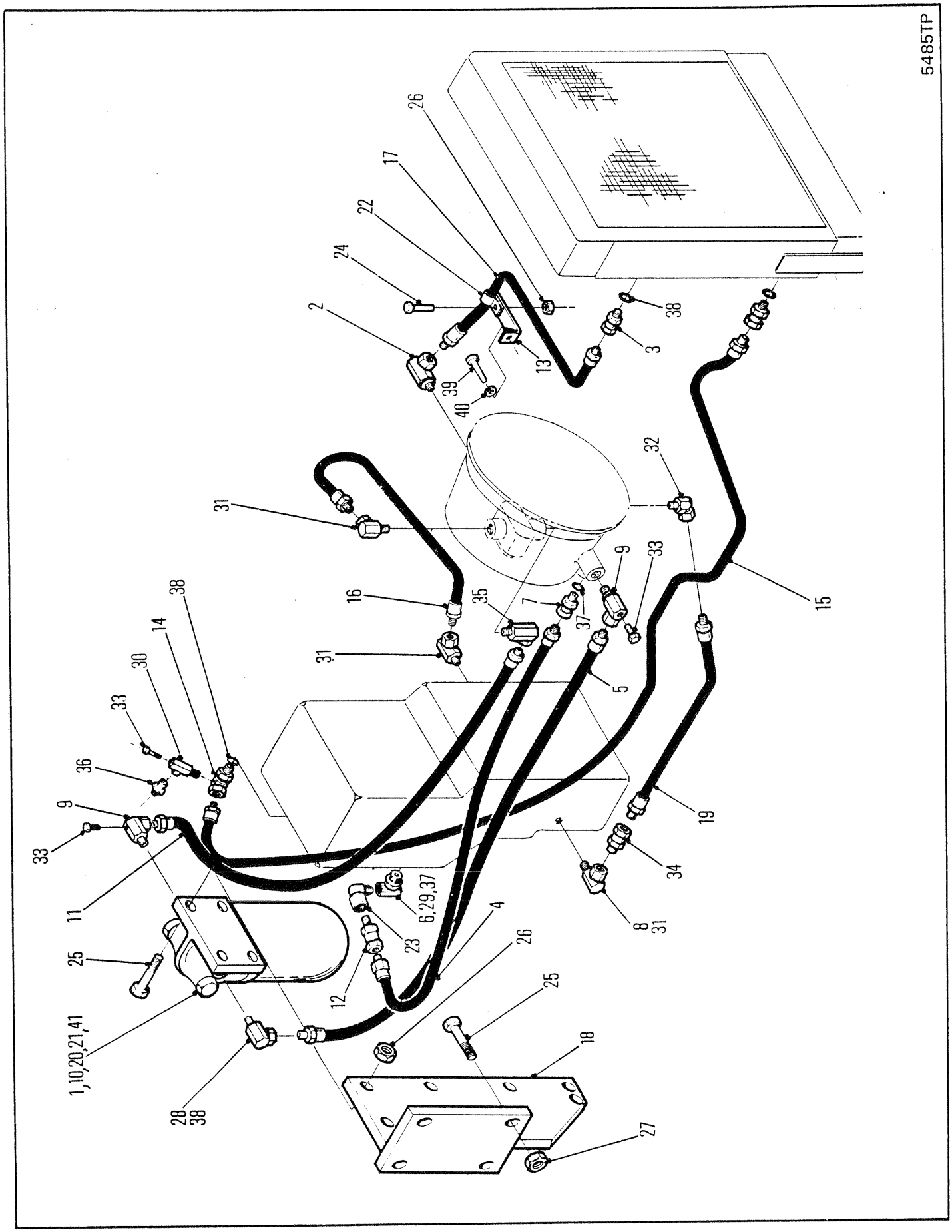
5485TP
26
17
22
24
2
38
3
13
39
40
32
31
9
33
16
35
7
37
15
31
5
38
14
30
33
36
9
33
19
34
11
6,29,37
23
4
8
31
25
12
26
25
1,10,20,21,41
18
28
38
27

# HYDRAULIC SYSTEM, TRANSMISSION & TORQUE CONVERTER
# SYSTÈME HYDRAULIQUE, TRANSMISSION & CONVERTISSEUR
# HYDRAULIKANLAGE GETRIEBE & DREHMOMENTWANDLER
# SISTEMA HIDRÁULICO, TRANSMISSÃO & CONVERSOR DE TORQUE
# SISTEMA HIDRÁULICO, TRANSMISIÓN & CONVERTIDOR DE PAR

| No. | Part No. | Qty | Description | Description | Benennung | Descrição | Descripción |
|---|---|---|---|---|---|---|---|
| 1 | **215502** | 1 | Element | elément | Element | elemento | elemento |
| 2 | **526676** | 1 | Fitting | ajustage | Verbindung | ajuste | accesorio |
| 3 | **533311** | 2 | Fitting | ajustage | Verbindung | ajuste | accesorio |
| 4 | **546842** | 1 | Hose | tuyau flexible | Schlauch | mangueira | manguera |
| 5 | **571000** | 1 | Hose | tuyau flexible | Schlauch | mangueira | manguera |
| 6 | [2]**574290** | 3 | Adaptor | adaptateur | Zwischenstück | adaptador | adaptador |
| 7 | **690279** | 1 | Fitting | ajustage | Verbindung | ajuste | accesorio |
| 8 | [1]**716464** | 1 | Fitting | ajustage | Verbindung | ajuste | accesorio |
| 9 | **1310799** | 2 | Fitting | ajustage | Verbindung | ajuste | accesorio |
| 10 | [4,5]**1533614** | 1 | Filter | filtre | filter | filtro | filtro |
| 11 | **1541607** | 1 | Hose | tuyau flexible | Schlauch | mangueira | manguera |
| 12 | [1]**1542360** | 1 | Adapter | adaptateur | Zwischenstück | adaptador | adaptador |
| 13 | **1900603** | 1 | Bracket | support | Winkel | grampo | grampa |
| 14 | **1901460** | 1 | Fitting | ajustage | Verbindung | ajuste | accesorio |
| 15 | **1901494** | 1 | Hose | tuyau flexible | Schlauch | mangueira | manguera |
| 16 | **1901495** | 1 | Hose | tuyau flexible | Schlauch | mangueira | manguera |
| 17 | **1902871** | 1 | Hose | tuyau flexible | Schlauch | mangueira | manguera |
| 18 | **1911570** | 1 | Bracket | support | Winkel | grampo | grampa |
| 19 | **1916963** | 1 | Hose | tuyau flexible | Schlauch | mangueira | manguera |
| 20 | [3]**6191839** | 1 | Head | culasse | Kopf | cabeça | cabeza |
| 21 | [3]**6191841** | 1 | Shell | botier | Gehuse | carcaça | carcasa |
| 22 | **6H0000034** | 1 | Clip | attache | Schelle | braçadeira | abrazadera |
| 23 | [1]**12K000006** | 1 | Fitting | ajustage | Verbindung | ajuste | accesorio |
| 24 | **17C000614** | 1 | Bolt | boulon | Bolzen | parafuso | bulón |
| 25 | **17C000718** | 1 | Bolt | boulon | Bolzen | parafuso | bulón |
| 26 | **17D000003** | 5 | Nut | écrou | Mutter | porca | tuerca |
| 27 | **17D000004** | 4 | Nut | écrou | Mutter | porca | tuerca |
| 28 | **17K000008** | 1 | Fitting | ajustage | Verbindung | ajuste | accesorio |
| 29 | [1]**21K000006** | 1 | Tee | raccord T | T-Verbindungsstück | te | te |
| 30 | [1]**30F000001** | 1 | Tee | raccord T | T-Verbindungsstück | te | te |
| 31 | [2]**31F000006** | 2 | Fitting | ajustage | Verbindung | ajuste | accesorio |
| 32 | **33F000006** | 1 | Fitting | ajustage | Verbindung | ajuste | accesorio |
| 33 | **40K000004** | 2 | Plug | bouchon | Stopfen | bujão | tapón |
| 34 | [1]**83F000006** | 1 | Adapter | adaptateur | Zwischenstück | adaptador | adaptador |
| 35 | **84F000008** | 1 | Fitting | ajustage | Verbindung | ajuste | accesorio |
| 36 | [1]**89F000005** | 1 | Connector | raccord | Verbindungsstück | ligador | conector |
| 37 | **91F000006** | 1 | O-ring | joint torique | O Ring | anel-O | anillo-O |
| 38 | **91F000008** | 4 | O-ring | joint torique | O Ring | anel-O | anillo-O |
| 39 | --------- | 1 | Bolt | boulon | Bolzen | parafuso | bulón |
| 40 | --------- | 1 | Lockwasher | rondelle frein | Sicherungsscheibe | arruela de pressão | arandela seguridad |
| 41 | **1992218** | 1 | Bolt | boulon | Bolzen | parafuso | bulón |

[1] □500E-101➡9999-CAC

[2] □500F-101-CAC&➡

[3] Ref RSG 165A

[4] Inc 1, 20 & 21

[5] Ref RSG 259

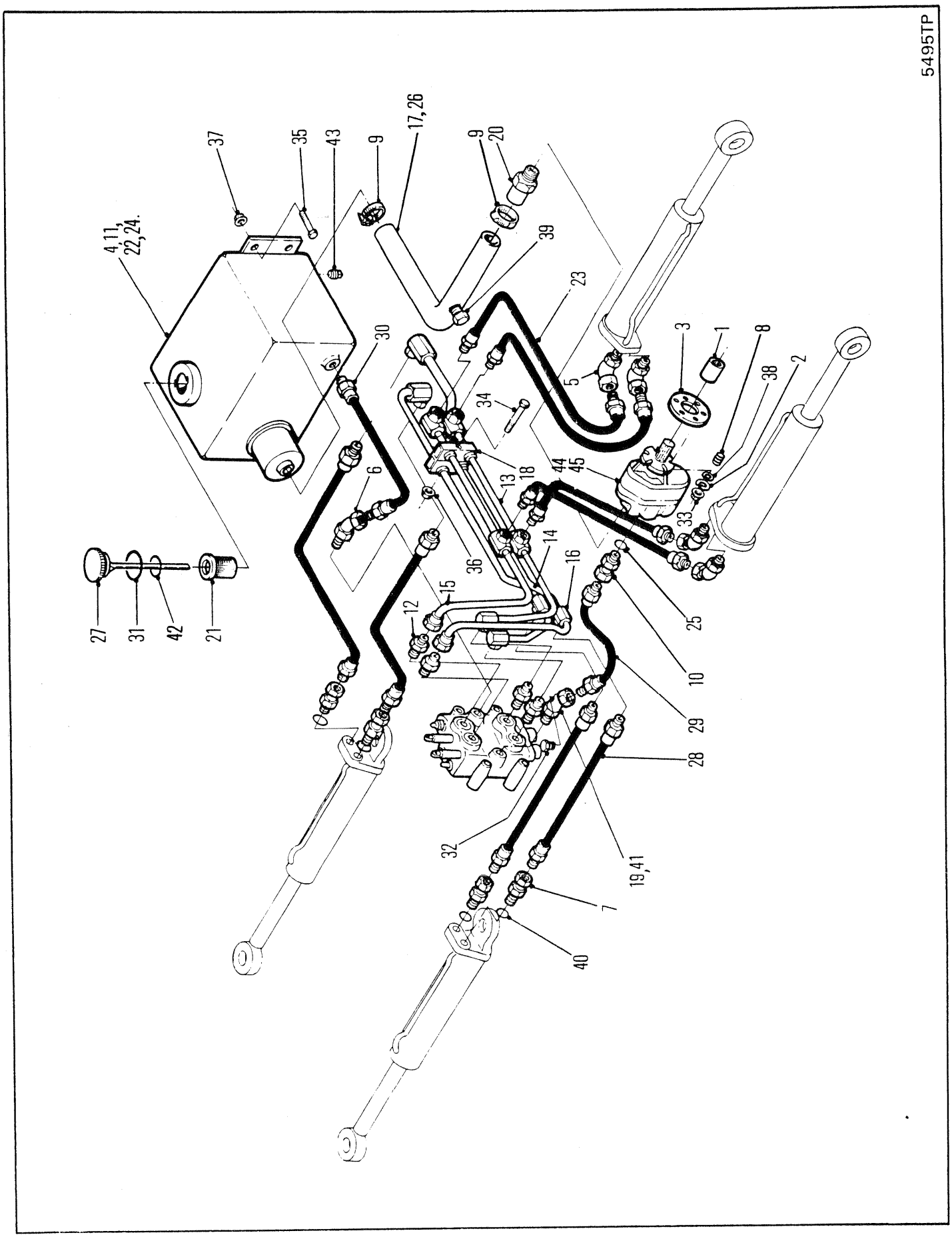
5495TP
4,11,
22,24.
37
35
43
9
17,26
9
20
39
23
30
3
1
8
38
2
5
34
6
18
13
44
45
33
36
14
16
15
12
25
10
29
28
32
19,41
7
40
27
31
42
21

# STEER & BLADE HYDRAULICS
# SYSTÈME HYDRAULIQUE DE DIRECTION & DE PALE
# LENK- & SCHILDHYDRAULIK
# SISTEMA HIDRÁULICO DA DIREÇÃO & DA LÂMINA
# SISTEMA HIDRAULICO DE DIRECCION & DE LAMINA

| No. | Part No. | Qty | Description | Description | Benennung | Descrição | Descripción |
|---|---|---|---|---|---|---|---|
| 1 | 214962 | 1 | Adapter | adaptateur | Zwischenstück | adaptador | adaptador |
| 2 | 4E000006 | 6 | Washer | rondelle | Scheibe | arruela | arandela |
| 3 | 235961 | 1 | Gasket | garniture | Dichtung | gaxeta | empaquetadura |
| 4 | †525293 | 1 | Magnet | aimant | Magnet | imã | imán |
| 5 | 535625 | 4 | Adapter | adaptateur | Zwischenstück | adaptador | adaptador |
| 6 | 583210 | 1 | Elbow | coude | Winkelrohr | cotovêlo | codo |
| 7 | 661564 | 1 | Adapter | adaptateur | Zwischenstück | adaptador | adaptador |
| 8 | 207647 | 6 | Stud | goujon | Stift | prisioneiro | espárrago |
| 9 | 784663 | 2 | Clamp | pince | Schelle | braçadeira | abrazadera |
| 10 | 1520566 | 1 | Adapter | adaptateur | Zwischenstück | adaptador | adaptador |
| 11 | [1]1900128 | 1 | Tank | réservoir | Tank | tanque | tanque |
| 12 | 1900769 | 4 | Connector | raccord | Verbindungsstück | ligador | conector |
| 13 | 1901018 | 1 | Tube | tube | Rohr | tubo | tubo |
| 14 | 1901019 | 1 | Tube | tube | Rohr | tubo | tubo |
| 15 | 1901020 | 1 | Tube | tube | Rohr | tubo | tubo |
| 16 | 1901021 | 1 | Tube | tube | Rohr | tubo | tubo |
| 17 | 1901385 | 1 | Hose | tuyau flexible | Schlauch | mangueira | manguera |
| 18 | 1901396 | 1 | Clamp assy | pince ens | Schelle vollst | conj braçadeira | conj abrazadera |
| 19 | 1901460 | 4 | Elbow | coude | Winkelrohr | cotovêlo | codo |
| 20 | 1901463 | 1 | Adapter | adaptateur | Zwischenstück | adaptador | adaptador |
| 21 | 1901464 | 1 | Strainer | tamis | Sieb | coador | tamiz |
| 22 | [2]1911580 | 1 | Tank | réservoir | Tank | tanque | tanque |
| 23 | 1531929 | 4 | Hose | tuyau flexible | Schlauch | mangueira | manguera |
| 24 | [3]1914243 | 1 | Hydraulic tank | réservoir hydraul | Hydrauliktank | tanque hidráulico | tanque hidráulico |
| 25 | 91F000010 | 1 | O-ring | joint torique | O Ring | anel-O | anillo-O |
| 26 | [4]1915353 | 1 | Tube | tube | Rohr | tubo | tubo |
| 27 | 1915756 | 1 | Cap & Dipstick | bouch et régl-jauge | Kapp & Tauchstab | tampa e vareta | tapa y var inm |
| 28 | 1917340 | 4 | Hose | tuyau flexible | Schlauch | mangueira | manguera |
| 29 | 1918954 | 2 | Hose | tuyau flexible | Schlauch | mangueira | manguera |
| 30 | 1920995 | 1 | Hose | tuyau flexible | Schlauch | mangueira | manguera |
| 31 | 1990901 | 1 | Gasket | garniture | Dichtung | gaxeta | empaquetadura |
| 32 | 40K000004 | 1 | Plug | bouchon | Stopfen | bujão | tapón |
| 33 | 8D000006 | 6 | Nut | écrou | Mutter | porca | tuerca |
| 34 | 17C000544 | 1 | Bolt | boulon | Bolzen | parafuso | bulón |
| 35 | 17C001024 | 4 | Bolt | boulon | Bolzen | parafuso | bulón |
| 36 | 17D000002 | 1 | Nut | écrou | Mutter | porca | tuerca |
| 37 | 17D000009 | 4 | Nut | écrou | Mutter | porca | tuerca |
| 38 | 24E000006 | 6 | Lockwasher | rondelle frein | Sicherungsscheibe | arruela de pressão | arandela seguridad |
| 39 | 24K000007 | 1 | Plug | bouchon | Stopfen | bujão | tapón |
| 40 | 91F000006 | 4 | O-ring | joint torique | O Ring | anel-O | anillo-O |
| 41 | 91F000008 | 4 | O-ring | joint torique | O Ring | anel-O | anillo-O |
| 42 | 1990900 | 1 | Gasket | garniture | Dichtung | gaxeta | empaquetadura |
| 43 | 40K000012 | 1 | Pipe plug | obturateur tuyau | Rohrstopfen | bujão do cano | tapón de cao |
| 44 | [5]--------- | 1 | Pump | pompe | Pumpe | bomba | bomba |

[1] □500D-101➡9999-CAC

[2] □500E-101➡460-CAC, 513E-101➡485-CAC

[3] □500E-461-CAC&➡, 513E-486-CAC&➡, 515A-101➡9999-CAC

[4] □513E-486-CAC&➡, 500E-461-CAC&➡, 515A-101-CAC&➡

[5] Ref S.B. Group 913, No.013, 9/86

666CUM 500D-101-CAC➡500G-9999-CAC
666GM 513E-101-CAC➡513G-9999-CAC 526A-101-CAC➡526A-9999-CAC
666GMGR 515A-101-CAC➡515A-9999-CAC

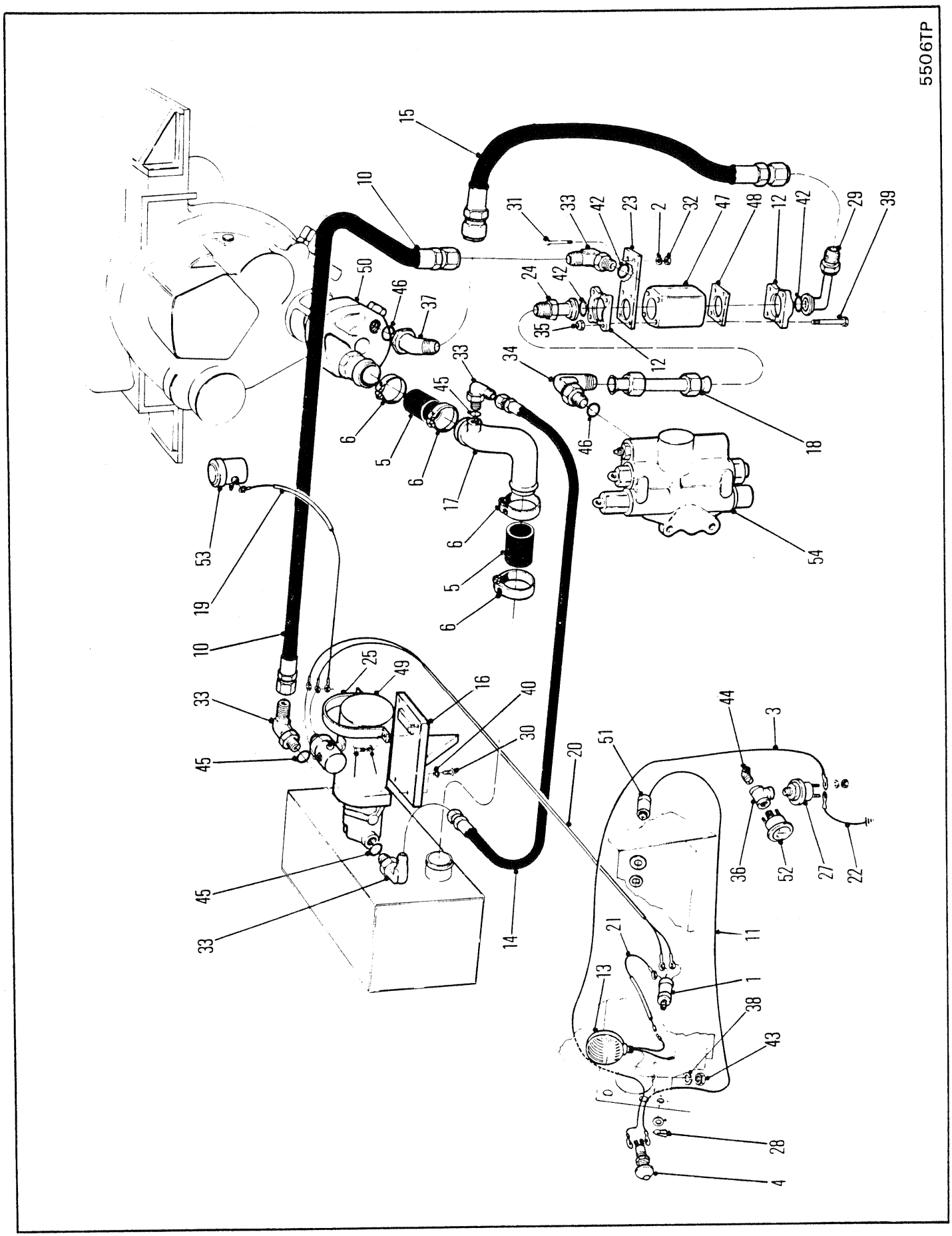
5506TP
15
10
31
33
42
23
2
32
47
48
12
42
29
39
50
46
37
24
42
35
12
34
18
46
54
33
45
6
5
6
17
6
5
6
53
19
10
25
49
16
40
30
33
45
45
33
14
20
51
44
3
36
52
27
22
11
21
13
1
38
43
28
4

## AUXILIARY STEERING ⊠
## DIRECTION AUXILIAIRE ⊠
## HILFSLENKUNG ⊠
## DIREÇÃO AUXILIAR ⊠
## DIRECCION AUXILIAR ⊠

| No. | Part No. | Qty | Description | Description | Benennung | Descrição | Descripción |
|---|---|---|---|---|---|---|---|
| 1 | [1]331196 | 1 | Switch | interrupteur | Schalter | interruptor | interruptor |
| 2 | ‡552914 | - | Shim | cale | Beilage | calço | planchita |
| 3 | 652734 | 1 | Wire | fil | Draht | fio | cable |
| 4 | 656444 | 1 | Light assembly | assemblage élect | Lichteinheit | conj luzes | conj de luces |
| 5 | 774143 | 2 | Hose | tuyau flexible | Schlauch | mangueira | manguera |
| 6 | 784663 | 4 | Clamp | pince | Schelle | braçadeira | abrazadera |
| 7 | [2]†876574 | 1 | Bulb | ampoule | Birne | bulbo | lamparillo |
| 8 | [3]†942746 | 1 | Bulb | ampoule | Birne | bulbo | lamparillo |
| 9 | [3]†990774 | 1 | Lens | lentil | Linse | lente | lente |
| 10 | 1306529 | 1 | Hose | tuyau flexible | Schlauch | mangueira | manguera |
| 11 | 1313998 | 1 | Wire | fil | Draht | fio | cable |
| 12 | 19J000020 | 4 | Flange half | demi-flasque | Flanschhlfte | meia flange | media brida |
| 13 | 1545134 | 1 | Light | lampe | Licht | lâmpada | lámpara |
| 14 | 1915347 | 1 | Hose | tuyau flexible | Schlauch | mangueira | manguera |
| 15 | 1915349 | 1 | Hose | tuyau flexible | Schlauch | mangueira | manguera |
| 16 | 1915352 | 1 | Bracket | support | Winkel | grampo | grampa |
| 17 | 1915353 | 1 | Tube | tube | Rohr | tubo | tubo |
| 18 | 1915354 | 1 | Tube | tube | Rohr | tubo | tubo |
| 19 | 1915391 | 1 | Wire | fil | Draht | fio | cable |
| 20 | 1915392 | 1 | Wire assy | fil ens | Draht Ens | fio conj | cable conj |
| 21 | 1915393 | 1 | Wire | fil | Draht | fio | cable |
| 22 | 1915429 | 1 | Wire | fil | Draht | fio | cable |
| 23 | 1915542 | 1 | Bracket | support | Winkel | grampo | grampa |
| 24 | 1915569 | 1 | Fitting tube | raccord tube | Rohrverbindung | guarnição tubo | accesorio tubo |
| 25 | 1915631 | 1 | Strap | bande | Band | faixa | banda |
| 26 | †1915658 | 1 | Plate | plaque | Platte | placa | placa |
| 27 | 1915715 | 1 | Sender | capteur | Sender | sonda | sonda |
| 28 | 1990984 | 1 | Handle | manette | Handgriff | punho | manija |
| 29 | [4]6002153 | 1 | Tube | tube | Rohr | tubo | tubo |
| 30 | 17C000616 | 4 | Bolt | boulon | Bolzen | parafuso | bulón |
| 31 | 17C000624 | 2 | Bolt | boulon | Bolzen | parafuso | bulón |
| 32 | 17D000003 | 2 | Nut | écrou | Mutter | porca | tuerca |
| 33 | [5]17K000007 | 4 | Fitting | ajustage | Verbindung | ajuste | accesorio |
| 34 | [6]17K000008 | 1 | Fitting | ajustage | Verbindung | ajuste | accesorio |
| 35 | 18D000007 | 4 | Nut | écrou | Mutter | porca | tuerca |
| 36 | 18F000001 | 1 | Fitting | ajustage | Verbindung | ajuste | accesorio |
| 37 | [6]18K000010 | 1 | Fitting | ajustage | Verbindung | ajuste | accesorio |
| 38 | 23E000008 | 1 | Lockwasher | rondelle frein | Sicherungsscheibe | arruela de pressão | arandela seguridad |
| 39 | 18C000788 | 4 | Bolt | boulon | Bolzen | parafuso | bulón |
| 40 | 24E000006 | 2 | Lockwasher | rondelle frein | Sicherungsscheibe | arruela de pressão | arandela seguridad |
| 41 | †25E000018 | 4 | Washer | rondelle | Scheibe | arruela | arandela |
| 42 | 58K000222 | 2 | O-Ring | joint torique | O Ring | anel-O | anillo-O |
| 43 | 64D000008 | 1 | Nut | écrou | Mutter | porca | tuerca |
| 44 | 84E000003 | 1 | Fitting | ajustage | Verbindung | ajuste | accesorio |
| 45 | 91F000007 | 5 | O-ring | joint torique | O Ring | anel-O | anillo-O |
| 46 | 91F000010 | 5 | O-ring | joint torique | O Ring | anel-O | anillo-O |
| 47 | O--------- | - | Check valve | soupape de sureté | Rückshlagventile | válvula de esbarro | válv retención |
| 48 | --------- | - | Plate | plaque | Platte | placa | placa |
| 49 | O--------- | - | Pump assy | ens pompe | Pumpeinheit | cj bomba | cj bomba |
| 50 | O--------- | - | Pump main hyd | pompe hydr principal | Haupt Hydr Pumpe | principal hidr bomba | bomba mátriz hidraul |
| 51 | O--------- | - | Ignition switch | interr dallumage | Zundschalter | chava de ignição | inter encendido |
| 52 | O--------- | - | Gauge oil press | jauge press huile mot | Oldruckmesser Mot | manôm óleo motor | manóm aceite motor |
| 53 | O--------- | - | Starter solenoid | solén demarrage | Anlschltmagnt | solen arrangque | solen arranque |
| 54 | O--------- | - | Valve | soupape | Ventil | válvula | válvula |

[1] Inc 28

[2] Inc 4

[3] Inc 13

[4] Inc 42

[5] Inc 45

[6] Inc 46

666CUM 500E-101-CAC→500G-9999-CAC
666GM 513E-101-CAC→513G-9999-CAC

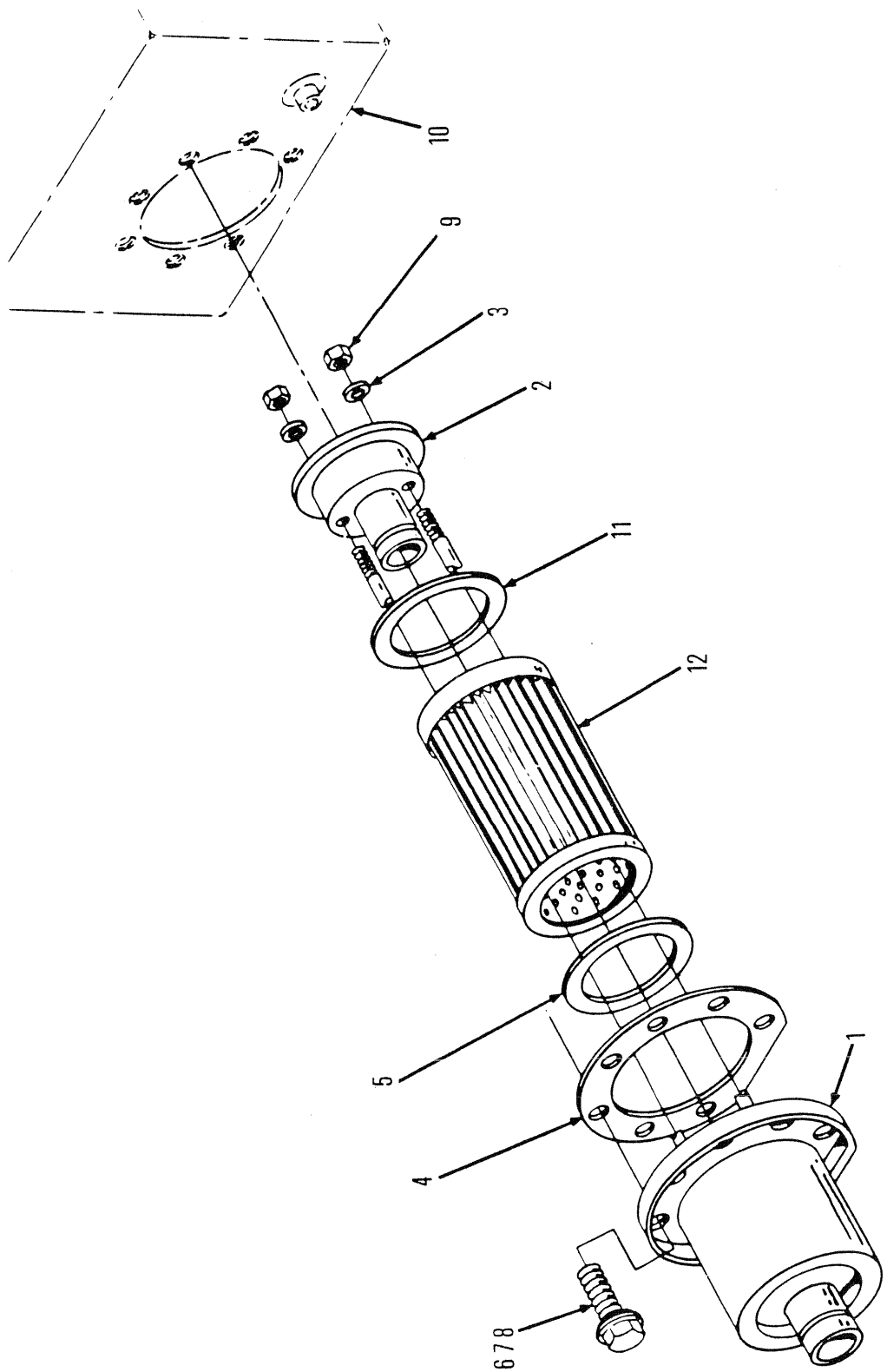
5511TP
10
9
3
2
11
12
5
1
4
6 7 8

# HYDRAULIC TANK FILTER ASSEMBLY
# ENSEMBLE FILTRE RÉSERVOIR HYDRAULIQUE
# HYDRAULIKTANKEINHEIT
# CONJUNTO DO TANQUE HIDRÁULICO
# ESTRUCTURA DEL TANQUE HIDRÁULICO

| No. | Part No. | Qty | Description | Description | Benennung | Descrição | Descripción |
|---|---|---|---|---|---|---|---|
| A | [1,3]798781 | | Filter assy | ens du filtre | Filter vollst | conj do filtro | conj de filtro |
| B | [2,3]888331 | - | Cartridge kit | ensemble cartouche | Patronensatz | conj cartucho | estuche cartucho |
| 1 | 141675 | 1 | Cover | couvercle | Deckel | tampa | tapa |
| 2 | 142062 | 1 | Valve | soupape | Ventil | válvula | válvula |
| 3 | 791837 | 2 | Washer | rondelle | Scheibe | arruela | arandela |
| 4 | [5]§------- | 1 | Gasket | garniture | Dichtung | gaxeta | empaquetadura |
| 5 | §------- | 1 | Gasket | garniture | Dichtung | gaxeta | empaquetadura |
| 6 | †1917455 | 7 | Seal | joint étanchéité | Dichtung | vedador | sello |
| 7 | [4]1917706 | 7 | Bolt | boulon | Bolzen | parafuso | bulón |
| 8 | †1917707 | 7 | Bolt | boulon | Bolzen | parafuso | bulón |
| 9 | 44D000004 | 2 | Nut | écrou | Mutter | porca | tuerca |
| 10 | ○--------- | - | Hydraulic tank | réservoir hydraul | Hydrauliktank | tanque hidráulico | tanque hidráulico |
| 11 | [5]§--------- | 1 | Gasket | garniture | Dichtung | gaxeta | empaquetadura |
| 12 | [5]§--------- | 1 | Element | elément | Element | elemento | elemento |

[1] Inc 1➞5,9,11 & 12

[2] Inc 3,4,5, 11 & 12

[3] 2 filters are required for model 668. Quantities listed are for 1 filter
[3] 2 filtres son nécessaires pour le modèle 668. Les quantités indiquées
[3] Zwei Filter werden für das Modell 668 benötigt. Die angeführten sind
[3] Exigem-se 2 filtros para o modelo 668. As qauantidades indicadas são para 1 filtro
[3] Se necesitan 2 filtros para el modelo 668. Las cantidades enumeradas son para 1 filtro.

[4] Inc 6 & 8

[5] See B
[5] Voir B
[5] Siehe B
[5] Veja B
[5] Véase B

666GM 513E-101-CAC➞513G-9999-CAC
666GMGR 515A-101-CAC➞515A-9999-CAC

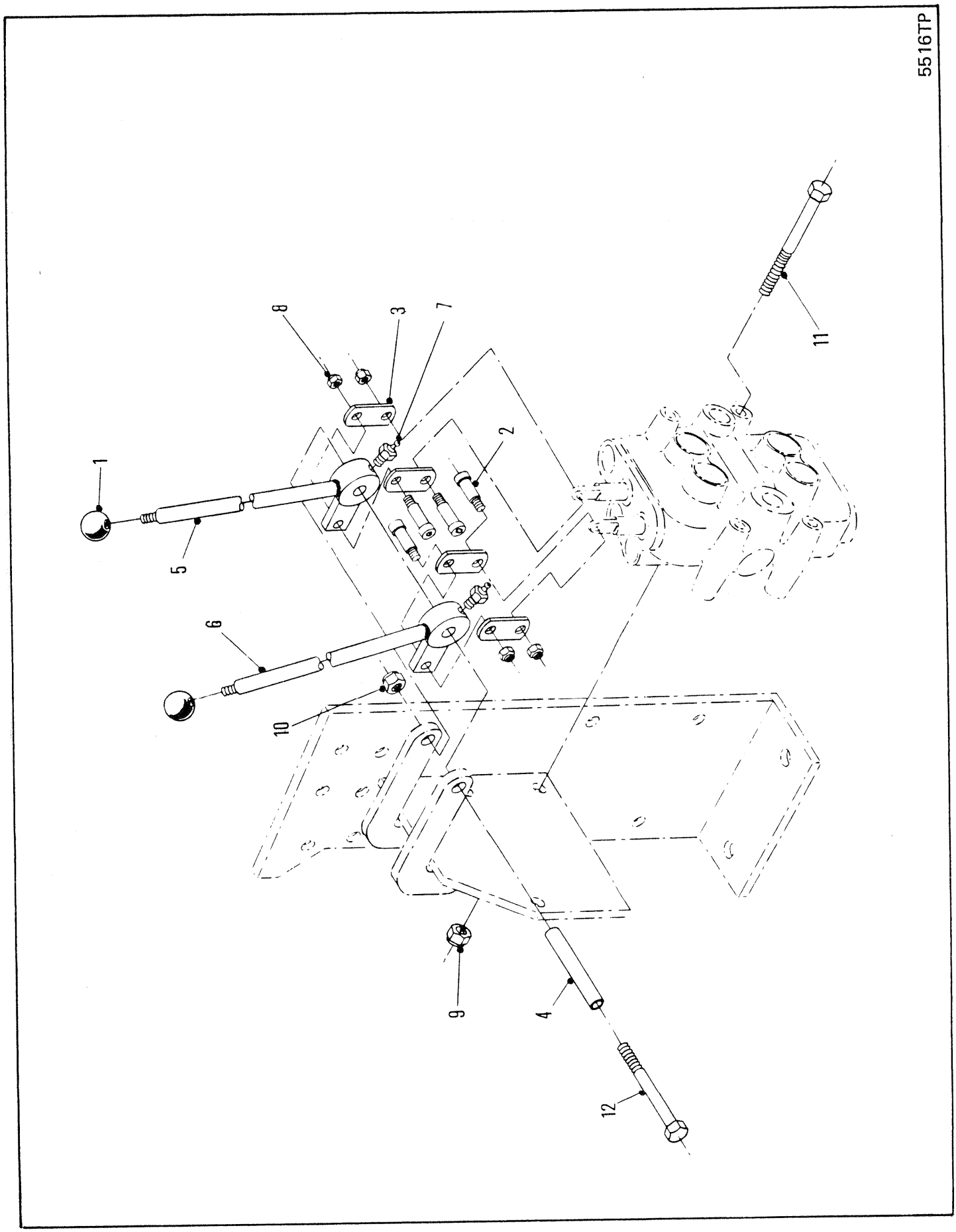
5516TP
1
2
3
4
5
6
7
8
9
10
11
12

## STEER & BLADE CONTROLS
## CONTRÔLES DE GUIDAGE ET DE LAME
## LENK UND BLATTSTEUERUNG
## CONTRÔLES DE DIREÇÃO E LÂMINA
## MANDOS DE DIRECCIÓN Y CUCHILLAS

| No. | Part No. | Qty | Description | Description | Benennung | Descrição | Descripción |
|---|---|---|---|---|---|---|---|
| 1 | **509772** | 2 | Knob | bouton | Knopf | manípula | botón |
| 2 | **1304040** | 4 | Bolt | boulon | Bolzen | parafuso | bulón |
| 3 | **1900510** | 4 | Link | articulation | Gelenk | articulação | articulación |
| 4 | **1900903** | 1 | Sleeve | manchon | Muffe | luva | manguito |
| 5 | **1902071** | 1 | Lever | levier | Hebel | alavanca | palanca |
| 6 | **1902072** | 1 | Lever | levier | Hebel | alavanca | palanca |
| 7 | **10H000025** | 2 | Fitting | ajustage | Verbindung | ajuste | accesorio |
| 8 | **17D000001** | 4 | Nut | écrou | Mutter | porca | tuerca |
| 9 | **18D000006** | 3 | Nut | écrou | Mutter | porca | tuerca |
| 10 | **18D000008** | 1 | Nut | écrou | Mutter | porca | tuerca |
| 11 | **18C000672** | 3 | Bolt | boulon | Bolzen | parafuso | bulón |
| 12 | **18C000864** | 1 | Bolt | boulon | Bolzen | parafuso | bulón |

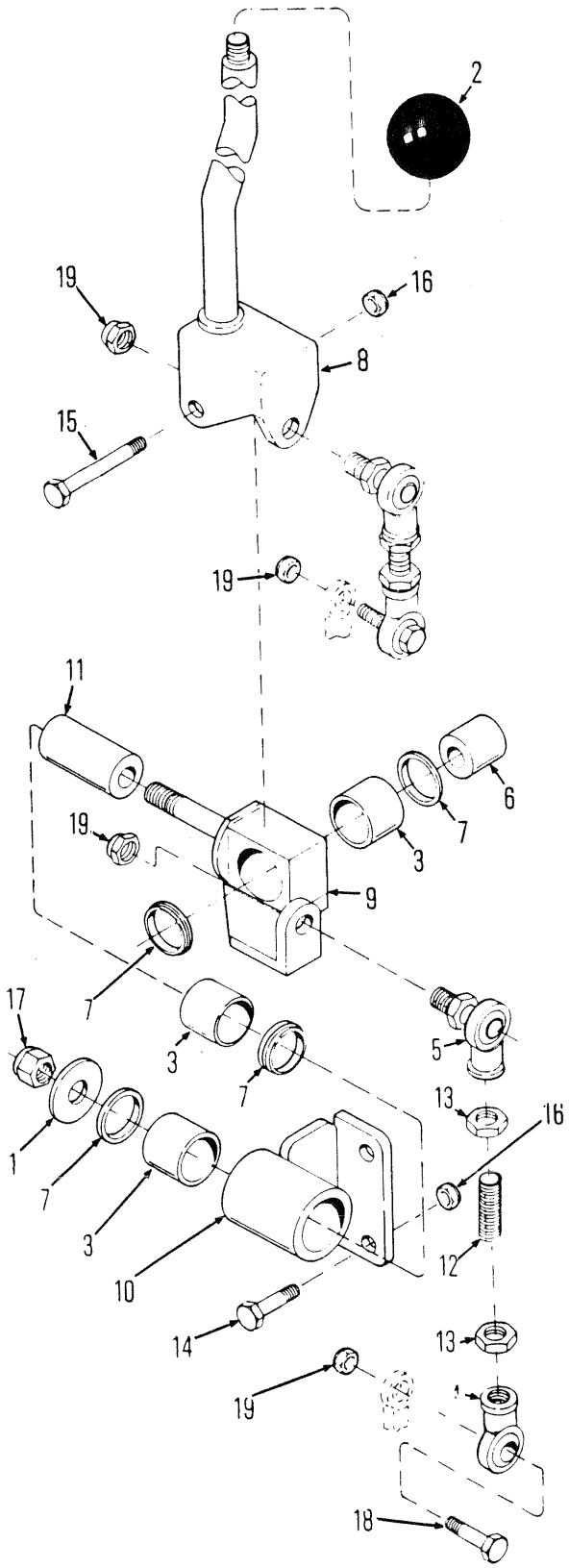


5518TP

## STEER & BLADE CONTROLS
## CONTRÔLES DE GUIDAGE ET DE LAME
## LENK UND BLATTSTEUERUNG
## CONTRÔLES DE DIREÇÃO E LÂMINA
## MANDOS DE DIRECCIÓN Y CUCHILLAS

| No. | Part No. | Qty | Description | Description | Benennung | Descrição | Descripción |
|---|---|---|---|---|---|---|---|
| 1 | **201497** | 1 | Washer | rondelle | Scheibe | arruela | arandela |
| 2 | **509772** | 1 | Knob | bouton | Knopf | manípula | botón |
| 3 | **675227** | 3 | Bearing | palier | Lager | mancal | cojinete |
| 4 | **1930079** | 2 | Rod end | bout biellette | Stangenende | extremidade haste | estremo de varilla |
| 5 | **1317408** | 2 | Rod end | bout biellette | Stangenende | extremidade haste | estremo de varilla |
| 6 | **1503251** | 1 | Sleeve | manchon | Muffe | luva | manguito |
| 7 | **1522535** | 4 | Seal | joint étanchéité | Dichtung | vedador | sello |
| 8 | **1909742** | 1 | Lever | levier | Hebel | alavanca | palanca |
| 9 | **1909745** | 1 | Pivot | pivot | Zapfen | perno | muón |
| 10 | **1909947** | 1 | Bracket | support | Winkel | grampo | grampa |
| 11 | **1911588** | 1 | Sleeve | manchon | Muffe | luva | manguito |
| 12 | **1911589** | 2 | Stud | goujon | Stift | prisioneiro | espárrago |
| 13 | **8D0000005** | 4 | Nut | écrou | Mutter | porca | tuerca |
| 14 | **17C000828** | 2 | Bolt | boulon | Bolzen | parafuso | bulón |
| 15 | **17C000840** | 1 | Bolt | boulon | Bolzen | parafuso | bulón |
| 16 | **17D000006** | 3 | Nut | écrou | Mutter | porca | tuerca |
| 17 | **18D000008** | 1 | Nut | écrou | Mutter | porca | tuerca |
| 18 | **18C000520** | 2 | Bolt | boulon | Bolzen | parafuso | bulón |
| 19 | **66D000005** | 4 | Nut | écrou | Mutter | porca | tuerca |

666CUM 500E-101-CAC→500H-9999-CAC
666GM 513E-101-CAC→513H-9999-CAC
666GMGR 515A-101-CAC→515A-9999-CAC

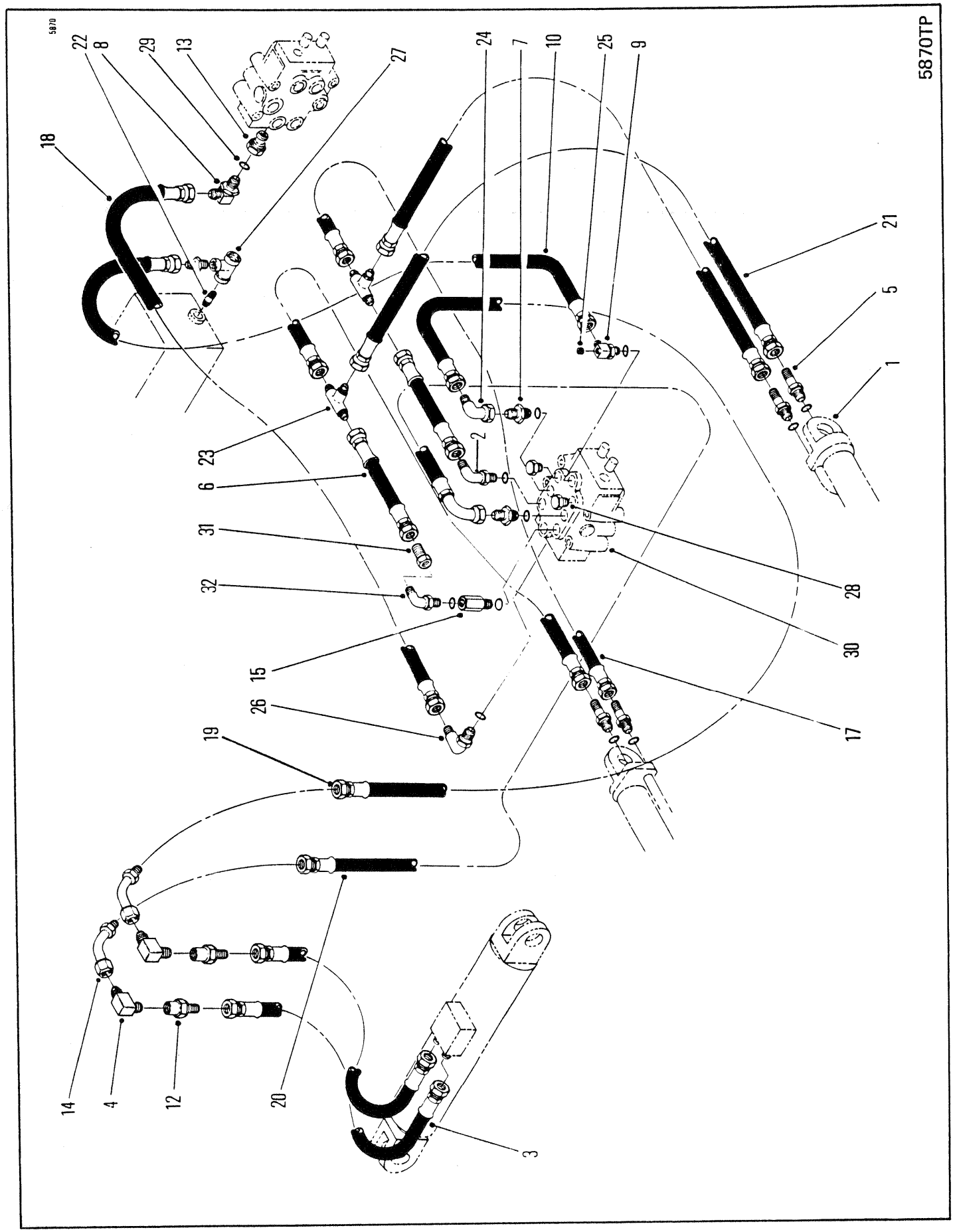
5870
5870TP
22
8
29
13
27
24
7
10
25
9
18
21
5
1
23
2
6
31
32
28
30
15
26
17
19
14
4
12
20
3

# HYDRAULICS-ARCH & GRAPPLE
# HYDRAULIQUES-ARC ET GRAPPIN
# HYDRAULIK-BOGEN UND GREIFER
# HIDRÁULICA-ARCO E GARRA
# HIDRÁULICA-ARCO Y GARRA

| No. | Part No. | Qty | Description | Description | Benennung | Descrição | Descripción |
|---|---|---|---|---|---|---|---|
| 1 | ○--------- | - | Cylinder | cylindre | Zylinder | cilindro | cilindro esclavo |
| 2 | **656532** | 1 | Fitting | ajustage | Verbindung | ajuste | accesorio |
| 3 | **672554** | 2 | Hose | tuyau flexible | Schlauch | mangueira | manguera |
| 4 | **730149** | 2 | Fitting | ajustage | Verbindung | ajuste | accesorio |
| 5 | **731793** | 4 | Fitting | ajustage | Verbindung | ajuste | accesorio |
| 6 | **731900** | 2 | Hose assy | ens tuyaux souples | Schlauch vollst | conj mangueira | conj manguera |
| 7 | **755055** | 2 | Fitting | ajustage | Verbindung | ajuste | accesorio |
| 8 | **1300309** | 1 | Fitting | ajustage | Verbindung | ajuste | accesorio |
| 9 | **1302005** | 1 | Fitting | ajustage | Verbindung | ajuste | accesorio |
| 10 | **1320982** | 1 | Hose assy | ens tuyaux souples | Schlauch vollst | conj mangueira | conj manguera |
| 11 | †**1736910** | 2 | Tie | attache | Haft | liame | atadura |
| 12 | **1905619** | 2 | Swivel joint | joint émerillon | Drehzapfen | junta articulada | unión articulada |
| 13 | [1]**1905942** | 1 | Fitting | ajustage | Verbindung | ajuste | accesorio |
| 14 | **1906408** | 2 | Tube assy | assemblage de tube | Rohreinheit | conjunto de tubos | conjunto del tubo |
| 15 | **1907267** | 1 | Valve | soupape | Ventil | válvula | válvula |
| 16 | †**1908558** | 4 | Hose | tuyau flexible | Schlauch | mangueira | manguera |
| 17 | **1915298** | 2 | Hose assy | ens tuyaux souples | Schlauch vollst | conj mangueira | conj manguera |
| 18 | **1915300** | 1 | Hose assy | ens tuyaux souples | Schlauch vollst | conj mangueira | conj manguera |
| 19 | **1915302** | 1 | Hose | tuyau flexible | Schlauch | mangueira | manguera |
| 20 | **1915303** | 1 | Hose | tuyau flexible | Schlauch | mangueira | manguera |
| 21 | **3225728** | 2 | Hose assy | ens tuyaux souples | Schlauch vollst | conj mangueira | conj manguera |
| 22 | **5K0000624** | 1 | Nipple | raccord | Nippel | niple | niple |
| 23 | **10K000008** | 1 | Fitting | ajustage | Verbindung | ajuste | accesorio |
| 24 | **11K000007** | 1 | Fitting | ajustage | Verbindung | ajuste | accesorio |
| 25 | **16F000004** | 1 | Fitting | ajustage | Verbindung | ajuste | accesorio |
| 26 | **17K000008** | 3 | Fitting | ajustage | Verbindung | ajuste | accesorio |
| 27 | **18F000005** | 1 | Fitting | ajustage | Verbindung | ajuste | accesorio |
| 28 | **24K000008** | 2 | Fitting | ajustage | Verbindung | ajuste | accesorio |
| 29 | **91F000008** | 11 | O-ring | joint torique | O Ring | anel-O | anillo-O |
| 30 | ○--------- | - | Control valve | soupape de contrôle | Steuerventil | válv de contr | valv de control |
| 31 | **15K000008** | 1 | Connector | raccord | Verbindungsstück | ligador | conector |
| 32 | **13K000008** | 1 | Fitting | ajustage | Verbindung | ajuste | accesorio |

[1] Inc 1 - 91F000010 O-Ring & 1 - 58K000119 O-Ring
[1] Inc 1 - 91F000010 joint torique & 1 - 58K000119 joint torique
[1] Inc 1 - 91F000010 O-Ring & 1 - 58K000119 O-Ring
[1] Inc 1 - 91F000010 anel-O & 1 - 58K000119 anel-O
[1] Inc 1 - 91F000010 anillo-O & 1 - 58K000119 anillo-O

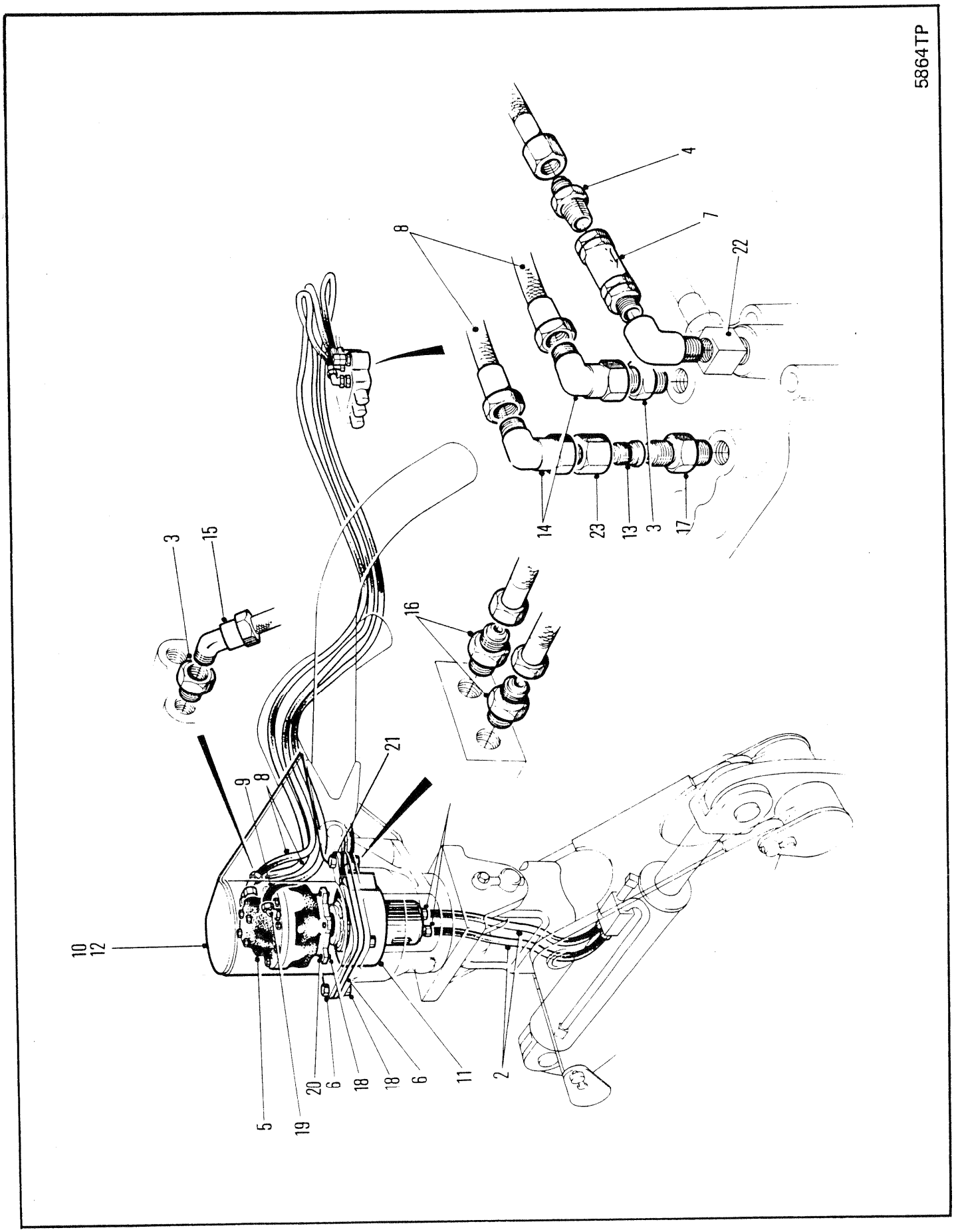
5864TP
4
7
22
8
14
23
13
3
17
3
15
16
21
9
8
10
12
5
19
20
6
18
18
6
11
2
4

# HYDRAULICS-MOTOR HEAD
# HYDRAULIQUES-CULLASSE DE MOTEUR
# HYDRAULIK-MOTORENKOPF
# HIDRAULICA-CABEÇA DO MOTOR
# HIDRAULICA-CABEZA DEL MOTOR

| No. | Part No. | Qty | Description | Description | Benennung | Descrição | Descripción |
|---|---|---|---|---|---|---|---|
| 1 | †300225 | 2 | Roll pin | goupille de roulée | Rollenbolzen | pino de rolo | pasador rodillo |
| 2 | 661570 | 2 | Hose | tuyau flexible | Schlauch | mangueira | manguera |
| 3 | 755054 | 2 | Adaptor | adaptateur | Zwischenstück | adaptador | adaptador |
| 4 | 774433 | 1 | Fitting | ajustage | Verbindung | ajuste | accesorio |
| 5 | 1905501 | 1 | Motor head | culasse de moteur | motorenkopf | cabea do motor | cabeza del motor |
| 6 | 1906374 | 1 | Mounting plate | plaque de fixation | Befestigungsplatte | placa de fixação | placa de montage |
| 7 | 1907709 | 1 | Check valve | soupape de sureté | Rückshlagventile | válvula de esbarro | válv retención |
| 8 | 1915299 | 2 | Hose | tuyau flexible | Schlauch | mangueira | manguera |
| 9 | 1915301 | 1 | Hose | tuyau flexible | Schlauch | mangueira | manguera |
| 10 | [2]1915696 | 1 | Shroud | enveloppe | Umkleidung | proteção | envolvente |
| 11 | 1916920 | 1 | Housing | botier | Gehuse | carcaça | carcasa |
| 12 | [3]1923921 | 1 | Shroud | enveloppe | Umkleidung | proteção | envolvente |
| 13 | 9K0000008 | 1 | Fitting | ajustage | Verbindung | ajuste | accesorio |
| 14 | 11K000006 | 2 | Elbow | coude | Winkelrohr | cotovêlo | codo |
| 15 | 12K000006 | 2 | Elbow | coude | Winkelrohr | cotovêlo | codo |
| 16 | 15K000007 | 4 | Fitting | ajustage | Verbindung | ajuste | accesorio |
| 17 | 15K000008 | 1 | Adaptor | adaptateur | Zwischenstück | adaptador | adaptador |
| 18 | 17D000006 | 7 | Nut | écrou | Mutter | porca | tuerca |
| 19 | 17K000003 | 1 | Elbow | coude | Winkelrohr | cotovêlo | codo |
| 20 | 17C000828 | 3 | Bolt | boulon | Bolzen | parafuso | bulón |
| 21 | 17C000840 | 4 | Bolt | boulon | Bolzen | parafuso | bulón |
| 22 | 29F000001 | 1 | Elbow | coude | Winkelrohr | cotovêlo | codo |
| 23 | 80F000008 | 1 | Nut | écrou | Mutter | porca | tuerca |
| 24 | [1]†16F000004 | 1 | Plug | bouchon | Stopfen | bujão | tapón |
| 25 | [1]†24K000008 | 1 | Plug | bouchon | Stopfen | bujão | tapón |

[1] When self-centering mechanism is used replace 1915301 hose & 1915299 hose with 1-16F000004 plug & 1-24K000008 plug at the control valve ports
[1] Lors de l'utilisation du mécanisme à centrage automatique, remplacer le tuyau 1915301 et le tuyau 1915299 par le bouchon 1-16F000004 et le bouchon
[1] Bei Benutzung des automatisch zentrierten Mechanismus, sind Schläuche Nr 1915301 und 1915299 durch stopfen Nr 1-16F000004 und
[1] Ao ser utilizado o mecanismo de centragem automática, substitua a mangueira 1915301 e a mangueira 1915299 por um bujão 1-16F000004
[1] Cuando se usa un mecanismo autocentrador, substityase la manguera 1915301 y la manguera 1915299 por el tapón 1-16F000004

[2] 666GR

[3] 664GR

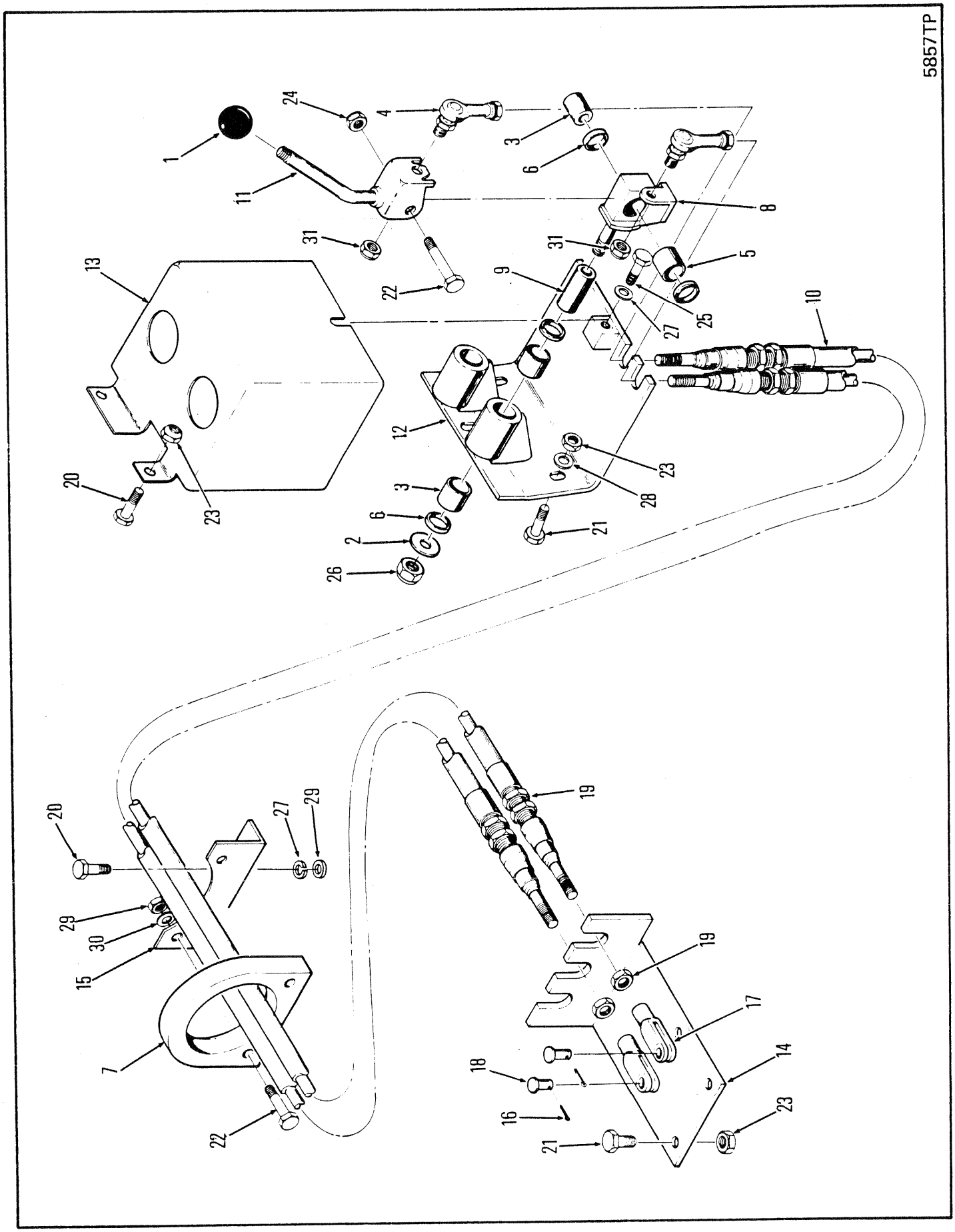
5857TP
1
2
3
4
5
6
7
8
9
10
11
12
13
14
15
16
17
18
19
20
21
22
23
24
25
26
27
28
29
30
31

## CONTROLS-ARCH & GRAPPLE
## CONTRÔLES-ARC ET GRAPIN
## STEUERUNGEN-BOGEN UND GREIFER
## CONTRÖLES-ARCO E GARRA
## MANDOS-ARCO Y GARRA

| No. | Part No. | Qty | Description | Description | Benennung | Descrição | Descripción |
|---|---|---|---|---|---|---|---|
| 1 | **509772** | 1 | Knob | bouton | Knopf | manípula | botón |
| 2 | **561912** | 1 | Washer | rondelle | Scheibe | arruela | arandela |
| 3 | **675227** | 3 | Needle bearing | palier à aiguilles | Nadellager | mancal de agulha | cojinete de agujas |
| 4 | **1317408** | 2 | Rod end | bout biellette | Stangenende | extremidade haste | estremo de varilla |
| 5 | **1503251** | 1 | Sleeve | manchon | Muffe | luva | manguito |
| 6 | **1522535** | 4 | Seal | joint étanchéité | Dichtung | vedador | sello |
| 7 | **1907507** | 1 | Guard | protecteur | Schutz | proteção | protector |
| 8 | **1909745** | 1 | Pivot | pivot | Zapfen | perno | muón |
| 9 | **1911588** | 1 | Sleeve | manchon | Muffe | luva | manguito |
| 10 | **1914678** | 2 | Push-pull cable | cab comp-tract | Gegentaktkable | cabo empurra-puxa | cable empuje-jale |
| 11 | **1914725** | 1 | Control lever | controle á levier | Hebelsteuerung | alavanca control | control de palanca |
| 12 | **1914728** | 1 | Bracket | support | Winkel | grampo | grampa |
| 13 | **1914731** | 1 | Cover | couvercle | Deckel | tampa | tapa |
| 14 | **1915346** | 1 | Plate | plaque | Platte | placa | placa |
| 15 | **1915566** | 1 | Bracket | support | Winkel | grampo | grampa |
| 16 | **1F000308** | 2 | Pin | goupille | Stift | pino | pasador |
| 17 | **2J005204** | 2 | Clevis | étrier | Schkel | garfo | horquilla |
| 18 | **4F005062** | 2 | Pin | goupille | Stift | pino | pasador |
| 19 | **8D000005** | 6 | Nut | écrou | Mutter | porca | tuerca |
| 20 | **17C000616** | 4 | Bolt | boulon | Bolzen | parafuso | bulón |
| 21 | **17C000620** | 7 | Bolt | boulon | Bolzen | parafuso | bulón |
| 22 | **17C000840** | 3 | Bolt | boulon | Bolzen | parafuso | bulón |
| 23 | **59D000006** | 9 | Locknut | contre-écrou | Gegenmutter | contra porca | contratuerca |
| 24 | **59D000008** | 3 | Locknut | contre-écrou | Gegenmutter | contra porca | contratuerca |
| 25 | **18C000616** | 1 | Bolt | boulon | Bolzen | parafuso | bulón |
| 26 | **18D000008** | 1 | Locknut | contre-écrou | Gegenmutter | contra porca | contratuerca |
| 27 | **24E000006** | 1 | Lockwasher | rondelle frein | Sicherungsscheibe | arruela de pressão | arandela seguridad |
| 28 | **25E000017** | 3 | Flatwasher | rondelle plate | Unterlegscheibe | arruela chata | arandela plana |
| 29 | **27E000006** | 2 | Flatwasher | rondelle plate | Unterlegscheibe | arruela chata | arandela plana |
| 30 | **27E000008** | 2 | Flatwasher | rondelle plate | Unterlegscheibe | arruela chata | arandela plana |
| 31 | **66D000005** | 2 | Locknut | contre-écrou | Gegenmutter | contra porca | contratuerca |

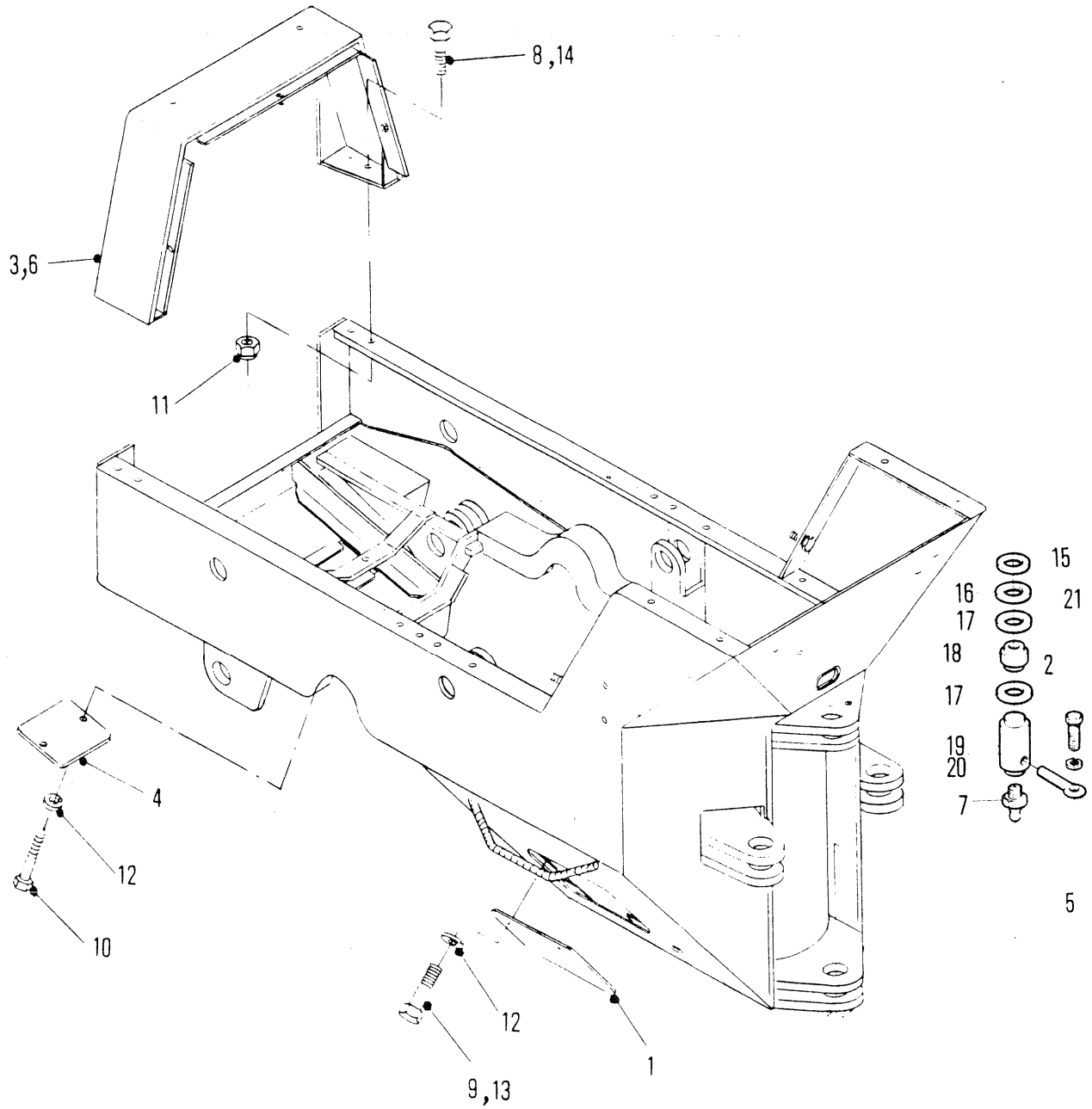


5585TP

# FRONT FRAME
# CHÂSSIS AVANT & ARRIÈRE
# RAHMEN, VORDER & HINTER
# CHASSI DIANTEIRO & TRASEIRO
# BASTIDOR DELANTERO & TRASERO

| No. | Part No. | Qty | Description | Description | Benennung | Descrição | Descripción |
|---|---|---|---|---|---|---|---|
| A | [1]------- | 1 | Frame | châssis | Fahrgestell | chassi | bastidor |
| 1 | 1900963 | 2 | Plate | plaque | Platte | placa | placa |
| 2 | 24E000008 | 2 | Lockwasher | rondelle frein | Sicherungsscheibe | arruela de pressão | arandela seguridad |
| 3 | 1900990 | 1 | Grille | grille | Grill | grade | careta |
| 4 | 1901505 | 2 | Plate | plaque | Platte | placa | placa |
| 5 | [2]586452 | 2 | Lockpin | goupille de blocage | Sperrstift | pino de trava | pasador de seguridad |
| 6 | [2]1903128 | 1 | Grille | grille | Grill | grade | careta |
| 7 | 10H000025 | 2 | Grease fitting | graisseur | Nippel Schmier | graxeira | grasera |
| 8 | 17C001032 | 4 | Bolt | boulon | Bolzen | parafuso | bulón |
| 9 | 17C001224 | 8 | Bolt | boulon | Bolzen | parafuso | bulón |
| 10 | 17C001228 | 4 | Bolt | boulon | Bolzen | parafuso | bulón |
| 11 | 17D000009 | 4 | Nut | écrou | Mutter | porca | tuerca |
| 12 | 24E000012 | 8 | Lockwasher | rondelle frein | Sicherungsscheibe | arruela de pressão | arandela seguridad |
| 13 | 24E000027 | 4 | Washer | rondelle | Scheibe | arruela | arandela |
| 14 | 25E000025 | 4 | Washer | rondelle | Scheibe | arruela | arandela |
| 15 | ‡1901079 | - | Shim | cale | Beilage | calço | planchita |
| 16 | ‡1900168 | - | Washer | rondelle | Scheibe | arruela | arandela |
| 17 | 1900167 | 4 | Washer | rondelle | Scheibe | arruela | arandela |
| 18 | 1574466 | 2 | Bushing | chemise | Buchse | bucha | buje |
| 19 | [3]1915205 | 1 | Pin | goupille | Stift | pino | pasador |
| 20 | [4]1915214 | 1 | Pin | goupille | Stift | pino | pasador |
| 21 | 1915786 | 2 | Bolt | boulon | Bolzen | parafuso | bulón |

[1] Contact Service Dept. if Frame number is required
[1] Consultez le Service d'Entretien s'il vous faut le numére de châssis
[1] Wenden Sie sich an die Service-Abteilung falls Sie die Fahrgestellnummer brauchen.
[1] Procure o Departamento de Serviço se o número do chassi é solicitado
[1] Consulte con el Departamento de Servicio si se requiere el número del bastidor.

[2] □Cum

[3] Upper Hinge
[3] Articulation supérieure
[3] Oberes Scharnier
[3] Bisagra Superior
[3] Bisagra Superior

[4] Lower Hinge
[4] Articulation inférieure
[4] Unteres Scharnier
[4] Bisagra Inferior

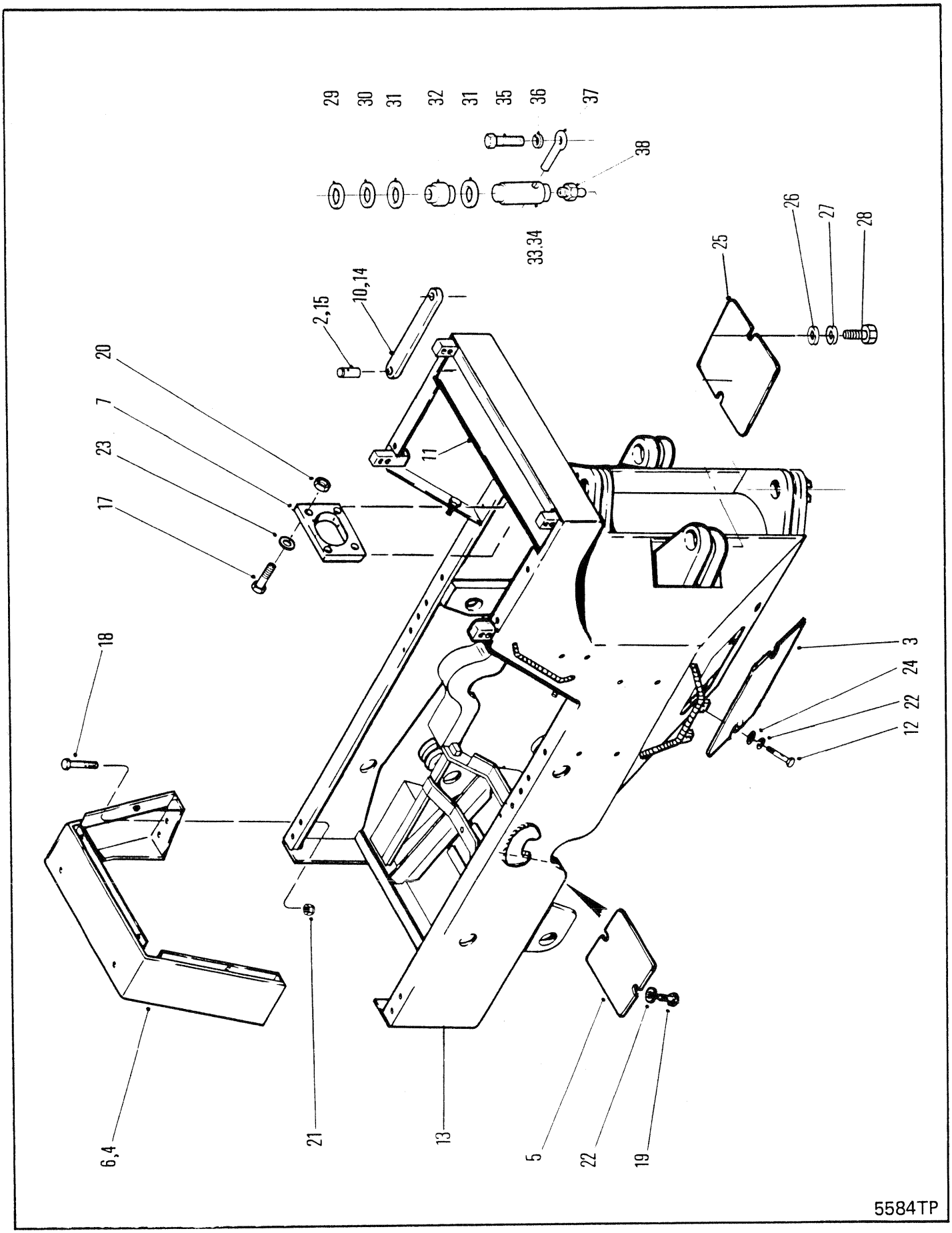
29
30
31
32
31
35
36
37
38
33,34
26
27
28
25
10,14
2,15
20
7
23
17
11
18
3
24
22
12
6,4
21
13
5
22
19
5584TP

# FRONT FRAME
# CHÂSSIS AVANT & ARRIÈRE
# RAHMEN, VORDER & HINTER
# CHASSI DIANTEIRO & TRASEIRO
# BASTIDOR DELANTERO & TRASERO

| No. | Part No. | Qty | Description | Description | Benennung | Descrição | Descripción |
|---|---|---|---|---|---|---|---|
| 1 | †658102 | 8 | Link | articulation | Gelenk | articulação | articulación |
| 2 | 1317072 | 2 | Faspin | faspin | Faspin | pino prend | horq |
| 3 | 1900963 | 2 | Cover | couvercle | Deckel | tampa | tapa |
| 4 | 1900990 | 1 | Shroud | enveloppe | Umkleidung | proteção | envolvente |
| 5 | 1901505 | 1 | Cover | couvercle | Deckel | tampa | tapa |
| 6 | [1]1903128 | 1 | Shroud | enveloppe | Umkleidung | proteção | envolvente |
| 7 | 1907510 | 1 | Guard | protecteur | Schutz | proteção | protector |
| 8 | †1908781 | 2 | Step | marche | Stufe | degrau | escalón |
| 9 | †1908929 | 4 | Chain | chane | Kette | corrente | cadena |
| 10 | [2]1914390 | 1 | Frame lock | serrure du chassis | Rahmenschlo- | trava do chassis | seguro de marco |
| 11 | 1914972 | 1 | Hold down assy | ass dinstallation | Halteeinheit | conj restritor | conj restringir |
| 12 | 17C001232 | 4 | Bolt | boulon | Bolzen | parafuso | bulón |
| 13 | --------- | 1 | Front frame | chassis avant | Vorderhmen | chassi dianteiro | bastidor delantero |
| 14 | [3]1916923 | 2 | Frame lock | serrure du chassis | Rahmenschlo- | trava do chassis | seguro de marco |
| 15 | †1923871 | 1 | Faspin | faspin | Faspin | pino prend | horq |
| 16 | [4]†1991050 | 2 | Rail kit | jeu de rails | Schienen Kit | jogo de trilhos | juego de rieles |
| 17 | 17C000836 | 4 | Bolt | boulon | Bolzen | parafuso | bulón |
| 18 | 17C001032 | 10 | Bolt | boulon | Bolzen | parafuso | bulón |
| 19 | 17C001228 | 2 | Bolt | boulon | Bolzen | parafuso | bulón |
| 20 | 17D000006 | 4 | Nut | écrou | Mutter | porca | tuerca |
| 21 | 17D000009 | 4 | Nut | écrou | Mutter | porca | tuerca |
| 22 | 24E000012 | 6 | Lockwasher | rondelle frein | Sicherungsscheibe | arruela de pressão | arandela seguridad |
| 23 | 25E000021 | 4 | Washer | rondelle | Scheibe | arruela | arandela |
| 24 | 25E000027 | 4 | Washer | rondelle | Scheibe | arruela | arandela |
| 25 | [5]1919766 | 1 | Cover | couvercle | Deckel | tampa | tapa |
| 26 | [5]24E000010 | 2 | Flatwasher | rondelle plate | Unterlegscheibe | arruela chata | arandela plana |
| 27 | [5]27E000010 | 2 | Lockwasher | rondelle frein | Sicherungsscheibe | arruela de pressão | arandela seguridad |
| 28 | [5]17C001032 | 2 | Bolt | boulon | Bolzen | parafuso | bulón |
| 29 | ‡1901079 | - | Shim | cale | Beilage | calço | planchita |
| 30 | ‡1900168 | - | Washer | rondelle | Scheibe | arruela | arandela |
| 31 | 1900167 | 4 | Washer | rondelle | Scheibe | arruela | arandela |
| 32 | 1574466 | 2 | Bushing | chemise | Buchse | bucha | buje |
| 33 | [6]1915205 | 1 | Pin | goupille | Stift | pino | pasador |
| 34 | [7]1915214 | 1 | Pin | goupille | Stift | pino | pasador |
| 35 | 1915786 | 2 | Bolt | boulon | Bolzen | parafuso | bulón |
| 36 | 24E000008 | 2 | Lockwasher | rondelle frein | Sicherungsscheibe | arruela de pressão | arandela seguridad |
| 37 | 586452 | 2 | Lockpin | goupille de blocage | Sperrstift | pino de trava | pasador de seguridad |
| 38 | 10H000035 | 2 | Fitting | ajustage | Verbindung | ajuste | accesorio |

[1] □666CUM

[2] □500E-461-CAC&➡, 513E-496-CAC&➡

[3] □515A-101-CAC&➡

[4] Ref RSG 47C

[5] □513G-2031-CAC&➡, 500G-1806-CAC&➡,515G-206-CAC&➡

[6] Upper Hinge
[6] Articulation supérieure
[6] Oberes Scharnier
[6] Bisagra Superior
[6] Bisagra Superior

[7] Lower Hinge
[7] Articulation inférieure
[7] Unteres Scharnier
[7] Bisagra Inferior
[7] Bisagra Inferior

666CUM 500E-101-CAC➡500G-9999-CAC
666GM 513E-101-CAC➡513G-9999-CAC
666GMGR 515A-101-CAC➡515A-9999-CAC

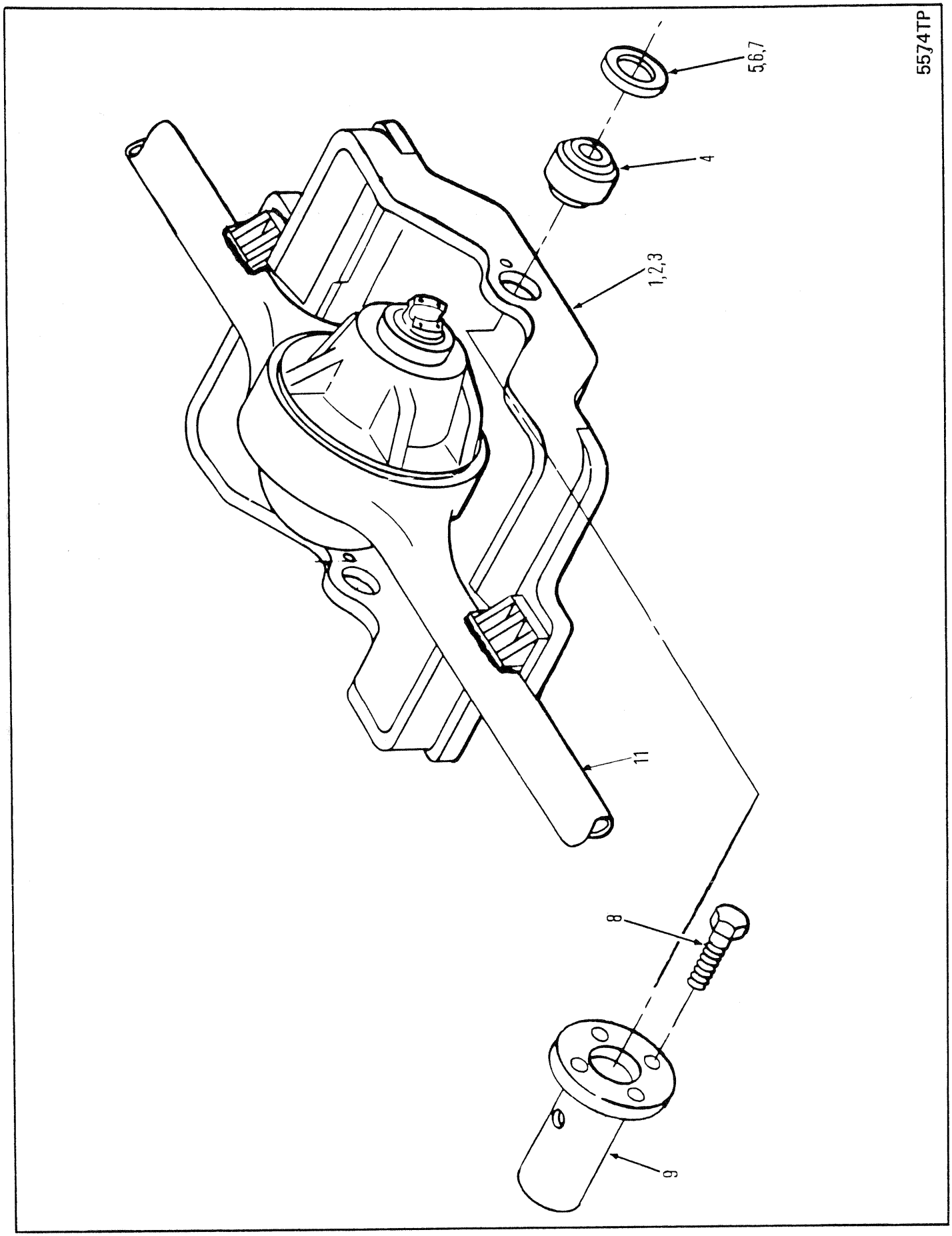
5574TP
5,6,7
4
1,2,3
11
8
9

# AXLE CRADLE ASSEMBLY
# ESSIEU, ENSEMBLE DE BERCEAU
# ACHSENLAGERUNG, VOLLSTÄNDIG
# EIXO, CONJUNTO DO BÊRÇO
# EJE, CONJUNTO DEL CABALLETE

| No. | Part No. | Qty | Description | Description | Benennung | Descrição | Descripción |
|---|---|---|---|---|---|---|---|
| 1 | **1907207** | 1 | Cradle assy | berceau ens | Wiegenanordnung | armação conj | soporte conj |
| 2 | [1]**1907288** | 1 | Cradle assy | berceau ens | Wiegenanordnung | armação conj | soporte conj |
| 3 | [2]**1920078** | 1 | Cradle assy | berceau ens | Wiegenanordnung | armação conj | soporte conj |
| 4 | **1574466** | 2 | Bushing | chemise | Buchse | bucha | buje |
| 5 | **1900167** | 2 | Washer | rondelle | Scheibe | arruela | arandela |
| 6 | ‡**1900168** | - | Washer | rondelle | Scheibe | arruela | arandela |
| 7 | ‡**1901079** | - | Shim | cale | Beilage | calço | planchita |
| 8 | **33C000824** | 8 | Bolt | boulon | Bolzen | parafuso | bulón |
| 9 | **1919897** | 2 | Pin | goupille | Stift | pino | pasador |
| 10 | [3]†**1991050** | 1 | Repair kit | trousse de reparation | Reparatursatz | conjunto de reparo | juego de reparación |
| 11 | ○--------- | - | Front axle | essieu avant | Vorderachse | eixo dianteiro | eje delantero |

[1] □17,600 Series Optional Wide-Track Axle
[1] □Essieu pour chenille large en option sur la série 17,600
[1] □Breitspurachse der 17,600 Serie - auf Wunsch
[1] □Série 17,600 de Eixo Optativo de Carril Largo
[1] □Series 17,600 de Eje Opcional de Banda Ancha

[2] □515A-101➡9999-CAC

[3] Ref RSG 47D

666CUM 500D-101-CAC➡500G-9999-CAC
666GM 513E-101-CAC➡513G-9999-CAC
666GMGR 515A-101-CAC➡515A-9999-CAC
526A-101-CAC➡526A-9999-CAC

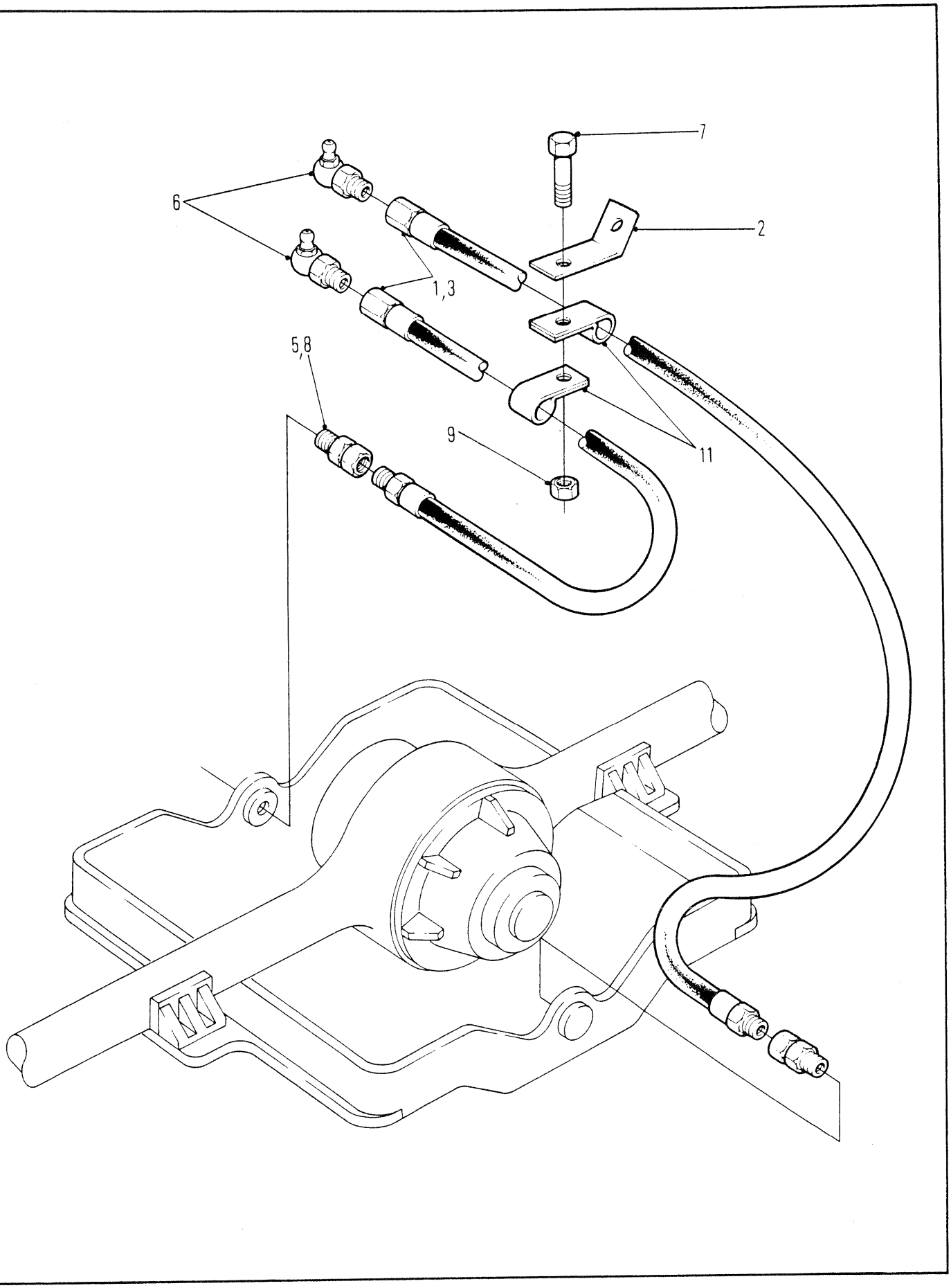
7
6
2
1,3
5,8
9
11

## CRADLE LUBRICATION
## LUBRIFICATION DU LIT
## ACHSGABEL-SCHMIERUNG
## LUBRIFICAÇÃO DO BERÇO
## LUBRIFICACION DE LA CUNA

| No. | Part No. | Qty | Description | Description | Benennung | Descrição | Descripción |
|---|---|---|---|---|---|---|---|
| 1 | [1]1903001 | 1 | Hose | tuyau flexible | Schlauch | mangueira | manguera |
| 2 | 1904293 | 1 | Bracket | support | Winkel | grampo | grampa |
| 3 | [2]1923075 | 1 | Hose | tuyau flexible | Schlauch | mangueira | manguera |
| 4 | †4E0000006 | 1 | Lockwasher | rondelle frein | Sicherungsscheibe | arruela de pressão | arandela seguridad |
| 5 | 5K0000108 | 2 | Fitting | ajustage | Verbindung | ajuste | accesorio |
| 6 | 12H000015 | 2 | Fitting | ajustage | Verbindung | ajuste | accesorio |
| 7 | 17C000616 | 1 | Bolt | boulon | Bolzen | parafuso | bulón |
| 8 | 32F000001 | 2 | Fitting | ajustage | Verbindung | ajuste | accesorio |
| 9 | 17D000003 | 1 | Nut | écrou | Mutter | porca | tuerca |
| 10 | †18C000612 | 1 | Bolt | boulon | Bolzen | parafuso | bulón |
| 11 | 30H000035 | 2 | Clip | attache | Schelle | braçadeira | abrazadera |

[1] Hose to Front Joint
[1] Tuyau souple au joint avant
[1] Schlauch zum vorderen Gelenk
[1] Mangueira à Junta da Frente
[1] Manguera para Unión Delantera

[2] Hose to Rear Joint
[2] Tuyau souple au joint arrière
[2] Schlauch zum hinteren Gelenk
[2] Mangueira à Junta de trás
[2] Manguera para Unión Trasera

| | |
|---|---|
| 666CUM | 500D-161-CAC→500D-9999-CAC |
| 666GM | 513E-101-CAC→513G-9999-CAC |
| 666GMGR | 515A-101-CAC→515A-9999-CAC |

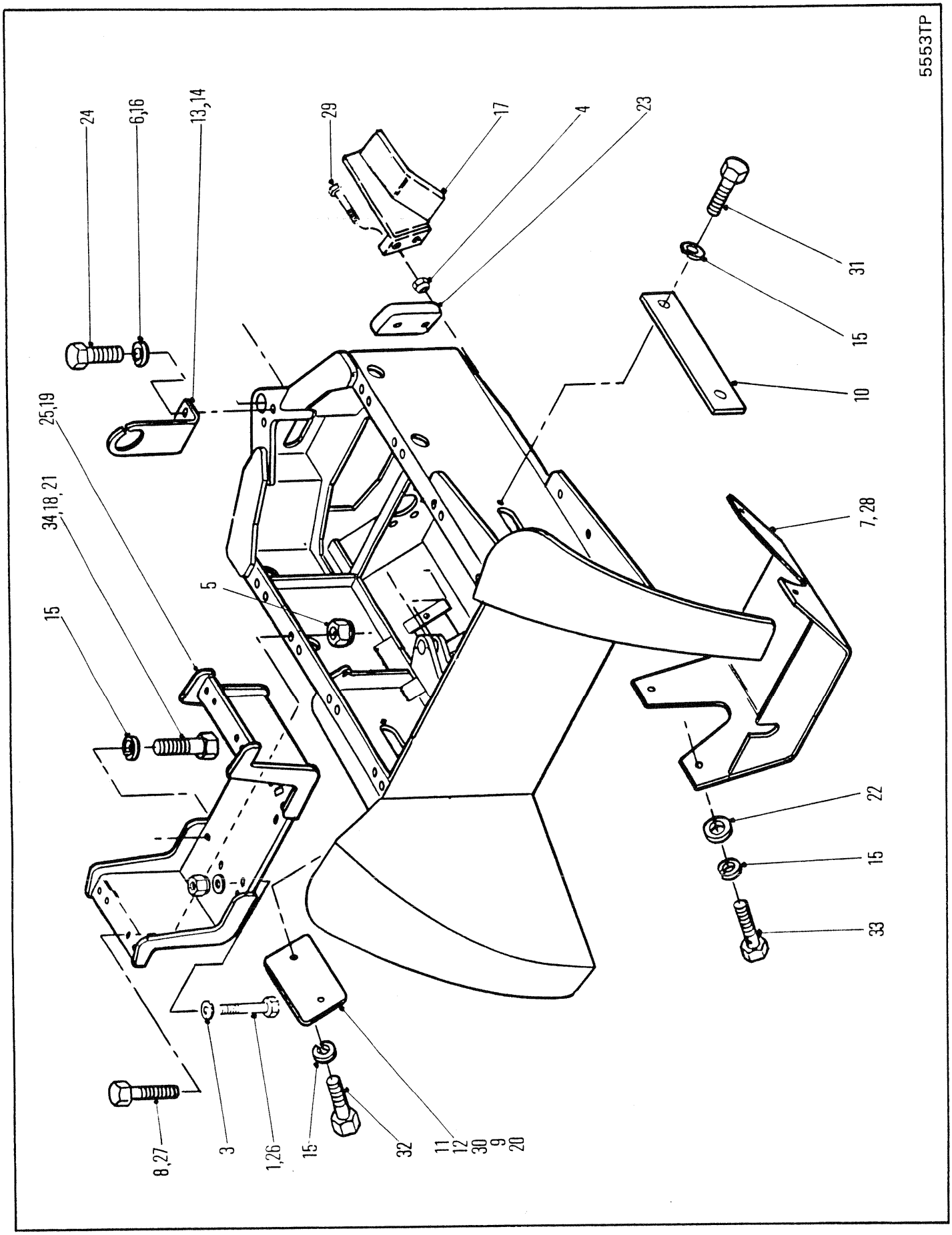
5553TP
24
6,16
13,14
29
17
4
23
31
15
10
25,19
34,18,21
15
5
7,28
22
15
33
8,27
3
1,26
15
32
11
12
30
9
20

# REAR FRAME & MOUNTING
# CHÂSSIS ARRIÈRE & MONTAGE
# HINTERRAHMEN UND MONTIERUNG
# ARMAÇÃO TRASEIRA E SUPORTE
# ARMAZON TRASERA Y SOPORTE

| No. | Part No. | Qty | Description | Description | Benennung | Descrição | Descripción |
|---|---|---|---|---|---|---|---|
| A | ---------- | 1 | Rear frame | châssis arrière | Hinterrahmen | chassis trasero | marco posterior |
| 1 | **17C002080** | 2 | Bolt | boulon | Bolzen | parafuso | bulón |
| 2 | †**1317072** | 2 | Faspin | faspin | Faspin | pino prend | horq |
| 3 | **1503564** | 4 | Washer | rondelle | Scheibe | arruela | arandela |
| 4 | **17D000006** | 2 | Nut | écrou | Mutter | porca | tuerca |
| 5 | **17D000010** | 8 | Nut | écrou | Mutter | porca | tuerca |
| 6 | **24E000006** | 2 | Lockwasher | rondelle frein | Sicherungsscheibe | arruela de pressão | arandela seguridad |
| 7 | [1]**1900923** | 1 | Axle pan | carter dessieu | Achsenwanne | panela do eixo | caldero del eje |
| 8 | **17C001240** | 8 | Bolt | boulon | Bolzen | parafuso | bulón |
| 9 | **24E000010** | 2 | Lockwasher | rondelle frein | Sicherungsscheibe | arruela de pressão | arandela seguridad |
| 10 | **1901466** | 2 | Cover | couvercle | Deckel | tampa | tapa |
| 11 | **1901505** | 2 | Cover | couvercle | Deckel | tampa | tapa |
| 12 | †**1901542** | 1 | Cover | couvercle | Deckel | tampa | tapa |
| 13 | [2]**1901981** | 1 | Bracket | support | Winkel | grampo | grampa |
| 14 | [3]**1903693** | 1 | Bracket | support | Winkel | grampo | grampa |
| 15 | **24E000012** | 18 | Lockwasher | rondelle frein | Sicherungsscheibe | arruela de pressão | arandela seguridad |
| 16 | **25E000017** | 2 | Flatwasher | rondelle plate | Unterlegscheibe | arruela chata | arandela plana |
| 17 | **1905685** | 1 | Bracket | support | Winkel | grampo | grampa |
| 18 | **17C001244** | 8 | Bolt | boulon | Bolzen | parafuso | bulón |
| 19 | [3]**1909414** | 1 | Winch mount | montura du treuil | Windenaufbau | montagem do guincho | montaje del guinche |
| 20 | †**25E000025** | 2 | Washer | rondelle | Scheibe | arruela | arandela |
| 21 | **17C002044** | 8 | Bolt | boulon | Bolzen | parafuso | bulón |
| 22 | **27E000012** | 4 | Washer | rondelle | Scheibe | arruela | arandela |
| 23 | O--------- | - | Steering stop | arrêt de direction | Lenkanschlag | batente da direção | direc-parada |
| 24 | **17C000620** | 2 | Bolt | boulon | Bolzen | parafuso | bulón |
| 25 | [2]**1917095** | 1 | Winch mount | montura du treuil | Windenaufbau | montagem do guincho | montaje del guinche |
| 26 | **17C002048** | 2 | Bolt | boulon | Bolzen | parafuso | bulón |
| 27 | **17C002056** | 2 | Bolt | boulon | Bolzen | parafuso | bulón |
| 28 | **1907645** | 1 | Axle pan | carter dessieu | Achsenwanne | panela do eixo | caldero del eje |
| 29 | **17C000824** | 7 | Bolt | boulon | Bolzen | parafuso | bulón |
| 30 | †**17C001024** | 2 | Bolt | boulon | Bolzen | parafuso | bulón |
| 31 | **17C001224** | 6 | Bolt | boulon | Bolzen | parafuso | bulón |
| 32 | **17C001228** | 2 | Bolt | boulon | Bolzen | parafuso | bulón |
| 33 | **17C001232** | 4 | Bolt | boulon | Bolzen | parafuso | bulón |
| 34 | **17C001236** | 6 | Bolt | boulon | Bolzen | parafuso | bulón |

[1] □664 & 666 with 17,600 series axle
[1] □664 & 666 cum essieux série 17,600
[1] □664 & 666 mit Achsen 17,600
[1] □664 & 666 com eixos série 17,600
[1] □664 & 666 con ejex serie 17,600

[2] Used with Gearmatic Winch
[2] Utilisé avec le treuil Gearmatic
[2] mit Gearmatic-Winde
[2] Usado com guincho Gearmatic
[2] Se usa con güinche Gearmatic

[3] Used with Clark Winch
[3] Utilisé avec le treuil Clark
[3] mit Clark-Winde
[3] Usado com guincho Clark
[3] Se usa con güinche Clark

666CUM 500D-101-CAC→500G-9999-CAC
666GM 513E-101-CAC→513G-9999-CAC

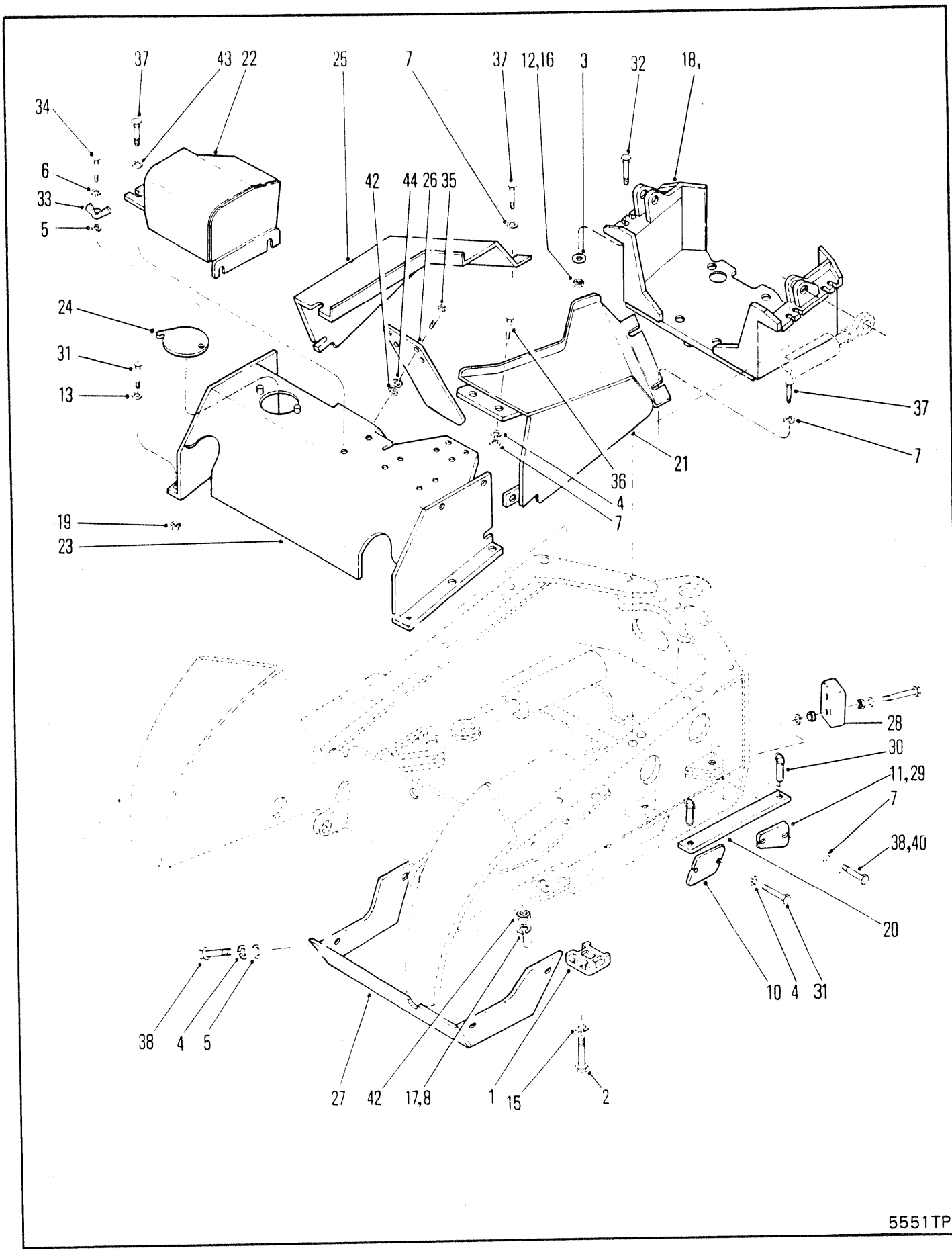
37
43
22
25
7
37
12,16
3
32
18,
34
6
33
5
42
44
26
35
24
31
13
37
7
36
4
7
21
19
23
28
30
11,29
7
38,40
20
10
4
31
38
4
5
27
42
17,8
1
15
2
5551TP

# REAR FRAME & MOUNTING
# CHÂSSIS ARRIÈRE & MONTAGE
# HINTERRAHMEN UND MONTIERUNG
# ARMAÇÃO TRASEIRA E SUPORTE
# ARMAZON TRASERA Y SOPORTE

| No. | Part No. | Qty | Description | Description | Benennung | Descrição | Descripción |
|---|---|---|---|---|---|---|---|
| 1 | **115971** | 2 | Axle pad | essieu support | Achsplatte | calçp do eixo | apoyo del eje |
| 2 | **18C014128** | 8 | Bolt | boulon | Bolzen | parafuso | bulón |
| 3 | **713870** | 16 | Thrust washer | rondelle pouss | Ritzeldruck | arruela empuxo | arandela empuje |
| 4 | **24E000012** | 8 | Lockwasher | rondelle frein | Sicherungsscheibe | arruela de pressão | arandela seguridad |
| 5 | **25E000017** | 6 | Flatwasher | rondelle plate | Unterlegscheibe | arruela chata | arandela plana |
| 6 | **27E000006** | 1 | Lockwasher | rondelle frein | Sicherungsscheibe | arruela de pressão | arandela seguridad |
| 7 | **27E000010** | 15 | Flatwasher | rondelle plate | Unterlegscheibe | arruela chata | arandela plana |
| 8 | **1900338** | 4 | Washer | rondelle | Scheibe | arruela | arandela |
| 9 | ‡†**1901079** | - | Shim | cale | Beilage | calço | planchita |
| 10 | **1901505** | 2 | Plate | plaque | Platte | placa | placa |
| 11 | **1901542** | 1 | Cover | couvercle | Deckel | tampa | tapa |
| 12 | **60D000016** | 8 | Nut | écrou | Mutter | porca | tuerca |
| 13 | **27E000012** | 12 | Flatwasher | rondelle plate | Unterlegscheibe | arruela chata | arandela plana |
| 14 | ‡†**1905398** | - | Washer | rondelle | Scheibe | arruela | arandela |
| 15 | **1534237** | 8 | Washer | rondelle | Scheibe | arruela | arandela |
| 16 | **59D000006** | 8 | Nut | écrou | Mutter | porca | tuerca |
| 17 | **1907578** | 4 | Washer | rondelle | Scheibe | arruela | arandela |
| 18 | **1913891** | 1 | Winch mount | montura du treuil | Windenaufbau | montagem do guincho | montaje del guinche |
| 19 | **59D000012** | 6 | Nut | écrou | Mutter | porca | tuerca |
| 20 | --------- | - | Frame lock | serrure du chassis | Rahmenschlo- | trava do chassis | seguro de marco |
| 21 | **1915375** | 1 | Cover RH | couvercle D | Deckel R | tampa LD | cubierta LD |
| 22 | **1915382** | 1 | Cover | couvercle | Deckel | tampa | tapa |
| 23 | **1915423** | 1 | Cover | couvercle | Deckel | tampa | tapa |
| 24 | **1915428** | 1 | Cover | couvercle | Deckel | tampa | tapa |
| 25 | **1915462** | 1 | Cover LH | couvercle G | Deckel R | capa LE | cubierta LI |
| 26 | **1915482** | 1 | Plate | plaque | Platte | placa | placa |
| 27 | **1915526** | 1 | Axle pan | carter dessieu | Achsenwanne | panela do eixo | caldero del eje |
| 28 | ○------- | 1 | Steering Stop | arrêt de direction | Lenkanschlag | batente da direçã0 | direc-parada |
| 29 | **1930498** | 1 | Cover | couvercle | Deckel | tampa | tapa |
| 30 | --------- | - | Lockpin | goupille de blocage | Sperrstift | pino de trava | pasador de seguridad |
| 31 | **17C001228** | 4 | Bolt | boulon | Bolzen | parafuso | bulón |
| 32 | **18C001272** | 8 | Bolt | boulon | Bolzen | parafuso | bulón |
| 33 | **16D000006** | 1 | Wing nut | écrou papillon | Flügelmutter | porca barboleta | tuerca mariposa |
| 34 | **17C000620** | 1 | Bolt | boulon | Bolzen | parafuso | bulón |
| 35 | **17C000816** | 4 | Bolt | boulon | Bolzen | parafuso | bulón |
| 36 | **17C000820** | 2 | Bolt | boulon | Bolzen | parafuso | bulón |
| 37 | **17C001016** | 13 | Bolt | boulon | Bolzen | parafuso | bulón |
| 38 | **17C001024** | 2 | Bolt | boulon | Bolzen | parafuso | bulón |
| 39 | **17C001028** | 4 | Bolt | boulon | Bolzen | parafuso | bulón |
| 40 | **17C001032** | 2 | Bolt | boulon | Bolzen | parafuso | bulón |
| 41 | **17C001040** | 4 | Bolt | boulon | Bolzen | parafuso | bulón |
| 42 | **18D000014** | 8 | Nut | écrou | Mutter | porca | tuerca |
| 43 | **24E000006** | 1 | Lockwasher | rondelle frein | Sicherungsscheibe | arruela de pressão | arandela seguridad |
| 44 | **24E000008** | 8 | Lockwasher | rondelle frein | Sicherungsscheibe | arruela de pressão | arandela seguridad |

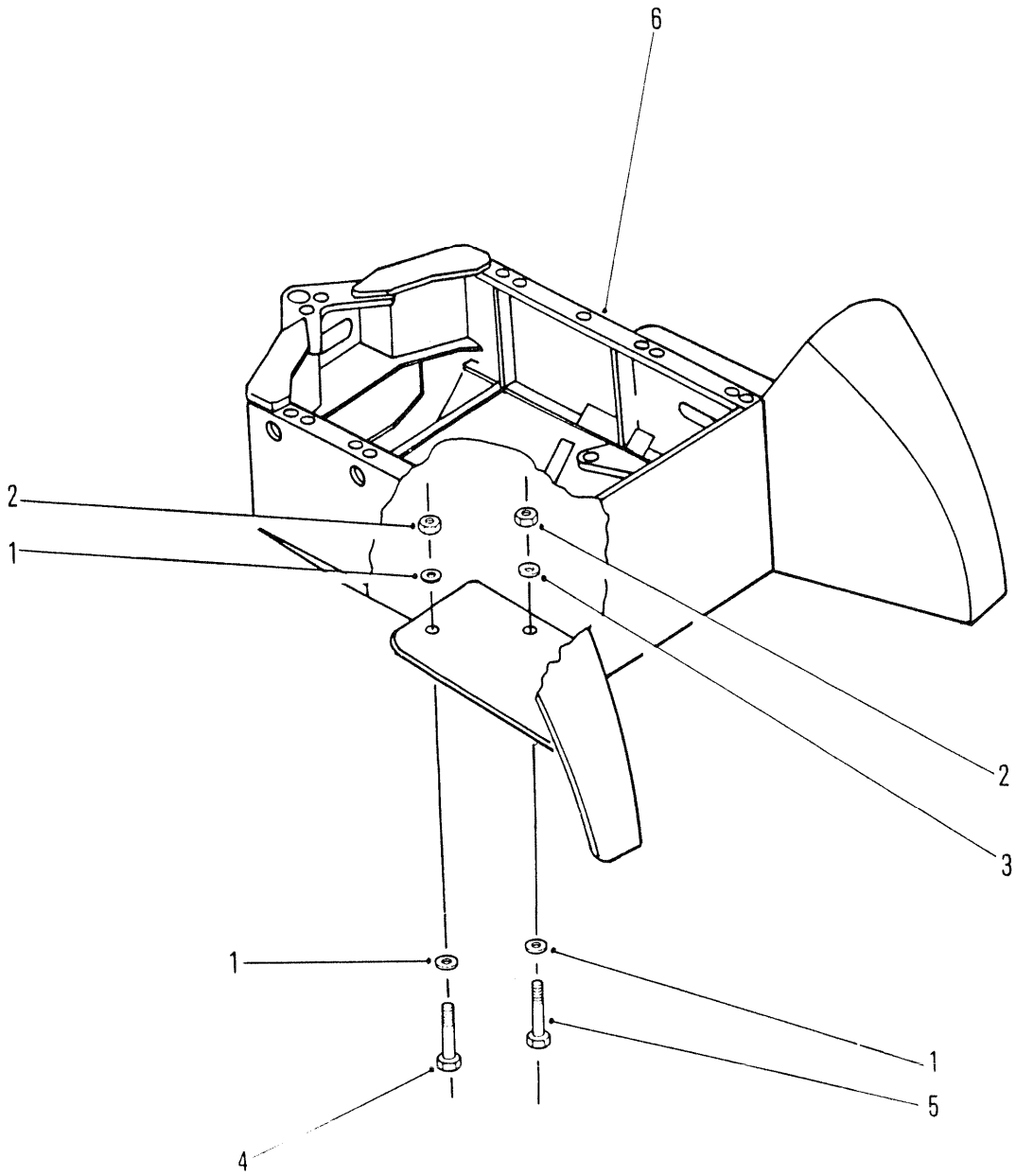


5535TP

# REAR AXLE MOUNTING
# MONTAGE DE L'ESSIEU ARRIÈRE
# HINTERACHSEN, MONTAGE
# SUPORTE DO EIXO TRASEIRO
# SOPORTE DEL EJE TRASERO

| No. | Part No. | Qty | Description | Description | Benennung | Descrição | Descripción |
|---|---|---|---|---|---|---|---|
| 1 | **1900671** | 16 | Washer outer | rondelle extérieure | Dichtung ausien | arruela exterior | arandela exterior |
| 2 | **60D000012** | 8 | Nut | écrou | Mutter | porca | tuerca |
| 3 | **1907578** | 8 | Washer inner | rondelle intérieure | Dichtung innen | arruela interior | arandela interior |
| 4 | **18C001256** | 4 | Bolt | boulon | Bolzen | parafuso | bulón |
| 5 | **18C001264** | 4 | Bolt | boulon | Bolzen | parafuso | bulón |
| 6 | O--------- | - | Rear frame | châssis arrière | Hinterrahmen | chassis trasero | marco posterior |

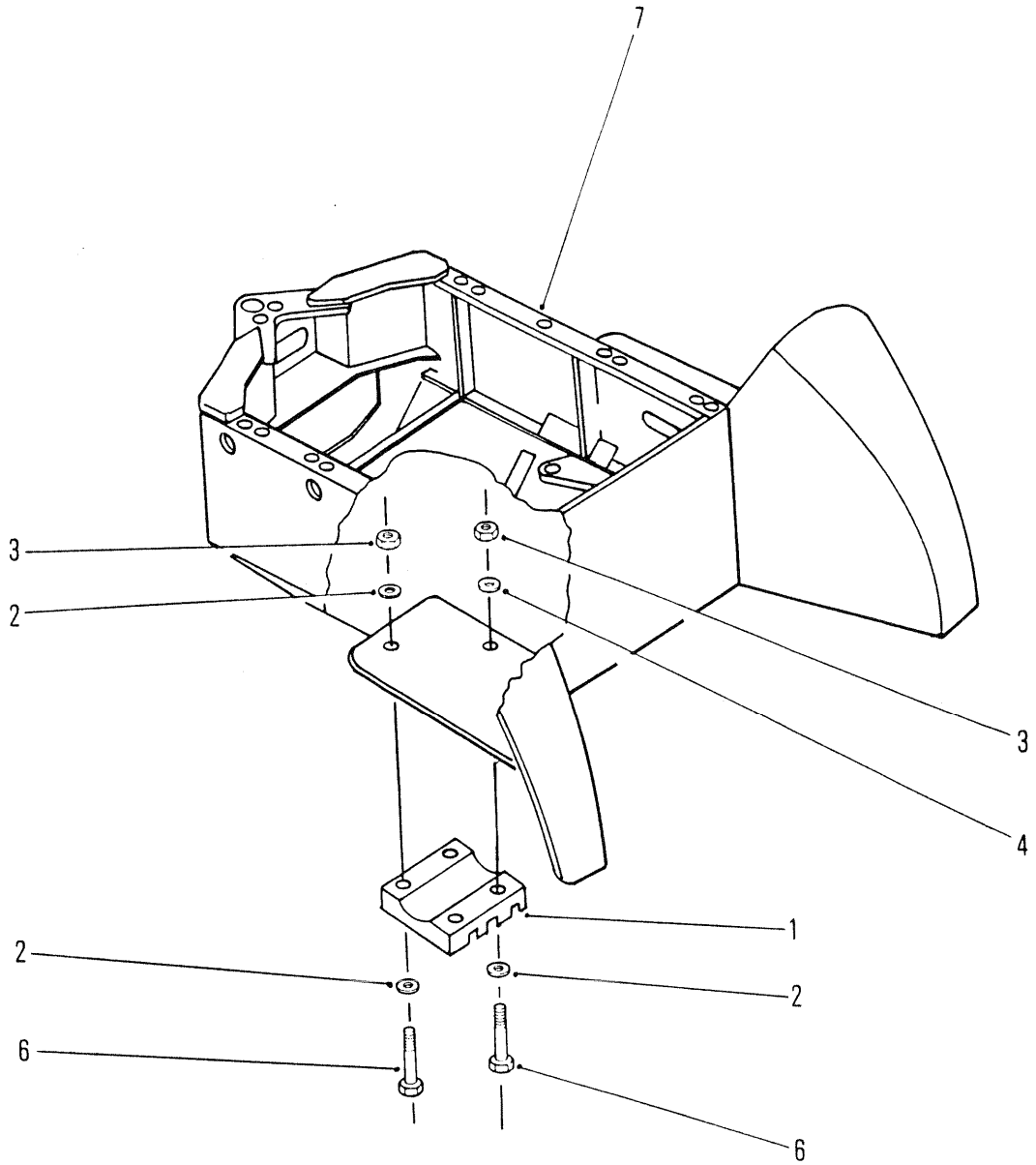


5534TP

# REAR AXLE MOUNTING
# MONTAGE DE L'ESSIEU ARRIÈRE
# HINTERACHSEN-MONTAGE
# SUPORTE DO EIXO TRASEIRO
# SOPORTE DEL EJE TRASERO

| No. | Part No. | Qty | Description | Description | Benennung | Descrição | Descripción |
|---|---|---|---|---|---|---|---|
| 1 | **115890** | 2 | Axle pad | essieu support | Achsplatte | calçp do eixo | apoyo del eje |
| 2 | **1900671** | 16 | Washer outer | rondelle extérieure | Dichtung ausien | arruela exterior | arandela exterior |
| 3 | **60D000012** | 8 | Nut | écrou | Mutter | porca | tuerca |
| 4 | **1907578** | 8 | Washer inner | rondelle intérieure | Dichtung innen | arruela interior | arandela interior |
| 5 | **18C012120** | 4 | Bolt | boulon | Bolzen | parafuso | bulón |
| 6 | **18C012136** | 4 | Bolt | boulon | Bolzen | parafuso | bulón |
| 7 | O--------- | - | Rear frame | châssis arrière | Hinterrahmen | chassis trasero | marco posterior |

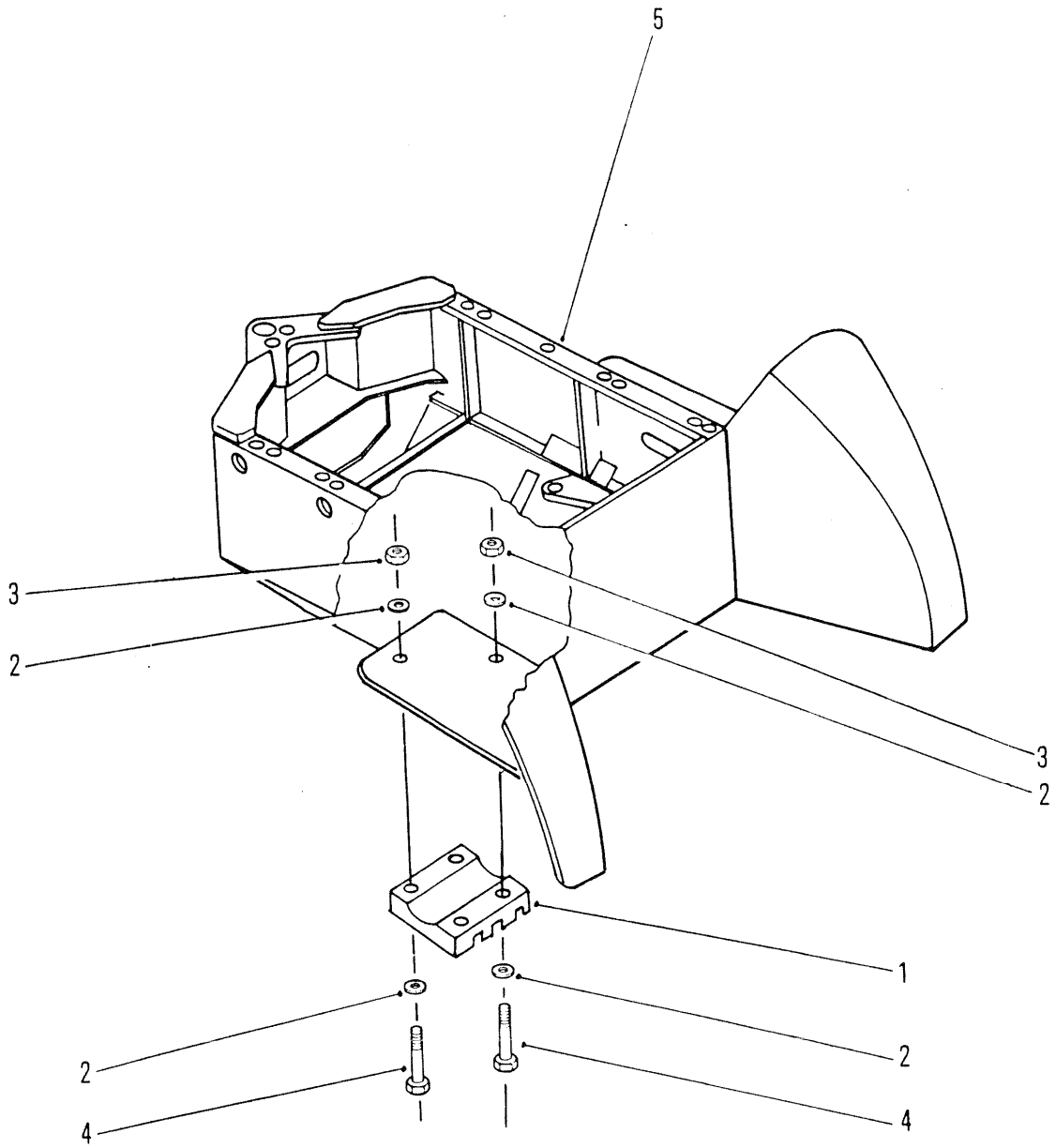


5533TP

# REAR AXLE MOUNTING
# MONTAGE DE L'ESSIEU ARRIÈRE
# HINTERACHSEN-MONTAGE
# SUPORTE DO EIXO TRASEIRO
# SOPORTE DEL EJE TRASERO

| No. | Part No. | Qty | Description | Description | Benennung | Descrição | Descripción |
|---|---|---|---|---|---|---|---|
| 1 | **115890** | 2 | Axle pad | essieu support | Achsplatte | calço do eixo | apoyo del eje |
| 2 | **1900671** | 16 | Washer | rondelle | Scheibe | arruela | arandela |
| 3 | **60D000012** | 8 | Nut | écrou | Mutter | porca | tuerca |
| 4 | **18C012120** | 8 | Bolt | boulon | Bolzen | parafuso | bulón |
| 5 | O--------- | - | Rear frame | châssis arrière | Hinterrahmen | chassis trasero | marco posterior |

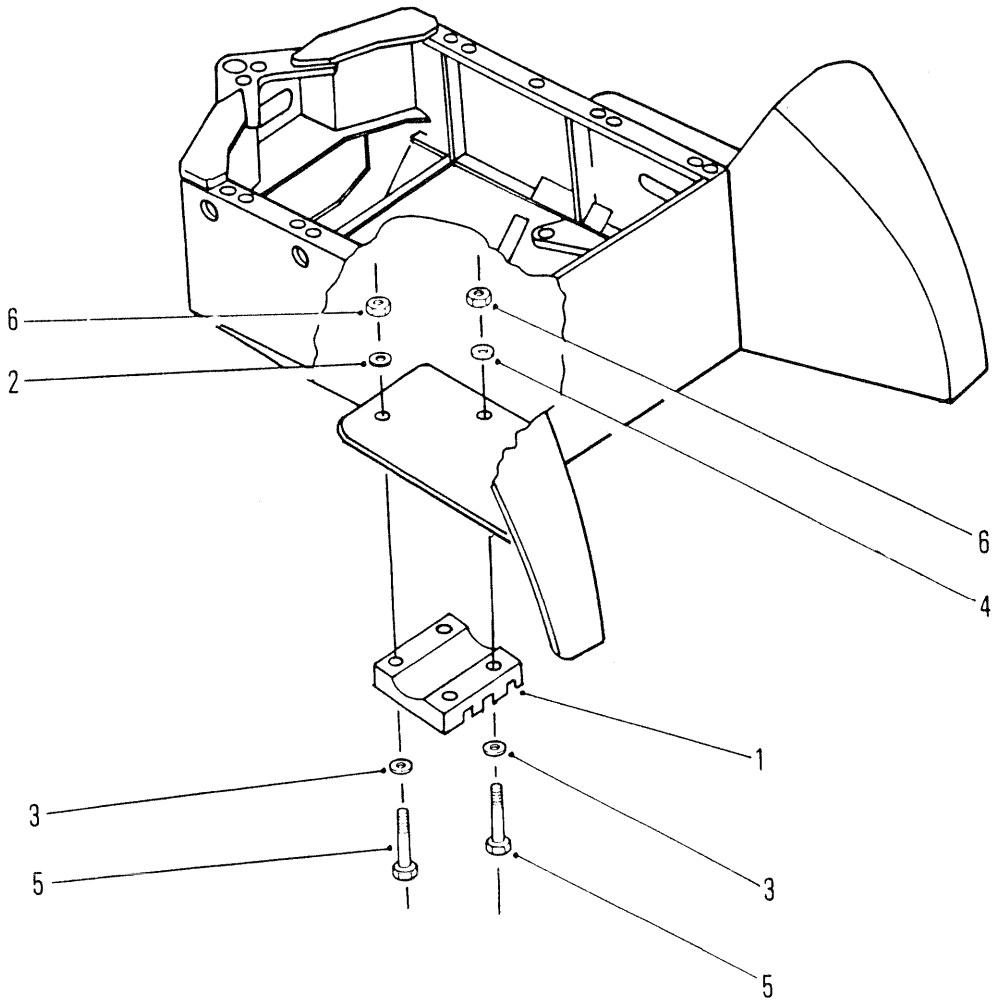


5532TP

# REAR AXLE MOUNTING
# MONTAGE DE L'ESSIEU ARRIÈRE
# HINTERACHSEN-MONTAGE
# SUPORTE DO EIXO TRASEIRO
# SOPORTE DEL EJE TRASERO

| No. | Part No. | Qty | Description | Description | Benennung | Descrição | Descripción |
|---|---|---|---|---|---|---|---|
| 1 | **115971** | 2 | Axle pad | essieu support | Achsplatte | calço do eixo | apoyo del eje |
| 2 | **1900338** | 4 | Washer | rondelle | Scheibe | arruela | arandela |
| 3 | **27E000016** | 12 | Washer | rondelle | Scheibe | arruela | arandela |
| 4 | **1907578** | 8 | Washer | rondelle | Scheibe | arruela | arandela |
| 5 | **18C014128** | 8 | Bolt | boulon | Bolzen | parafuso | bulón |
| 6 | **60D000014** | 8 | Nut | écrou | Mutter | porca | tuerca |

666CUM 500D-1232-CAC→500G-9999-CAC
666GM 513E-101-CAC→513F-9999-CAC
666GMGR 515A-101-CAC→515A-630-CAC

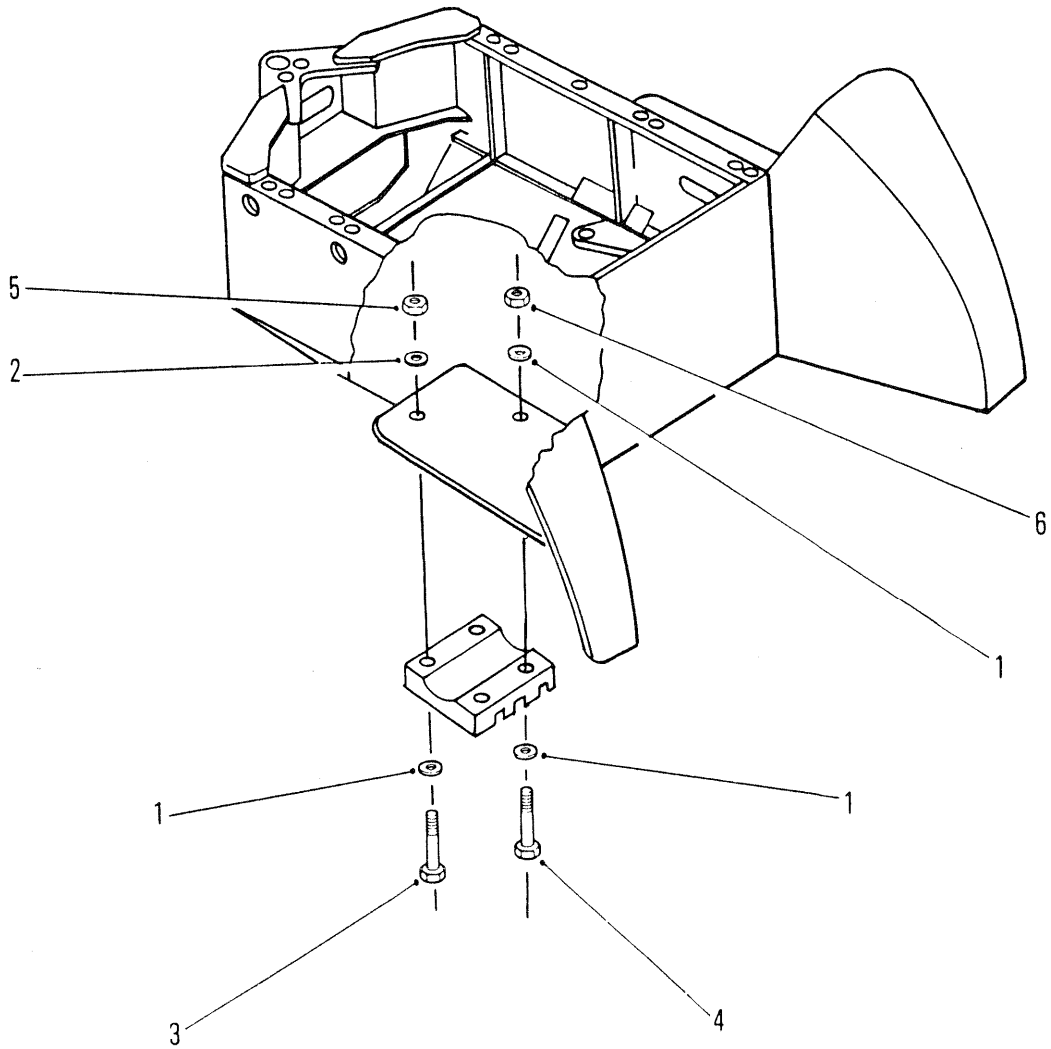


5531TP

# REAR AXLE MOUNTING
# MONTAGE DE L'ESSIEU ARRIÈRE
# HINTERACHSEN-MONTAGE
# SUPORTE DO EIXO TRASEIRO
# SOPORTE DEL EJE TRASERO

| No. | Part No. | Qty | Description | Description | Benennung | Descrição | Descripción |
|---|---|---|---|---|---|---|---|
| 1 | **27E000016** | 12 | Washer | rondelle | Scheibe | arruela | arandela |
| 2 | **1907578** | 8 | Washer | rondelle | Scheibe | arruela | arandela |
| 3 | **18C014144** | 4 | Bolt | boulon | Bolzen | parafuso | bulón |
| 4 | **18C016168** | 4 | Bolt | boulon | Bolzen | parafuso | bulón |
| 5 | **18D000014** | 8 | Nut | écrou | Mutter | porca | tuerca |
| 6 | **68D000016** | 4 | Nut | écrou | Mutter | porca | tuerca |

666CUM 500D-101-CAC➡500D-1231-CAC
666GMGR 515A-631-CAC➡515A-9999-CAC

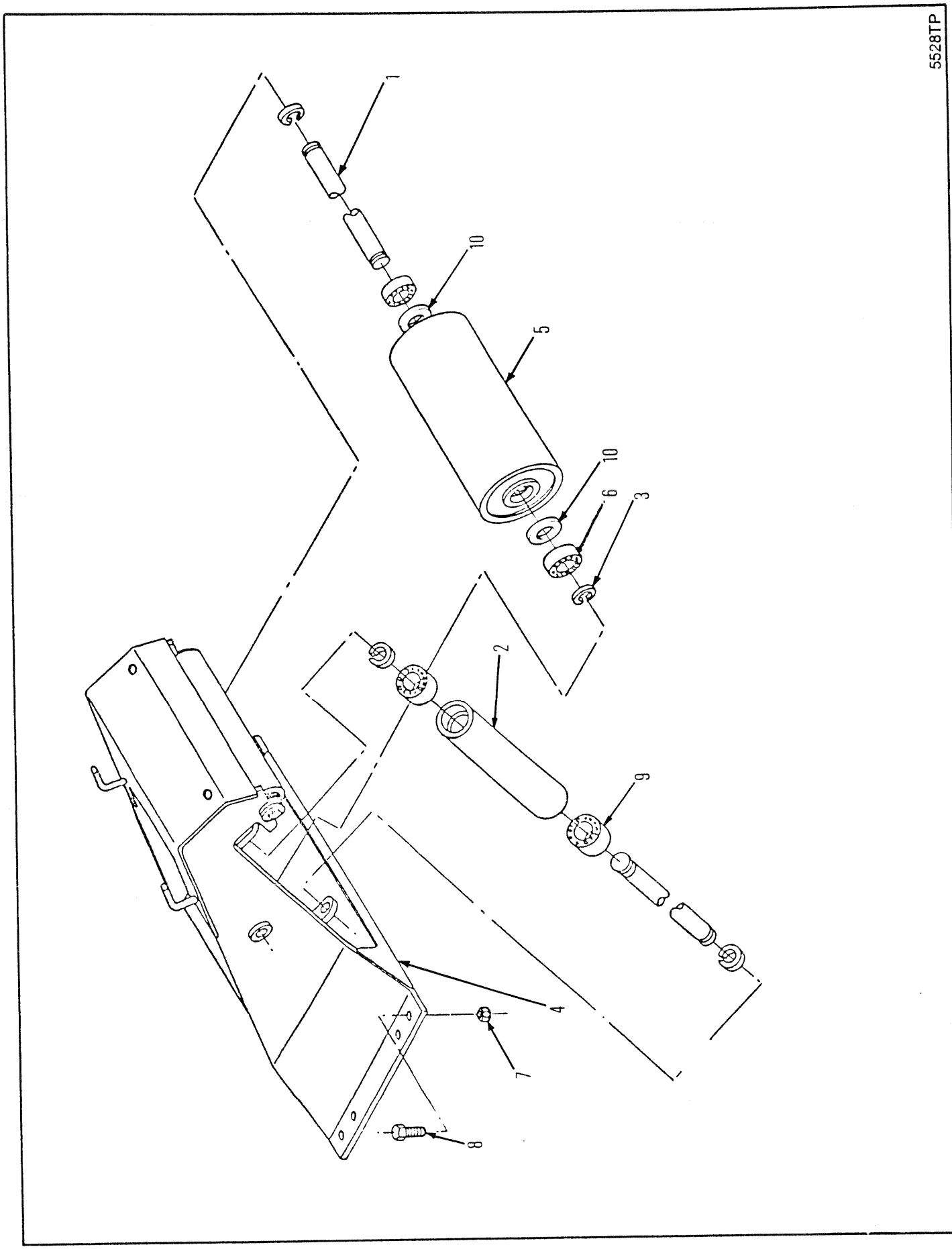
5528TP
1
10
5
10
6
3
2
9
4
7
8

# FAIRLEAD & MOUNTING
# GUIDE - CÂBLE ET MONTAGE
# FÜHRUNGSROLLE UND MONTAGE
# RODA - GUIA E MONTAGEM
# POLEA - GUIA Y MONTURA

| No. | Part No. | Qty | Description | Description | Benennung | Descrição | Descripción |
|---|---|---|---|---|---|---|---|
| 1 | **1900194** | 4 | Shaft | arbre | Welle | ávore | árbol |
| 2 | **1901550** | 3 | Roller | galet | Rolle | rolete | rodillo |
| 3 | **1902877** | 8 | Snap ring | circlips | Sperring | anel de trava | anillo de retención |
| 4 | **1903465** | 1 | Fairlead assy | ass du guide câble | Führungseinheit | cj cond cabo | conj pol guía |
| 5 | **1937131** | 1 | Roller | galet | Rolle | rolete | rodillo |
| 6 | [1]**1937132** | 2 | Bearing | palier | Lager | mancal | cojinete |
| 7 | **59D000012** | 8 | Nut | écrou | Mutter | porca | tuerca |
| 8 | **17C001252** | 8 | Bolt | boulon | Bolzen | parafuso | bulón |
| 9 | **1935453** | 6 | Bearing | palier | Lager | mancal | cojinete |
| 10 | [2]**1937129** | 2 | Spacer | entretoise | Distanzteil | espaçador | espaciador |

[1] Open side of bearings should be together when assembled
[1] Les côtés ouverts des paliers doivent ëtre ensemble lors du montage
[1] Offene Lagerseite muss bei Zusammenbau zusammen sein
[1] Os lados abertos dos mancais devern estar juntos quando forem montados
[1] Partes abiertas de los cojinetes deben estar juntas cuando estan armados

[2] Ref RSG 331 Spacer is not required when servicing 1937131 roller.

666CUM 500D-101-CAC➡500G-9999-CAC
666GM 513E-101-CAC➡513F-9999-CAC
666GMGR 515A-101-CAC➡515A-9999-CAC

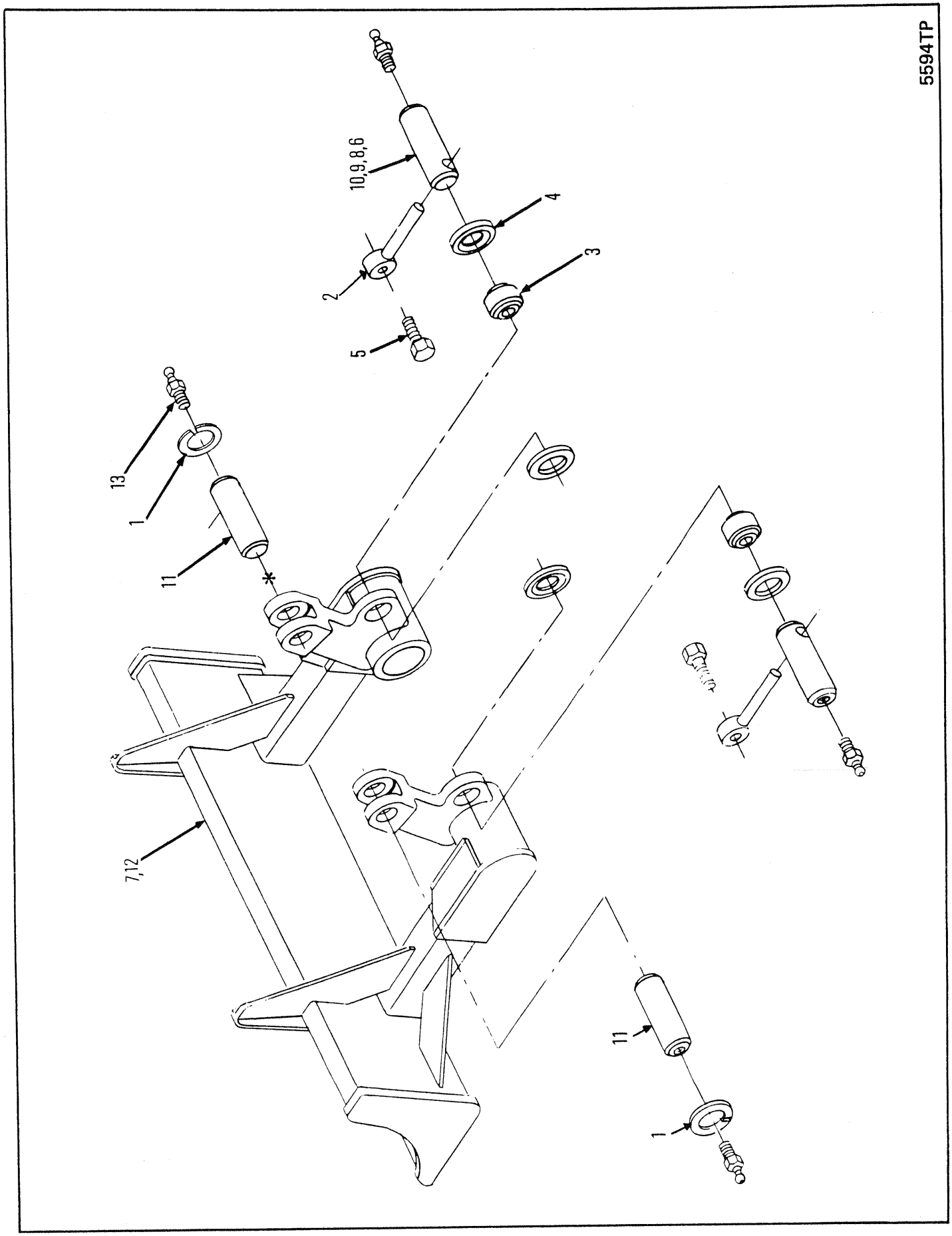
5594TP
10,9,8,6
4
3
2
5
13
1
11
*
7,12
11
1

# BLADE & MOUNTING
# PALE & MONTAGE
# SCHAUFEL UND SCHAUFELMONTAGE
# LÄMINA E SUPORTE
# LAMINA Y SOPORTE

| No. | Part No. | Qty | Description | Description | Benennung | Descrição | Descripción |
|---|---|---|---|---|---|---|---|
| 1 | **224106** | 4 | Snap ring | circlips | Sperring | anel de trava | anillo de retención |
| 2 | **586452** | 4 | Lockpin | goupille de blocage | Sperrstift | pino de trava | pasador de seguridad |
| 3 | **1574466** | 2 | Bushing | chemise | Buchse | bucha | buje |
| 4 | **1900168** | 2 | Washer | rondelle | Scheibe | arruela | arandela |
| 5 | **33C000824** | 6 | Bolt | boulon | Bolzen | parafuso | bulón |
| 6 | ‡**1901079** | - | Washer | rondelle | Scheibe | arruela | arandela |
| 7 | [1]**1923960** | 2 | Plate | plaque | Platte | placa | placa |
| 8 | ‡**1905398** | - | Washer | rondelle | Scheibe | arruela | arandela |
| 9 | ‡**1905399** | 4 | Washer | rondelle | Scheibe | arruela | arandela |
| 10 | **1915205** | 4 | Pin | goupille | Stift | pino | pasador |
| 11 | **1915222** | 2 | Pin | goupille | Stift | pino | pasador |
| 12 | **1919071** | 1 | Blade | lame | Schild | lâmina | cuchilla |
| 13 | **10H000025** | 6 | Grease fitting | graisseur | Nippel Schmier | graxeira | grasera |

[1] Ref RSG 189

666CUM 500D-101-CAC→500G-9999-CAC
666GM 513E-101-CAC→513F-9999-CAC
666GMGR 515A-101-CAC→515A-9999-CAC

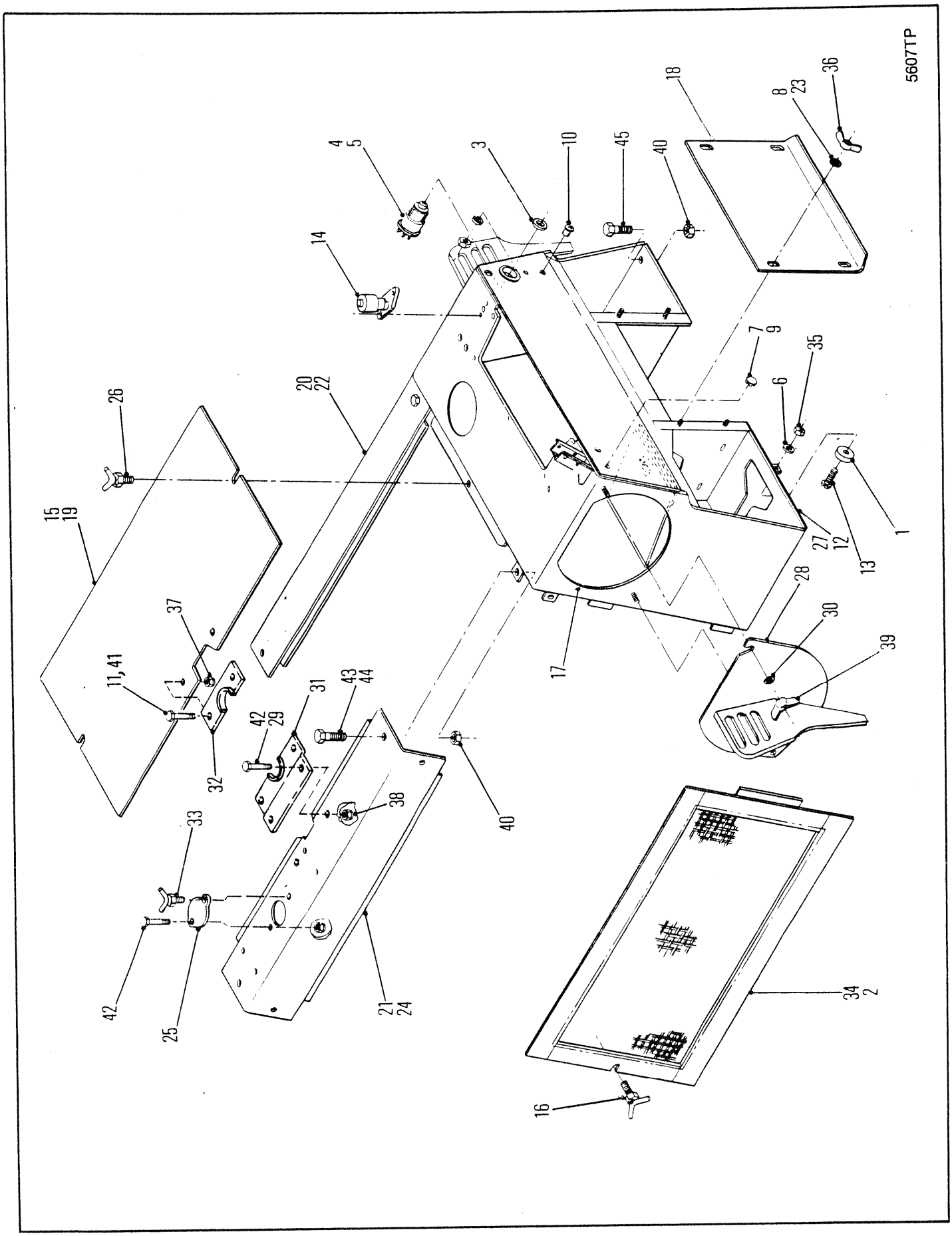
5607TP
1
2
3
4
5
6
7
8
9
10
11, 41
12
13
14
15
16
17
18
19
20
21
22
23
24
25
26
27
28
29
30
31
32
33
34
35
36
37
38
39
40
42
43
44
45

# FIREWALL ASSEMBLY
# CLOISON PARE-FEU
# BRANDWAND-AUFBAU
# CONJUNTO DO PÁRA-FOGO
# CONJUNTO DEL CONTRAFUEGOS

| No. | Part No. | Qty | Description | Description | Benennung | Descrição | Descripción |
|---|---|---|---|---|---|---|---|
| 1 | 302568 | 1 | Bumper | butoir | Stossfnger | batente | tope |
| 2 | 1901712 | 2 | Panel | panneau | Tafel | painel | panel |
| 3 | 547237 | 1 | Disc | disque | Scheibe | disco | disco |
| 4 | 573548 | 1 | Switch | interrupteur | Schalter | interruptor | interruptor |
| 5 | 600259 | 1 | Button | bouton | Knopf | botão | botón |
| 6 | 616775 | 1 | Washer | rondelle | Scheibe | arruela | arandela |
| 7 | 661862 | 1 | Button | bouton | Knopf | botão | botón |
| 8 | 664423 | 4 | Washer | rondelle | Scheibe | arruela | arandela |
| 9 | 696073 | 2 | Button | bouton | Knopf | botão | botón |
| 10 | 743200 | 1 | Button | bouton | Knopf | botão | botón |
| 11 | 25E000016 | 2 | Washer | rondelle | Scheibe | arruela | arandela |
| 12 | [2]1917187 | 1 | Firewall | pare-feu | Brandschollern | parede refrat | pared cotrfg |
| 13 | 86G001010 | 1 | Screw | vis | Schraube | parafuso | tornillo |
| 14 | 1529625 | 1 | Indicator | indicateur | Messer | indicador | indicador |
| 15 | [3]1901098 | 1 | Top panel assy | ass du pann sup | Deckplatteneinheit | cj painel superior | conj panel sup |
| 16 | 1901362 | 2 | Bolt | boulon | Bolzen | parafuso | bulón |
| 17 | 1902031 | 1 | Cover panel | panneau de couvercle | Deckplatte | painel de cobertura | panel de cubierta |
| 18 | 1902037 | 1 | Panel | panneau | Tafel | painel | panel |
| 19 | [1]1902197 | 1 | Top panel assy | ass du pann sup | Deckplatteneinheit | cj painel superior | conj panel sup |
| 20 | [3]1904644 | 1 | Rail assy RH | assemblage du rail D | Schieneneinheit R | conj do trilho LD | conjunto rielLD |
| 21 | [3]1904645 | 1 | Rail assy LH | assemblage du rail G | Schieneneinheit L | conj do trilho LE | conjunto riel LI |
| 22 | [1]1904686 | 1 | Rail assy RH | assemblage du rail D | Schieneneinheit R | conj do trilho LD | conjunto rielLD |
| 23 | †25E000017 | 4 | Washer | rondelle | Scheibe | arruela | arandela |
| 24 | [1]1908943 | 1 | Rail assy LH | assemblage du rail G | Schieneneinheit L | conj do trilho LE | conjunto riel LI |
| 25 | 1909215 | 1 | Cover | couvercle | Deckel | tampa | tapa |
| 26 | [4]1909557 | 2 | Bolt | boulon | Bolzen | parafuso | bulón |
| 27 | [5]1909627 | 1 | Firewall assy | ass du pare-feu | Brandschotteinheit | cj parede refrat | conj pared cotrfg |
| 28 | 1914237 | 1 | Cover | couvercle | Deckel | tampa | tapa |
| 29 | 25E000018 | 1 | Washer | rondelle | Scheibe | arruela | arandela |
| 30 | 25E000021 | 2 | Flatwasher | rondelle plate | Unterlegscheibe | arruela chata | arandela plana |
| 31 | 1915243 | 1 | Cover | couvercle | Deckel | tampa | tapa |
| 32 | 1915245 | 1 | Cover | couvercle | Deckel | tampa | tapa |
| 33 | 1915267 | 1 | Thumbscrew | vis à oreilles | Daumenschraube | parafuso de orelha | tornillo de mano |
| 34 | [4]1922815 | 2 | Side panel | panneau latéral | Seitenblech | painel lateral | panel lateral |
| 35 | 14D000010 | 1 | Nut | écrou | Mutter | porca | tuerca |
| 36 | 16D000006 | 5 | Nut | écrou | Mutter | porca | tuerca |
| 37 | 17D000001 | 2 | Nut | écrou | Mutter | porca | tuerca |
| 38 | 17D000003 | 2 | Nut | écrou | Mutter | porca | tuerca |
| 39 | 17D000006 | 2 | Nut | écrou | Mutter | porca | tuerca |
| 40 | 17D000009 | 4 | Nut | écrou | Mutter | porca | tuerca |
| 41 | 17C000416 | 2 | Bolt | boulon | Bolzen | parafuso | bulón |
| 42 | 17C000620 | 2 | Bolt | boulon | Bolzen | parafuso | bulón |
| 43 | 17C001020 | 8 | Bolt | boulon | Bolzen | parafuso | bulón |
| 44 | 65D000010 | 8 | Nut | écrou | Mutter | porca | tuerca |
| 45 | 17C001028 | 4 | Bolt | boulon | Bolzen | parafuso | bulón |

[1] 666CUM

[2] □513F-101-CAC&➡, 500F-101-CAC&➡, 515A-101➡205-CAC

[3] 666GM

[4] 666GMGR

[5] □513E-101-CAC&➡, 500E-101➡9999-CAC

| | |
|---|---|
| 666CUM | 500E-101-CAC➡500G-1805-CAC |
| 666GM | 513E-101-CAC➡513G-2030-CAC |
| 666GMGR | 515A-101-CAC➡515A-205-CAC |

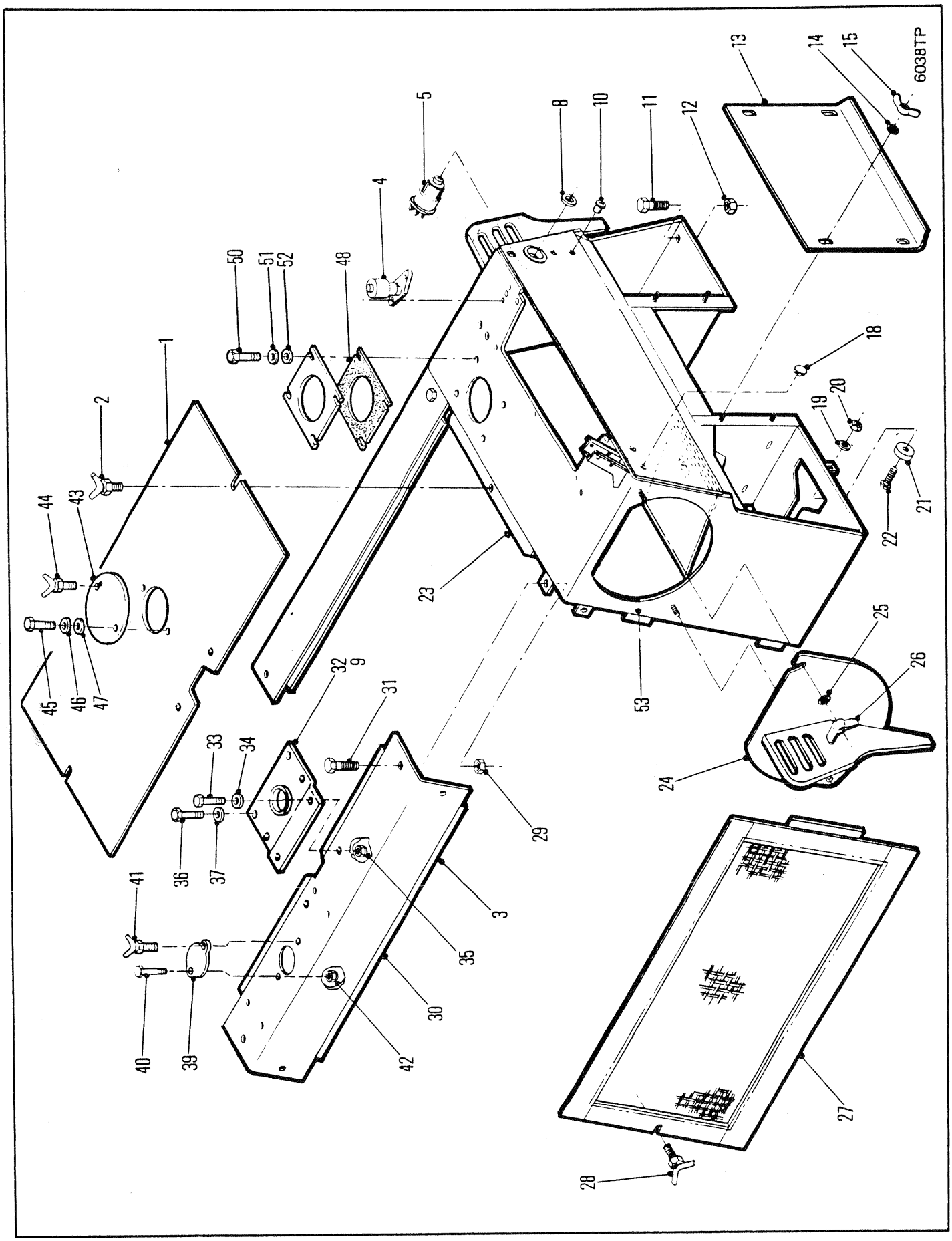
6038TP

# FIREWALL ASSEMBLY
# CLOISON PARE-FEU
# BRANDWAND-AUFBAU
# CONJUNTO DO PÁRA-FOGO
# CONJUNTO DEL CONTRAFUEGOS

| No. | Part No. | Qty | Description | Description | Benennung | Descrição | Descripción |
|---|---|---|---|---|---|---|---|
| 1 | 1922992 | 1 | Top panel assy | ass du pann sup | Deckplatteneinheit | cj painel superior | conj panel sup |
| 2 | 1919557 | 2 | Wing bolt | boulon à oreilles | Flügelbolzen | parafuso com orelhas | perno de orejas |
| 3 | 1922984 | 1 | Rail assy RH | assemblage du rail D | Schieneneinheit R | conj do trilho LD | conjunto rielLD |
| 4 | 1529625 | 1 | Indicator assy | indicateur ens | Messer vollst | indicador conj | indicador conj |
| 5 | 573548 | 1 | Switch | interrupteur | Schalter | interruptor | interruptor |
| 6 | --------- | 1 | Nut | écrou | Mutter | porca | tuerca |
| 7 | --------- | 1 | Lockwasher | rondelle frein | Sicherungsscheibe | arruela de pressão | arandela seguridad |
| 8 | 547237 | 1 | Disc | disque | Scheibe | disco | disco |
| 9 | [2]1922932 | 1 | Cover | couvercle | Deckel | tampa | tapa |
| 10 | 743200 | 2 | Plug | bouchon | Stopfen | bujão | tapón |
| 11 | 17C001028 | 4 | Bolt | boulon | Bolzen | parafuso | bulón |
| 12 | 17D000009 | 4 | Nut | écrou | Mutter | porca | tuerca |
| 13 | 1902037 | 1 | Panel | panneau | Tafel | painel | panel |
| 14 | 25E000017 | 4 | Flatwasher | rondelle plate | Unterlegscheibe | arruela chata | arandela plana |
| 15 | 16D000006 | 4 | Wing nut | écrou papillon | Flügelmutter | porca barboleta | tuerca mariposa |
| 16 | †661862 | 1 | Button | bouton | Knopf | botão | botón |
| 17 | †600259 | 1 | Button | bouton | Knopf | botão | botón |
| 18 | 696073 | 1 | Button | bouton | Knopf | botão | botón |
| 19 | 616775 | 1 | Washer | rondelle | Scheibe | arruela | arandela |
| 20 | 14D000010 | 1 | Nut | écrou | Mutter | porca | tuerca |
| 21 | 302568 | 1 | Bumper | butoir | Stossfnger | batente | tope |
| 22 | 86G001010 | 1 | Screw | vis | Schraube | parafuso | tornillo |
| 23 | 1917187 | 1 | Firewall assy | ass du pare-feu | Brandschotteinheit | cj parede refrat | conj pared cotrfg |
| 24 | 1914237 | 1 | Cover assy | couvercle ens | Deckel vollst | tampa conj | tapa conj |
| 25 | 25E000021 | 2 | Flatwasher | rondelle plate | Unterlegscheibe | arruela chata | arandela plana |
| 26 | 17D000006 | 2 | Locknut | contre-écrou | Gegenmutter | contra porca | contratuerca |
| 27 | 1922815 | 2 | Side panel | panneau latéral | Seitenblech | painel lateral | panel lateral |
| 28 | 1901362 | 2 | Wing bolt | boulon à oreilles | Flügelbolzen | parafuso com orelhas | perno de orejas |
| 29 | †65D000010 | 8 | Nut | écrou | Mutter | porca | tuerca |
| 30 | 1922961 | 1 | Rail assy LH | assemblage du rail G | Schieneneinheit L | conj do trilho LE | conjunto riel LI |
| 31 | 17C001020 | 8 | Bolt | boulon | Bolzen | parafuso | bulón |
| 32 | [1]1922934 | 1 | Cover assy | couvercle ens | Deckel vollst | tampa conj | tapa conj |
| 33 | 17C000620 | 1 | Bolt | boulon | Bolzen | parafuso | bulón |
| 34 | 25E000018 | 2 | Flatwasher | rondelle plate | Unterlegscheibe | arruela chata | arandela plana |
| 35 | 17D000003 | 1 | Nut | écrou | Mutter | porca | tuerca |
| 36 | 17C000616 | 2 | Bolt | boulon | Bolzen | parafuso | bulón |
| 37 | 27E000006 | 2 | Flatwasher | rondelle plate | Unterlegscheibe | arruela chata | arandela plana |
| 38 | †24E000006 | 2 | Lockwasher | rondelle frein | Sicherungsscheibe | arruela de pressão | arandela seguridad |
| 39 | 1909215 | 1 | Cover | couvercle | Deckel | tampa | tapa |
| 40 | 17C000620 | 1 | Bolt | boulon | Bolzen | parafuso | bulón |
| 41 | 1915267 | 1 | Thumbscrew | vis à oreilles | Daumenschraube | parafuso de orelha | tornillo de mano |
| 42 | 24E000006 | 2 | Lockwasher | rondelle frein | Sicherungsscheibe | arruela de pressão | arandela seguridad |
| 43 | 1909215 | 1 | Cover | couvercle | Deckel | tampa | tapa |
| 44 | 1915267 | 1 | Thumbscrew | vis à oreilles | Daumenschraube | parafuso de orelha | tornillo de mano |
| 45 | 17C000616 | 1 | Bolt | boulon | Bolzen | parafuso | bulón |
| 46 | 27E000006 | 1 | Flatwasher | rondelle plate | Unterlegscheibe | arruela chata | arandela plana |
| 47 | 24E000006 | 1 | Lockwasher | rondelle frein | Sicherungsscheibe | arruela de pressão | arandela seguridad |
| 48 | 1922918 | 1 | Gasket | garniture | Dichtung | gaxeta | empaquetadura |
| 49 | 1922919 | 1 | Cover | couvercle | Deckel | tampa | tapa |
| 50 | 17C000412 | 4 | Bolt | boulon | Bolzen | parafuso | bulón |
| 51 | 25E000013 | 4 | Flatwasher | rondelle plate | Unterlegscheibe | arruela chata | arandela plana |
| 52 | 4E0000004 | 4 | Lockwasher | rondelle frein | Sicherungsscheibe | arruela de pressão | arandela seguridad |
| 53 | 1902031 | 1 | Cover | couvercle | Deckel | tampa | tapa |

[1] □664,664Gr

[2] □666GM,666GM Gr

666GM 513G-206-CAC➡513G-9999-CAC
666GMGR 515G-206-CAC➡515G-9999-CAC

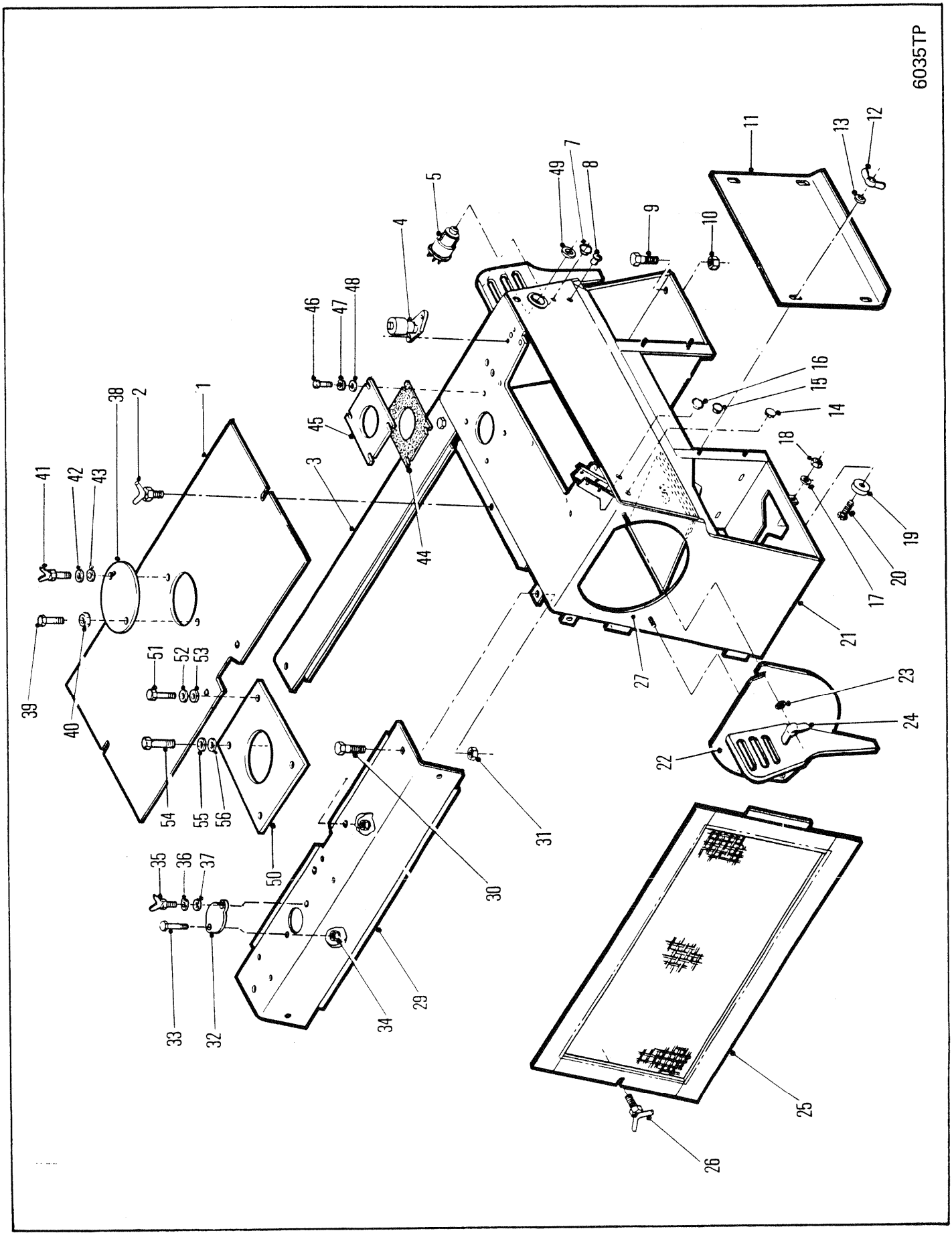
6035TP
1
2
3
4
5
6
7
8
9
10
11
12
13
14
15
16
17
18
19
20
21
22
23
24
25
26
27
29
30
31
32
33
34
35
36
37
38
39
40
41
42
43
44
45
46
47
48
49
50
51
52
53
54
55
56

# FIREWALL ASSEMBLY
# CLOISON PARE-FEU
# BRANDWAND-AUFBAU
# CONJUNTO DO PÁRA-FOGO
# CONJUNTO DEL CONTRAFUEGOS

| No. | Part No. | Qty | Description | Description | Benennung | Descrição | Descripción |
|---|---|---|---|---|---|---|---|
| 1 | 1918592 | 1 | Top panel | panneau supérieur | Deckplatte | painel superior | panel superior |
| 2 | 1909557 | 2 | Wing bolt | boulon à oreilles | Flügelbolzen | parafuso com orelhas | perno de orejas |
| 3 | 1922981 | 1 | rail assy RH | ass du rail D | Rechte Schienen E | cj do trilho LD | conj riel MD |
| 4 | 6515007 | 1 | Indicator assy | indicateur ens | Messer vollst | indicador conj | indicador conj |
| 5 | 573548 | 1 | Switch | interrupteur | Schalter | interruptor | interruptor |
| 6 | †600259 | 1 | Button starter | bouton démarrage | Anlknopf | botão arranque | botón arranque |
| 7 | 1301761 | 1 | Button | bouton | Knopf | botão | botón |
| 8 | 743200 | 1 | Button | bouton | Knopf | botão | botón |
| 9 | 17C001028 | 4 | Bolt | boulon | Bolzen | parafuso | bulón |
| 10 | 17D000009 | 4 | Nut | écrou | Mutter | porca | tuerca |
| 11 | 1902037 | 1 | Cover | couvercle | Deckel | tampa | tapa |
| 12 | 16D000006 | 4 | Wing nut | écrou papillon | Flügelmutter | porca barboleta | tuerca mariposa |
| 13 | †25E000017 | 4 | Flatwasher | rondelle plate | Unterlegscheibe | arruela chata | arandela plana |
| 14 | 1301761 | 1 | Button | bouton | Knopf | botão | botón |
| 15 | 696073 | 1 | Button | bouton | Knopf | botão | botón |
| 16 | 661862 | 1 | Button | bouton | Knopf | botão | botón |
| 17 | 616775 | 1 | Washer | rondelle | Scheibe | arruela | arandela |
| 18 | 14D000010 | 1 | Nut | écrou | Mutter | porca | tuerca |
| 19 | 302568 | 1 | Bumper | butoir | Stossfnger | batente | tope |
| 20 | 86G001010 | 1 | Screw | vis | Schraube | parafuso | tornillo |
| 21 | 1917187 | 1 | Firewall | pare-feu | Brandschollern | parede refrat | pared cotrfg |
| 22 | 1914237 | 1 | Cover | couvercle | Deckel | tampa | tapa |
| 23 | 25E000021 | 2 | Washer | rondelle | Scheibe | arruela | arandela |
| 24 | 17D000006 | 2 | Nut | écrou | Mutter | porca | tuerca |
| 25 | 1922815 | 2 | Panel | panneau | Tafel | painel | panel |
| 26 | 1901362 | 2 | Wing bolt | boulon à oreilles | Flügelbolzen | parafuso com orelhas | perno de orejas |
| 27 | 1902031 | 1 | Cover | couvercle | Deckel | tampa | tapa |
| 28 | †16D000006 | 1 | Wing nut | écrou papillon | Flügelmutter | porca barboleta | tuerca mariposa |
| 29 | 1915344 | 1 | Rail assy LH | assemblage du rail G | Schieneneinheit L | conj do trilho LE | conjunto riel LI |
| 30 | 17C001020 | 4 | Bolt | boulon | Bolzen | parafuso | bulón |
| 31 | 65D000010 | 4 | Nut | écrou | Mutter | porca | tuerca |
| 32 | 1909215 | 1 | Cover | couvercle | Deckel | tampa | tapa |
| 33 | 17C000620 | 1 | Bolt | boulon | Bolzen | parafuso | bulón |
| 34 | 17D000003 | 1 | Nut | écrou | Mutter | porca | tuerca |
| 35 | 1915267 | 1 | Thumbscrew | vis à oreilles | Daumenschraube | parafuso de orelha | tornillo de mano |
| 36 | 24E000006 | 1 | Lockwasher | rondelle frein | Sicherungsscheibe | arruela de pressão | arandela seguridad |
| 37 | 25E000017 | 1 | Flatwasher | rondelle plate | Unterlegscheibe | arruela chata | arandela plana |
| 38 | 1909215 | 1 | Cover | couvercle | Deckel | tampa | tapa |
| 39 | 17C000620 | 1 | Bolt | boulon | Bolzen | parafuso | bulón |
| 40 | 17D000003 | 1 | Nut | écrou | Mutter | porca | tuerca |
| 41 | 1915267 | 1 | Thumbscrew | vis à oreilles | Daumenschraube | parafuso de orelha | tornillo de mano |
| 42 | 24E000006 | 1 | Lockwasher | rondelle frein | Sicherungsscheibe | arruela de pressão | arandela seguridad |
| 43 | 25E000017 | 1 | Flatwasher | rondelle plate | Unterlegscheibe | arruela chata | arandela plana |
| 44 | 1922918 | 1 | Gasket | garniture | Dichtung | gaxeta | empaquetadura |
| 45 | 1922919 | 1 | Cover | couvercle | Deckel | tampa | tapa |
| 46 | 17C000412 | 4 | Bolt | boulon | Bolzen | parafuso | bulón |
| 47 | 25E000013 | 4 | Flatwasher | rondelle plate | Unterlegscheibe | arruela chata | arandela plana |
| 48 | 4E0000004 | 4 | Lockwasher | rondelle frein | Sicherungsscheibe | arruela de pressão | arandela seguridad |
| 49 | 547237 | 1 | Disc | disque | Scheibe | disco | disco |
| 50 | 1923059 | 1 | Cover assy | couvercle ens | Deckel vollst | tampa conj | tapa conj |
| 51 | 17C000408 | 1 | Bolt | boulon | Bolzen | parafuso | bulón |
| 52 | 25E000013 | 1 | Flatwasher | rondelle plate | Unterlegscheibe | arruela chata | arandela plana |
| 53 | 4E0000004 | 1 | Lockwasher | rondelle frein | Sicherungsscheibe | arruela de pressão | arandela seguridad |
| 54 | 17C000612 | 1 | Bolt | boulon | Bolzen | parafuso | bulón |
| 55 | 27E000006 | 2 | Flatwasher | rondelle plate | Unterlegscheibe | arruela chata | arandela plana |
| 56 | 4E0000006 | 2 | Lockwasher | rondelle frein | Sicherungsscheibe | arruela de pressão | arandela seguridad |

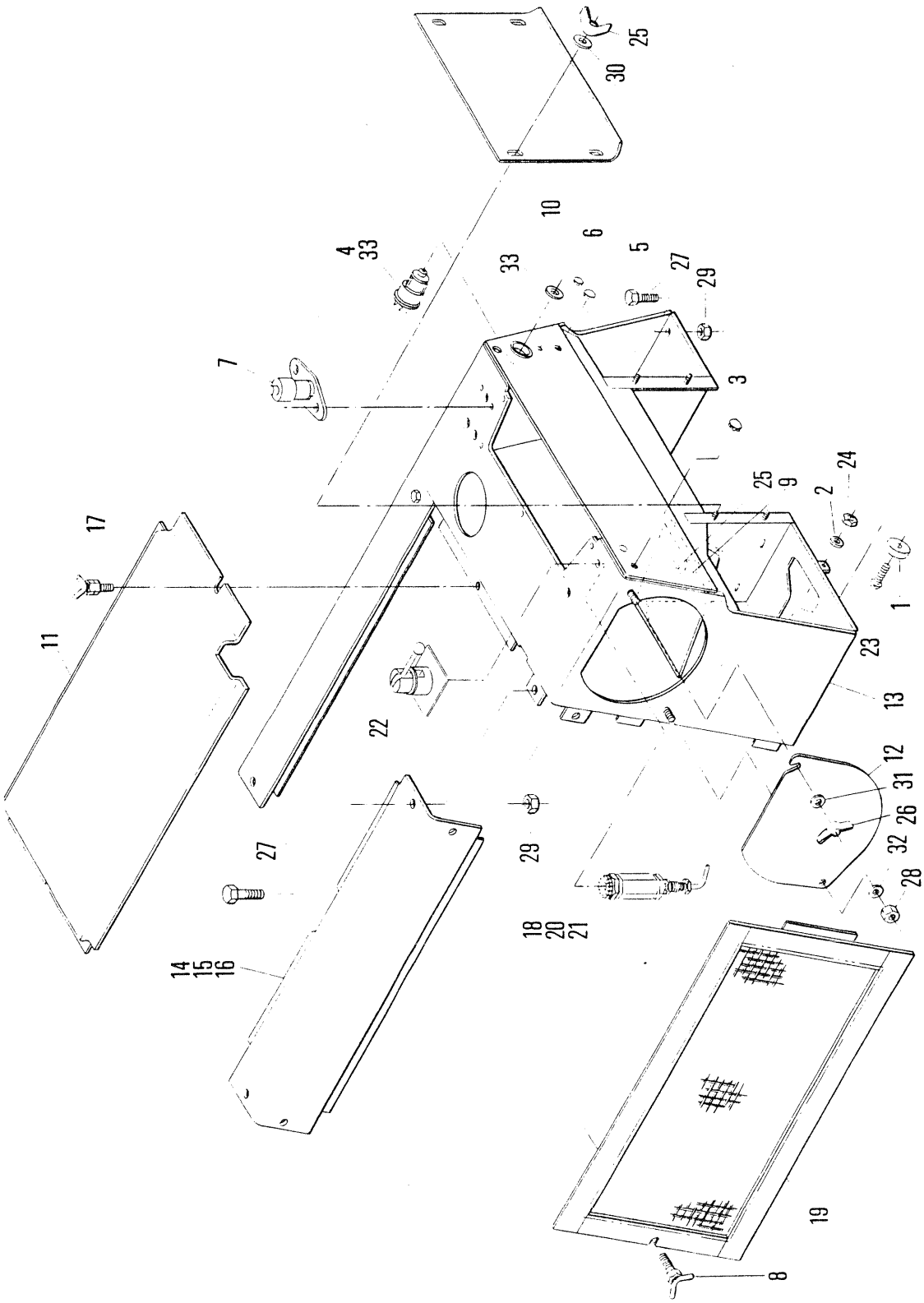
1
2
3
4
5
6
7
8
9
10
11
12
13
14
15
16
17
18
19
20
21
22
23
24
25
26
27
28
29
30
31
32
33
5609TP

# FIREWALL ASSEMBLY
# CLOISON PARE-FEU
# BRANDWAND-AUFBAU
# CONJUNTO DO PÁRA-FOGO
# CONJUNTO DEL CONTRAFUEGOS

| No. | Part No. | Qty | Description | Description | Benennung | Descrição | Descripción |
|---|---|---|---|---|---|---|---|
| 1 | **302568** | 1 | Bumper | butoir | Stossfnger | batente | tope |
| 2 | **616775** | 1 | Washer | rondelle | Scheibe | arruela | arandela |
| 3 | **696073** | 2 | Button | bouton | Knopf | botão | botón |
| 4 | [3]**733622** | 1 | Switch | interrupteur | Schalter | interruptor | interruptor |
| 5 | **743200** | 1 | Plug | bouchon | Stopfen | bujão | tapón |
| 6 | **1310761** | 1 | Plug | bouchon | Stopfen | bujão | tapón |
| 7 | **1529625** | 1 | Indicator assy | indicateur ens | Messer vollst | indicador conj | indicador conj |
| 8 | **1901362** | 2 | Bolt | boulon | Bolzen | parafuso | bulón |
| 9 | **1902031** | 1 | Cover plate | couvre-joint | Deckelplatte | prato cobertura | cubreplaca |
| 10 | **1902037** | 1 | Cover | couvercle | Deckel | tampa | tapa |
| 11 | **1902197** | 1 | Panel | panneau | Tafel | painel | panel |
| 12 | **1902861** | 1 | Cover | couvercle | Deckel | tampa | tapa |
| 13 | **1904646** | 1 | Firewall assy | ass du pare-feu | Brandschotteinheit | cj parede refrat | conj pared cotrfg |
| 14 | **1904686** | 1 | Rail RH | rail CD | Schiene R | trilho LD | riel LD |
| 15 | **1904689** | 1 | Rail LH | barre G | Geländer L | trilho LE | riel LI |
| 16 | **1907907** | 1 | Rail LH | barre G | Geländer L | trilho LE | riel LI |
| 17 | **1909557** | 2 | Bolt | boulon | Bolzen | parafuso | bulón |
| 18 | [1]**1917793** | 1 | Lock-up valve | soupape de sreté | Verschlu-ventil | válv de fech | válv de cierre |
| 19 | **1922815** | 2 | Panel side | côté du panneau | Abdeckseite | painel lateral | panel lateral |
| 20 | †**1990398** | 1 | Repair kit | trousse de reparation | Reparatursatz | conjunto de reparo | juego de reparación |
| 21 | †**1990399** | 1 | Pushrod assy | tige poussoir ens | Stösselstange vollst | haste impulso conj | varilla empuje conj |
| 22 | **1990604** | 1 | Cam&handle | came&manette | Nockenhebel | camo&punho | leva&manija |
| 23 | **2G001010** | 1 | Screw | vis | Schraube | parafuso | tornillo |
| 24 | **14D000010** | 1 | Nut | écrou | Mutter | porca | tuerca |
| 25 | **16D000006** | 5 | Nut | écrou | Mutter | porca | tuerca |
| 26 | **16D000008** | 1 | Nut | écrou | Mutter | porca | tuerca |
| 27 | **17C001024** | 12 | Bolt | boulon | Bolzen | parafuso | bulón |
| 28 | **17D000006** | 1 | Nut | écrou | Mutter | porca | tuerca |
| 29 | **17D000009** | 12 | Nut | écrou | Mutter | porca | tuerca |
| 30 | **25E000017** | 4 | Flatwasher | rondelle plate | Unterlegscheibe | arruela chata | arandela plana |
| 31 | **25E000021** | 1 | Washer | rondelle | Scheibe | arruela | arandela |
| 32 | **619027** | 1 | Washer | rondelle | Scheibe | arruela | arandela |
| 33 | [2]§--------- | 1 | Ring | anneau | Ring | anel | anillo |

[1] Inc 20 & 22. Ref RSG 107

[2] See 4
[2] Voir 4
[2] Siehe 4
[2] Veja 4
[2] Véase 4

[3] Inc 33

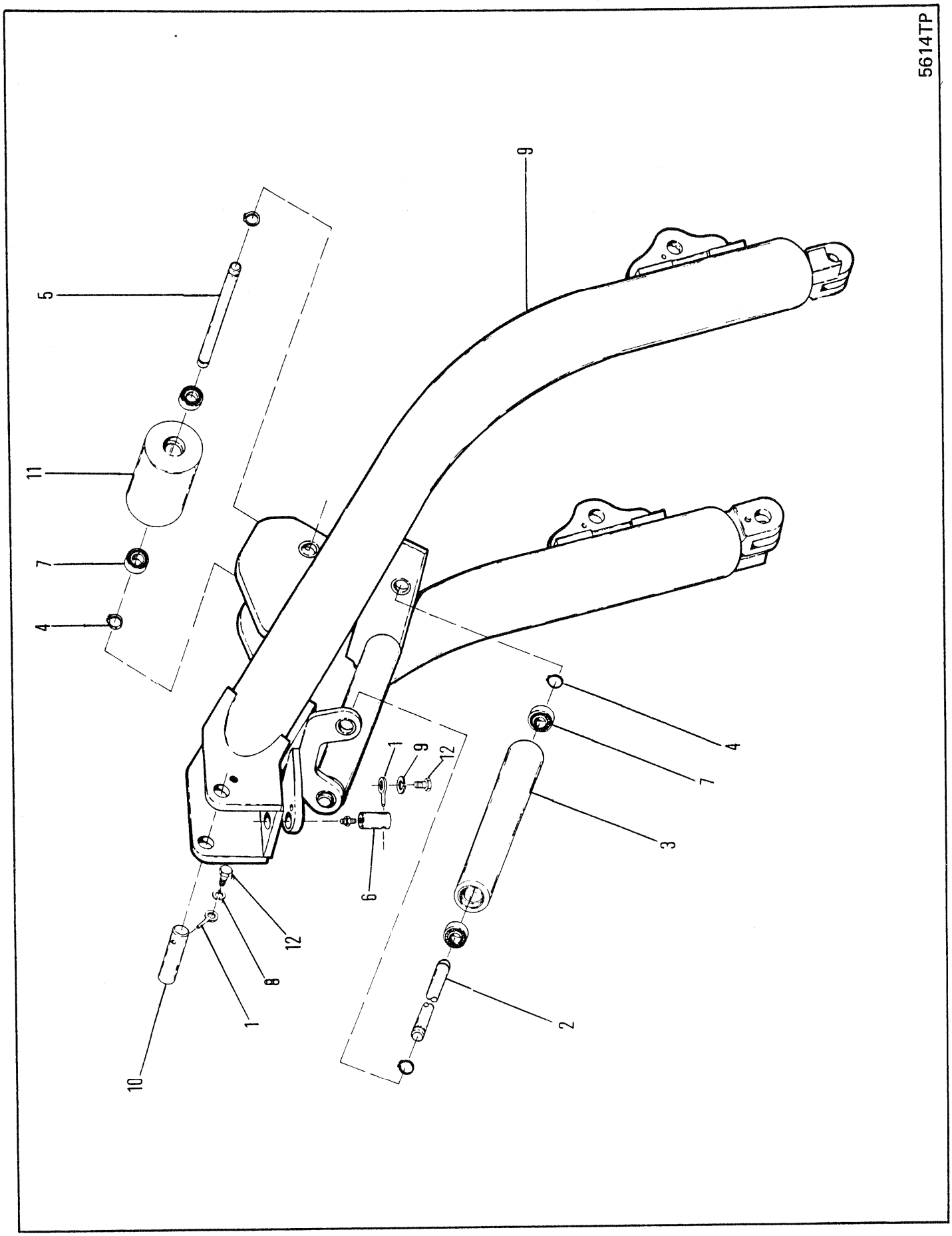
5614TP
9
5
11
7
4
1
9
12
6
4
7
3
12
8
1
10
2

# ARCH ASSEMBLY
# ASSEMBLAGE D'ARCHE
# BOGENEINHEIT
# CONJUNTO DO ARCO
# CONJUNTO DO ARCO

| No. | Part No. | Qty | Description | Description | Benennung | Descrição | Descripción |
|---|---|---|---|---|---|---|---|
| A | **1913923** | 1 | Arch assy | assemblage darche | Bogeneinheit | conjunto do arco | conjunto do arco |
| 1 | **586452** | 2 | Lockpin | goupille de blocage | Sperrstift | pino de trava | pasador de seguridad |
| 2 | **1900194** | 2 | Shaft | arbre | Welle | ávore | árbol |
| 3 | **1901550** | 2 | Roller | galet | Rolle | rolete | rodillo |
| 4 | **1902877** | 6 | Ring | anneau | Ring | anel | anillo |
| 5 | **1905646** | 1 | Shaft | arbre | Welle | ávore | árbol |
| 6 | **1907252** | 1 | Pin | goupille | Stift | pino | pasador |
| 7 | **1908365** | 8 | Bearing | palier | Lager | mancal | cojinete |
| 8 | **27E000008** | 2 | Washer | rondelle | Scheibe | arruela | arandela |
| 9 | **24E000008** | 2 | Lockwasher | rondelle frein | Sicherungsscheibe | arruela de pressão | arandela seguridad |
| 10 | **1916441** | 1 | Pin | goupille | Stift | pino | pasador |
| 11 | **1923628** | 1 | Roller | galet | Rolle | rolete | rodillo |
| 12 | **17C000820** | 2 | Bolt | boulon | Bolzen | parafuso | bulón |

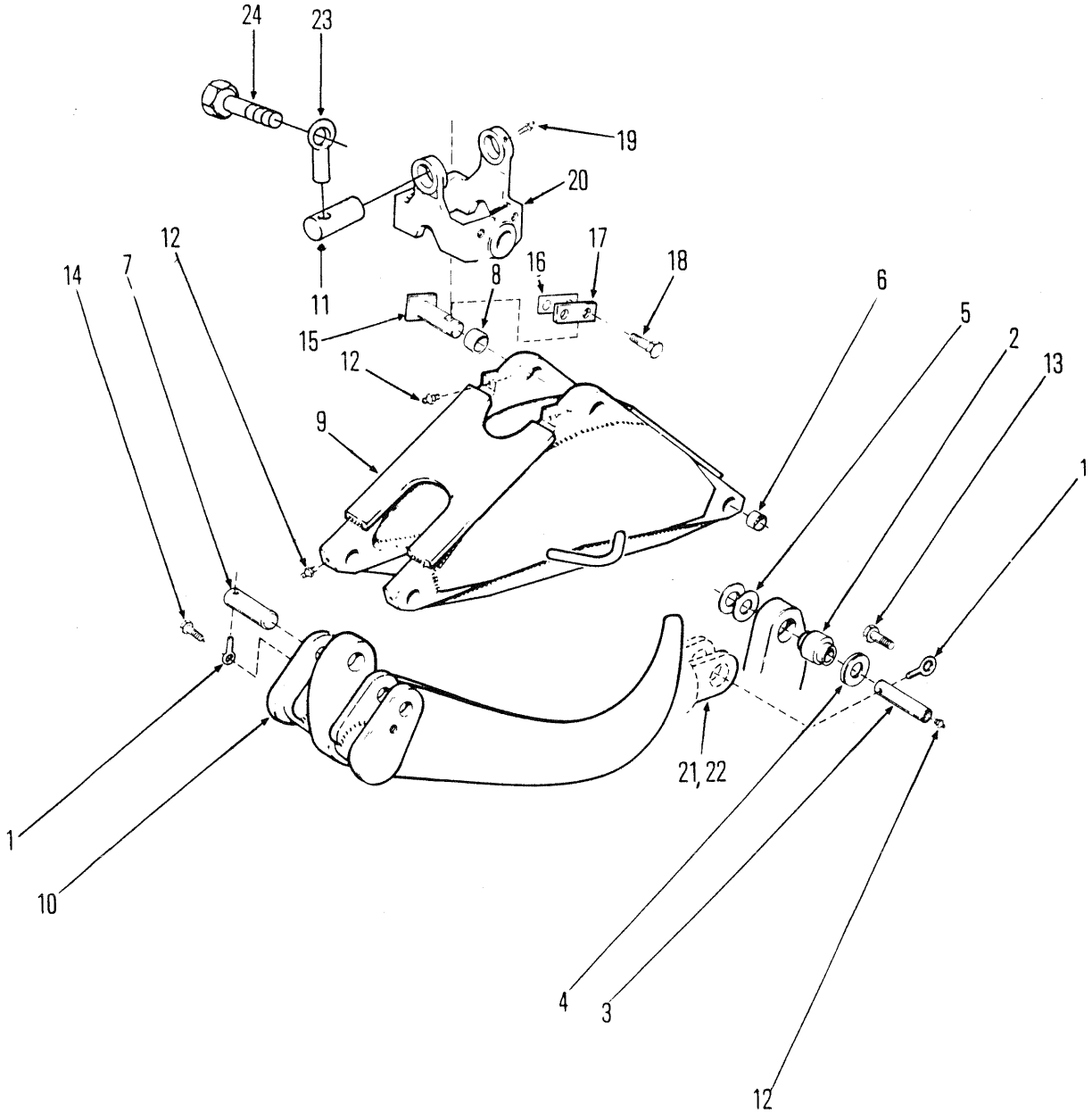


5613TP

# GRAPPLE ASSEMBLY 70 IN -1778,0 MM
# ENSEMBLE DE GRAPPIN 70 IN -1778,0 MM
# GREIFER-BAUGRUPPE 70 IN -1778,0 MM
# CONJUNTO DE GARRA 70 IN -1778,0 MM
# CONJUNTO DE GARRA 70 IN -1778,0 MM

| No. | Part No. | Qty | Description | Description | Benennung | Descrição | Descripción |
|---|---|---|---|---|---|---|---|
| A | **1990594** | 1 | Grapple assy | ass de la grappin | Greifereinheit | conj de garras | conj agarre |
| 1 | **586452** | 6 | Lockpin | goupille de blocage | Sperrstift | pino de trava | pasador de seguridad |
| 2 | **1573309** | 2 | Bushing | chemise | Buchse | bucha | buje |
| 3 | **1903262** | 2 | Pin | goupille | Stift | pino | pasador |
| 4 | **1903689** | 1 | Thrust washer | rondelle pouss | Ritzeldruck | arruela empuxo | arandela empuje |
| 5 | ‡**1905176** | - | Shim | cale | Beilage | calço | planchita |
| 6 | **1905507** | 4 | Bushing | chemise | Buchse | bucha | buje |
| 7 | **1905513** | 4 | Pin | goupille | Stift | pino | pasador |
| 8 | **1905553** | 2 | Bushing | chemise | Buchse | bucha | buje |
| 9 | **1907000** | 1 | Box | bote | Kasten | caixa | caja |
| 10 | **1907030** | 2 | Arm | bras | Arm | braço | brazo |
| 11 | **1905513** | 2 | Pin | goupille | Stift | pino | pasador |
| 12 | **10H000025** | 10 | Fitting | ajustage | Verbindung | ajuste | accesorio |
| 13 | **17C000824** | 2 | Bolt | boulon | Bolzen | parafuso | bulón |
| 14 | **33C000816** | 4 | Bolt | boulon | Bolzen | parafuso | bulón |
| 15 | **1907838** | 2 | Pin | goupille | Stift | pino | pasador |
| 16 | ‡**1907842** | - | Shim | cale | Beilage | calço | planchita |
| 17 | **1907841** | 2 | Lockplate | plaque darrêt | Schlossblech | chapa retentora | chapa seguridad |
| 18 | **33C000816** | 4 | Bolt | boulon | Bolzen | parafuso | bulón |
| 19 | **10H000025** | 2 | Fitting | ajustage | Verbindung | ajuste | accesorio |
| 20 | **1906238** | 1 | Yoke | chape | Joch | garfo | horqueta |
| 21 | [1]--------- | 1 | Cylinder | cylindre | Zylinder | cilindro | cilindro esclavo |
| 22 | [2]--------- | 1 | Cylinder | cylindre | Zylinder | cilindro | cilindro esclavo |
| 23 | **586452** | 2 | Lockpin | goupille de blocage | Sperrstift | pino de trava | pasador de seguridad |
| 24 | **33C000820** | 2 | Bolt | boulon | Bolzen | parafuso | bulón |

[1] Ref E1 13000

[2] Ref E1 13050

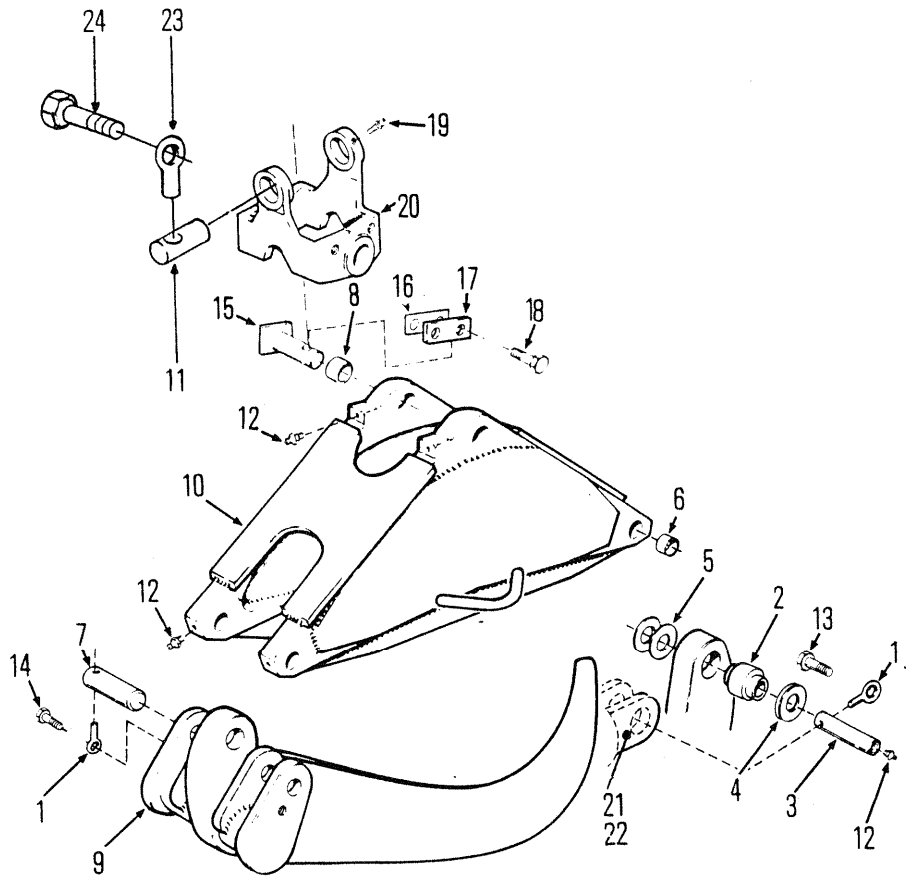


5612TP

# GRAPPLE ASSEMBLY 102 IN - 2,59 M
# ENSEMBLE DE GRAPPIN 102 IN - 2,59 M
# GREIFER-BAUGRUPPE 102 IN - 2,59 M
# CONJUNTO DE GARRA 102 IN - 2,59 M
# CONJUNTO DE GARRA 102 IN - 2,59 M

| No. | Part No. | Qty | Description | Description | Benennung | Descrição | Descripción |
|---|---|---|---|---|---|---|---|
| A | **1990595** | 1 | Grapple assy | ass de la grappin | Greifereinheit | conj de garras | conj agarre |
| 1 | **586452** | 6 | Lockpin | goupille de blocage | Sperrstift | pino de trava | pasador de seguridad |
| 2 | **1573309** | 2 | Bushing | chemise | Buchse | bucha | buje |
| 3 | **1903262** | 2 | Pin | goupille | Stift | pino | pasador |
| 4 | **1903689** | 1 | Thrust washer | rondelle pouss | Ritzeldruck | arruela empuxo | arandela empuje |
| 5 | ‡**1905176** | - | Shim | cale | Beilage | calço | planchita |
| 6 | **1905507** | 4 | Bushing | chemise | Buchse | bucha | buje |
| 7 | **1905513** | 4 | Pin | goupille | Stift | pino | pasador |
| 8 | **1905553** | 2 | Bushing | chemise | Buchse | bucha | buje |
| 9 | **1907440** | 2 | Arm | bras | Arm | braço | brazo |
| 10 | **1907580** | 1 | Box | bote | Kasten | caixa | caja |
| 11 | **1905513** | 2 | Pin | goupille | Stift | pino | pasador |
| 12 | **10H000025** | 10 | Fitting | ajustage | Verbindung | ajuste | accesorio |
| 13 | **33C000820** | 4 | Bolt | boulon | Bolzen | parafuso | bulón |
| 14 | **33C000816** | 4 | Bolt | boulon | Bolzen | parafuso | bulón |
| 15 | **1907838** | 2 | Pin | goupille | Stift | pino | pasador |
| 16 | ‡**1907842** | - | Shim | cale | Beilage | calço | planchita |
| 17 | **1907841** | 2 | Lockplate | plaque darrêt | Schlossblech | chapa retentora | chapa seguridad |
| 18 | **33C000816** | 4 | Bolt | boulon | Bolzen | parafuso | bulón |
| 19 | **10H000025** | 2 | Fitting | ajustage | Verbindung | ajuste | accesorio |
| 20 | **1906238** | 1 | Yoke | chape | Joch | garfo | horqueta |
| 21 | [1]--------- | 1 | Cylinder | cylindre | Zylinder | cilindro | cilindro esclavo |
| 22 | [2]--------- | 1 | Cylinder | cylindre | Zylinder | cilindro | cilindro esclavo |
| 23 | **586452** | 2 | Lockpin | goupille de blocage | Sperrstift | pino de trava | pasador de seguridad |
| 24 | **33C000820** | 2 | Bolt | boulon | Bolzen | parafuso | bulón |

[1] Ref E1 13000

[2] Ref E1 13050

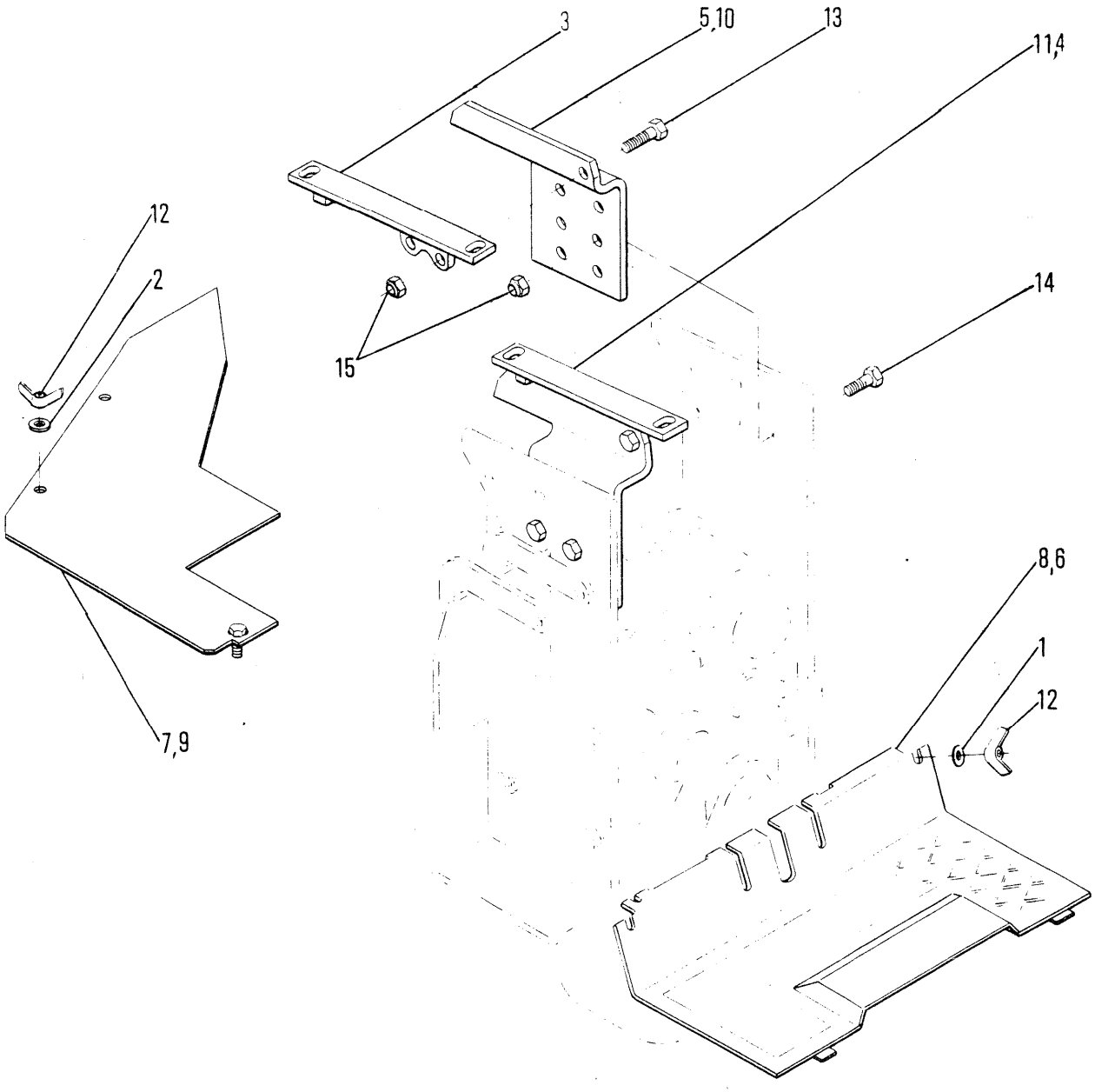
3
5,10
13
11,4
12
2
14
15
8,6
1
12
7,9
5691TP

# FLOORBOARD & SEAT SUPPORT
# PLANCHER ET SUPPORT DU SIÈGE
# BODENPLATTE UND SITZSTUTZE
# SUPORTE ASSOALHO E ASSENTO
# SOPORTE PISO Y ASIENTO

| No. | Part No. | Qty | Description | Description | Benennung | Descrição | Descripción |
|---|---|---|---|---|---|---|---|
| 1 | **619024** | 2 | Washer | rondelle | Scheibe | arruela | arandela |
| 2 | **664423** | 3 | Washer | rondelle | Scheibe | arruela | arandela |
| 3 | **1901739** | 2 | Seat support | support sièege | Sitzabstützung | suporte assento | soporte asiento |
| 4 | **1902034** | 1 | Bracket RH | support CD | Winkel R | grampo LD | grampa LD |
| 5 | **1902035** | 1 | Bracket LH | support CG | Winkel L | grampo LE | grampa LD |
| 6 | [1]†**1902604** | 1 | Floor panel | panneau du fond | Bodenplatte | painel do piso | panel del piso |
| 7 | **1902962** | 1 | Cover panel | panneau de couvercle | Deckplatte | painel de cobertura | panel de cubierta |
| 8 | **1902976** | 1 | Floor panel | panneau du fond | Bodenplatte | painel do piso | panel del piso |
| 9 | [3]**1907084** | 1 | Cover panel | panneau de couvercle | Deckplatte | painel de cobertura | panel de cubierta |
| 10 | [2]**1913760** | 1 | Bracket LH | support CG | Winkel L | grampo LE | grampa LD |
| 11 | [2]**1913761** | 1 | Bracket RH | support CD | Winkel R | grampo LD | grampa LD |
| 12 | **16D000006** | 5 | Nut | écrou | Mutter | porca | tuerca |
| 13 | **17C000824** | 2 | Bolt | boulon | Bolzen | parafuso | bulón |
| 14 | **17C001228** | 4 | Bolt | boulon | Bolzen | parafuso | bulón |
| 15 | **17D000006** | 6 | Nut | écrou | Mutter | porca | tuerca |

[1] Parking brake optional
[1] Frein de stationnement en option
[1] Parkbremse als Sonderausstattung lieferbar
[1] Freio de estacionamento opcional
[1] Freno de estacionamiento opcional

[2] 664Gr optional rotating seat
[2] Siège rotatif 664Gr en option
[2] 664 Gr-Drehsitz als Sonderausstattung
[2] Assento rotativo opcional 664Gr
[2] Asiento rotativo opcional 664Gr

[3] 664Gr

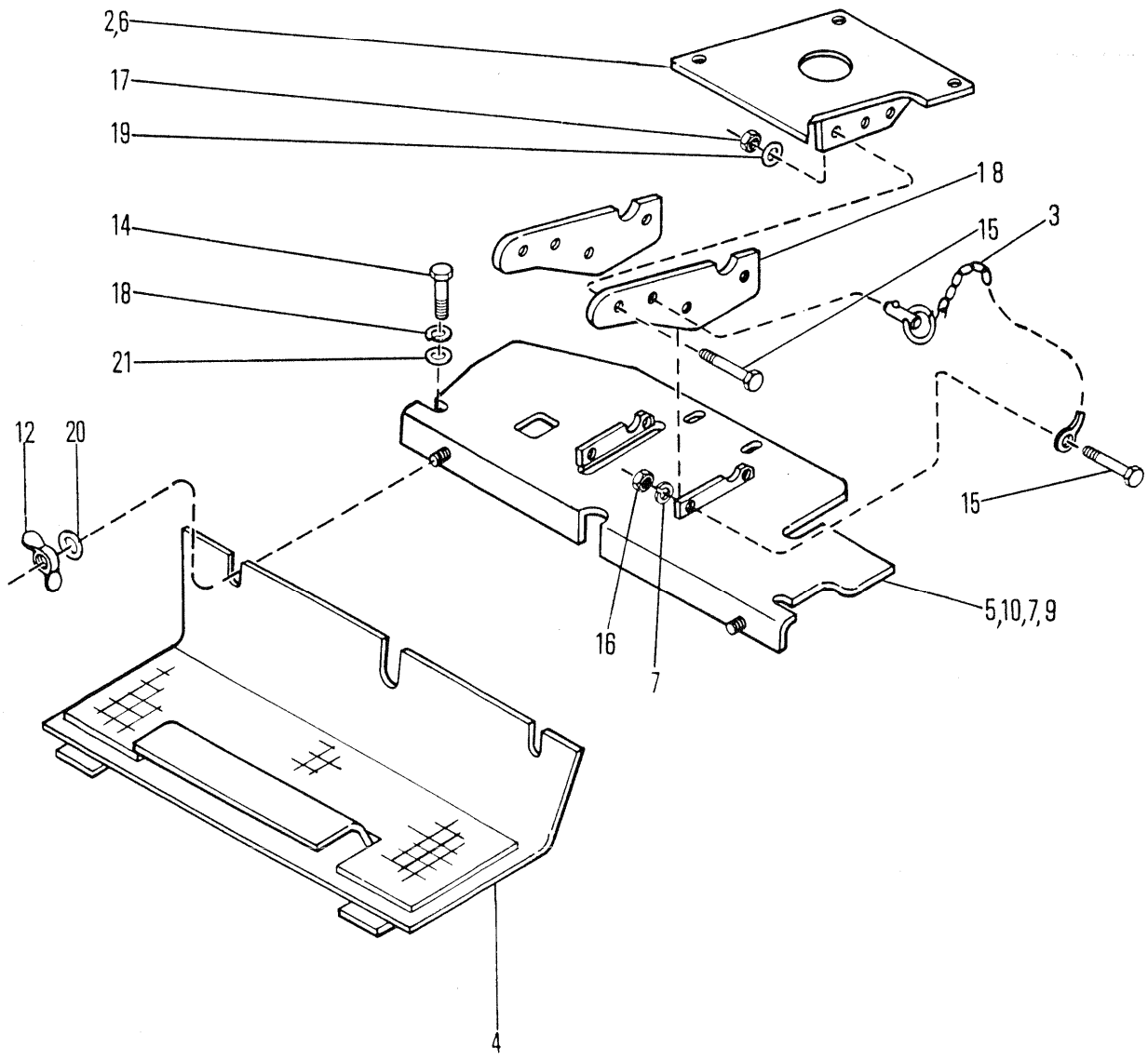
2,6
17
19
14
18
21
12
20
1 8
15
3
15
5,10,7,9
16
7
4
5690TP

# FLOORBOARD & SEAT SUPPORT
# PLANCHER ET SUPPORT DU SIÈGE
# BODENPLATTE UND SITZSTUTZE
# SUPORTE ASSOALHO E ASSENTO
# SOPORTE PISO Y ASIENTO

| No. | Part No. | Qty | Description | Description | Benennung | Descrição | Descripción |
|---|---|---|---|---|---|---|---|
| 1 | 1907886 | 2 | Support | support | Abstützung | suporte | soporte |
| 2 | 1908865 | 1 | Plate seat | siège de la plaque | Plattensitz | assento da chapa | asiento placa |
| 3 | [1]1909699 | 2 | Faspin assy | assemblage faspin | Faspin vollst | cj do pino prend | conjunto horq |
| 4 | 1909793 | 1 | Floorboard | plancher | Bodenblech | assoalho | piso |
| 5 | [2]†27E000006 | 2 | Flatwasher | rondelle plate | Unterlegscheibe | arruela chata | arandela plana |
| 6 | 1913567 | 1 | Plate seat | siège de la plaque | Plattensitz | assento da chapa | asiento placa |
| 7 | [4]§------- | 2 | Lockwasher | rondelle frein | Sicherungsscheibe | arruela de pressão | arandela seguridad |
| 8 | 1916476 | 2 | Bracket | support | Winkel | grampo | grampa |
| 9 | 1917682 | 1 | Plate | plaque | Platte | placa | placa |
| 10 | [2]1917710 | 1 | Plate | plaque | Platte | placa | placa |
| 11 | [2]†1923640 | 1 | Cover | couvercle | Deckel | tampa | tapa |
| 12 | 16D000006 | 2 | Nut | écrou | Mutter | porca | tuerca |
| 13 | [2]†17C000616 | 2 | Bolt | boulon | Bolzen | parafuso | bulón |
| 14 | 17C000820 | 4 | Bolt | boulon | Bolzen | parafuso | bulón |
| 15 | [3]17C000824 | 4 | Bolt | boulon | Bolzen | parafuso | bulón |
| 16 | 17D000006 | 2 | Nut | écrou | Mutter | porca | tuerca |
| 17 | 18D000005 | 4 | Nut | écrou | Mutter | porca | tuerca |
| 18 | 24E000008 | 4 | Lockwasher | rondelle frein | Sicherungsscheibe | arruela de pressão | arandela seguridad |
| 19 | 25E000015 | 4 | Washer | rondelle | Scheibe | arruela | arandela |
| 20 | 25E000018 | 2 | Washer | rondelle | Scheibe | arruela | arandela |
| 21 | 25E000021 | 2 | Washer | rondelle | Scheibe | arruela | arandela |

[1] Inc 7, 15&16

[2] □515A-101➡9999-CAC

[3] 666Gr

[4] See 3
[4] Voir 3
[4] Siehe 3
[4] Veja 3
[4] Véase 3

666CUM 500E-101-CAC➡500E-9999-CAC
666GM 513E-101-CAC➡513G-9999-CAC
666GMGR 515A-101-CAC➡515A-9999-CAC

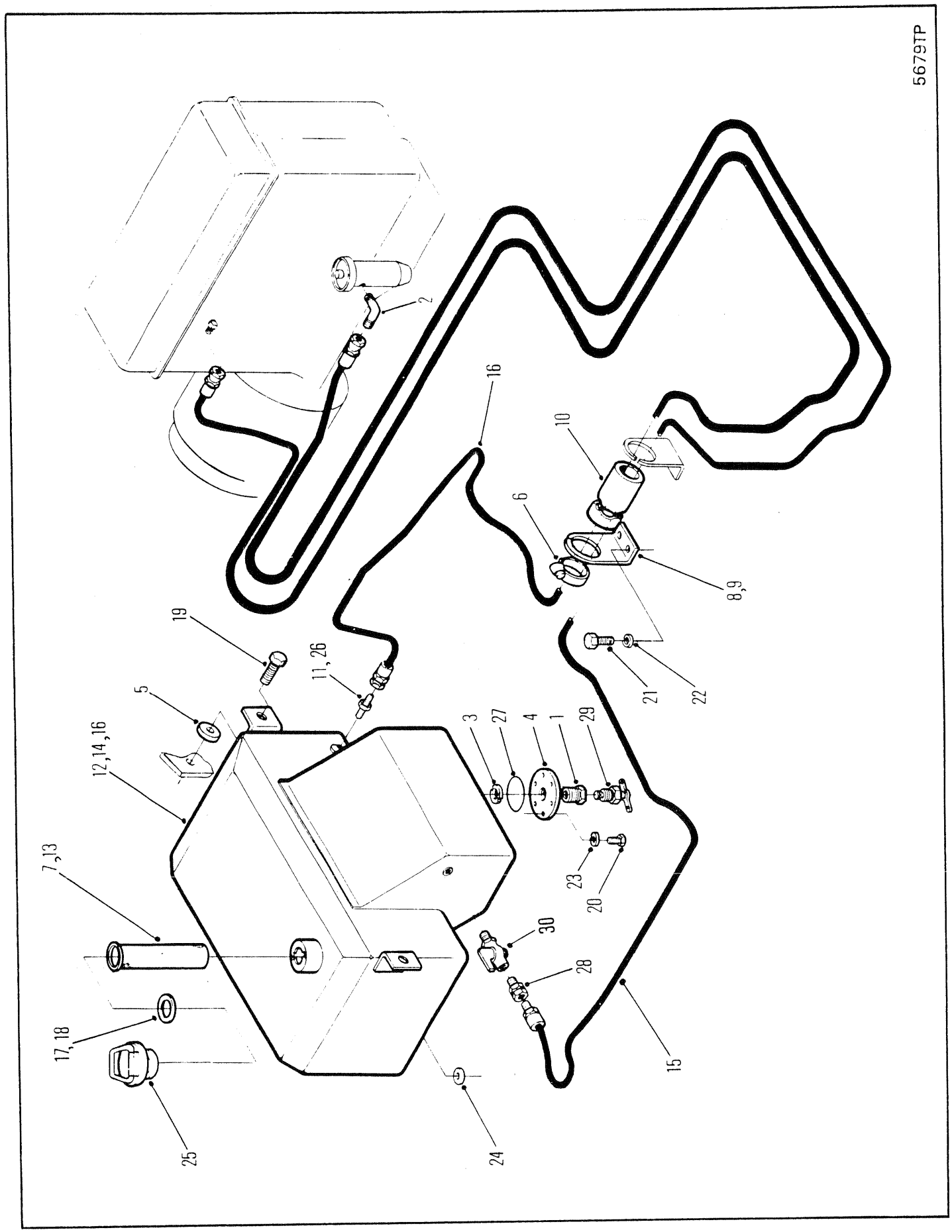
5679TP
2
16
10
6
8,9
19
11,26
5
12,14,16
3
27
4
1
29
21
22
7,13
23
20
30
28
17,18
15
25
24

# FUEL TANK & LINES
# RÉSERVOIR DE CARBURANT & CANALISATION
# KRAFTSTOFFTANK & LEITUNGEN
# TANQUE DE COMBUSTÍVEL & TUBULAÇÕES
# DEPÓSITO & LÍNEAS DE COMBUSTIBLE

| No. | Part No. | Qty | Description | Description | Benennung | Descrição | Descripción |
|---|---|---|---|---|---|---|---|
| 1 | **356622** | 1 | Reducer | réducteur | Reduzierstück | redutor | reductor |
| 2 | **524657** | 1 | Elbow | coude | Winkelrohr | cotovêlo | codo |
| 3 | **525293** | 1 | Magnet | aimant | Magnet | imã | imán |
| 4 | **587613** | 1 | Cover | couvercle | Deckel | tampa | tapa |
| 5 | **664871** | 3 | Pad | tampon | Polster | almofada | almohadilla |
| 6 | **879717** | 1 | Clamp | pince | Schelle | braçadeira | abrazadera |
| 7 | [4]**1901464** | 1 | Strainer | tamis | Sieb | coador | tamiz |
| 8 | **1901981** | 1 | Bracket | support | Winkel | grampo | grampa |
| 9 | [1]**1903693** | 1 | Bracket | support | Winkel | grampo | grampa |
| 10 | [2]**1905644** | 1 | Guard | protecteur | Schutz | proteção | protector |
| 11 | **1905687** | 1 | Fitting | ajustage | Verbindung | ajuste | accesorio |
| 12 | [5]**1906183** | 1 | Tank | réservoir | Tank | tanque | tanque |
| 13 | **1906829** | 1 | Strainer | tamis | Sieb | coador | tamiz |
| 14 | [4]**1919122** | 1 | Tank | réservoir | Tank | tanque | tanque |
| 15 | **1919915** | 1 | Hose | tuyau flexible | Schlauch | mangueira | manguera |
| 16 | **1919916** | 1 | Hose | tuyau flexible | Schlauch | mangueira | manguera |
| 17 | **1990900** | 1 | Gasket | garniture | Dichtung | gaxeta | empaquetadura |
| 18 | **1990901** | 1 | Gasket | garniture | Dichtung | gaxeta | empaquetadura |
| 19 | **17C001036** | 3 | Bolt | boulon | Bolzen | parafuso | bulón |
| 20 | **18C000212** | 6 | Bolt | boulon | Bolzen | parafuso | bulón |
| 21 | **17C000620** | 6 | Bolt | boulon | Bolzen | parafuso | bulón |
| 22 | **24E000005** | 2 | Lockwasher | rondelle frein | Sicherungsscheibe | arruela de pressão | arandela seguridad |
| 23 | **27E000006** | 6 | Lockwasher | rondelle frein | Sicherungsscheibe | arruela de pressão | arandela seguridad |
| 24 | **27E000010** | 1 | Lockwasher | rondelle frein | Sicherungsscheibe | arruela de pressão | arandela seguridad |
| 25 | [3]**1919500** | 1 | Cap | chapeau | Kappe | tampa | tapa |
| 26 | **25F000002** | 1 | Elbow | coude | Winkelrohr | cotovêlo | codo |
| 27 | **25K040428** | 1 | O-ring | joint torique | O Ring | anel-O | anillo-O |
| 28 | **38F000009** | 1 | Adapter | adaptateur | Zwischenstück | adaptador | adaptador |
| 29 | **74F000004** | 1 | Draincock | robinet vidange | Abflusshahn | torneira purga | grifo purga |
| 30 | **1901502** | 1 | Valve | soupape | Ventil | válvula | válvula |

[1] □C-9046-881&➡

[2] □C-9046-101➡1000

[3] Inc 17 & 18

[4] 666Gr

[5] 666Cable

666GM 513E-101-CAC➡513G-9999-CAC
666GMGR 515A-101-CAC➡515A-9999-CAC

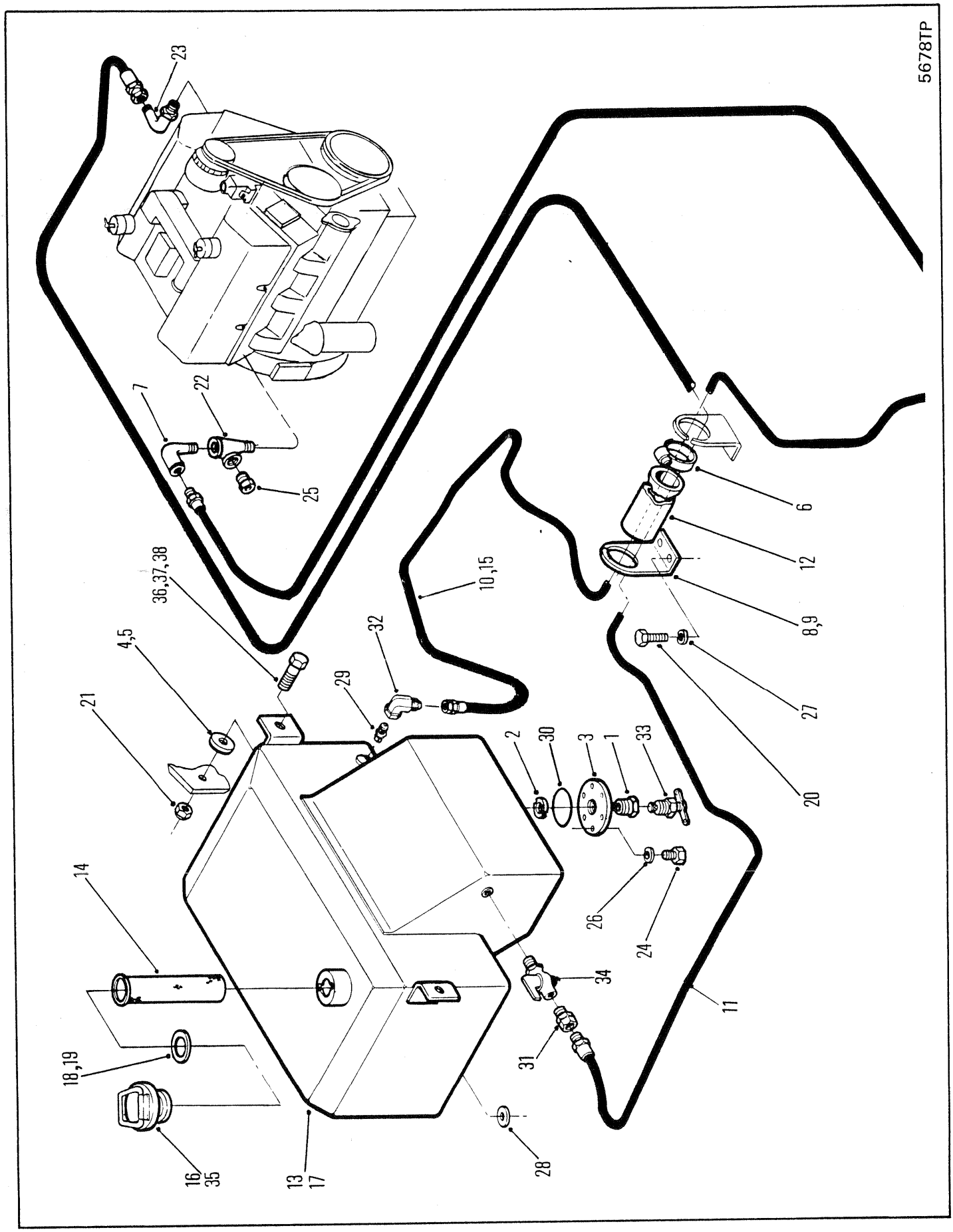
5678TP
23
22
7
25
36,37,38
4,5
21
32
29
10,15
6
12
8,9
27
20
2
30
3
1
33
26
24
34
31
11
14
18,19
16
35
13
17
28

# FUEL TANK & LINES
# RÉSERVOIR DE CARBURANT & CANALISATION
# KRAFTSTOFFTANK & LEITUNGEN
# TANQUE DE COMBUSTÍVEL & TUBULAÇÕES
# DEPÓSITO & LÍNEAS DE COMBUSTIBLE

| No. | Part No. | Qty | Description | Description | Benennung | Descrição | Descripción |
|---|---|---|---|---|---|---|---|
| 1 | 356622 | 1 | Reducer | réducteur | Reduzierstück | redutor | reductor |
| 2 | 525293 | 1 | Magnet | aimant | Magnet | imã | imán |
| 3 | 587613 | 1 | Cover | couvercle | Deckel | tampa | tapa |
| 4 | [3]616802 | 1 | Flatwasher | rondelle plate | Unterlegscheibe | arruela chata | arandela plana |
| 5 | 664871 | 3 | Pad | tampon | Polster | almofada | almohadílla |
| 6 | 879717 | 1 | Clamp | pince | Schelle | braçadeira | abrazadera |
| 7 | [2]940638 | 1 | Fitting | ajustage | Verbindung | ajuste | accesorio |
| 8 | 1901981 | 1 | Bracket | support | Winkel | grampo | grampa |
| 9 | [1]1903693 | 1 | Bracket | support | Winkel | grampo | grampa |
| 10 | [2]1904874 | 1 | Hose | tuyau flexible | Schlauch | mangueira | manguera |
| 11 | 1904880 | 1 | Hose | tuyau flexible | Schlauch | mangueira | manguera |
| 12 | [4]1905644 | 1 | Guard | protecteur | Schutz | proteção | protector |
| 13 | 1906183 | 1 | Fuel tank | réservoir carburant | Kraftstofftank | tanque combustível | tanque combustible |
| 14 | 1906829 | 1 | Strainer | tamis | Sieb | coador | tamiz |
| 15 | 1915174 | 1 | Hose | tuyau flexible | Schlauch | mangueira | manguera |
| 16 | 1915436 | 1 | Cap&Dipstick | bouch&régl-jauge | Kappe&Tauchstab | tampa e vareta | tapa y var |
| 17 | [3]1919122 | 1 | Fuel tank | réservoir carburant | Kraftstofftank | tanque combustível | tanque combustible |
| 18 | 1990900 | 1 | Gasket | garniture | Dichtung | gaxeta | empaquetadura |
| 19 | 1990901 | 1 | Gasket | garniture | Dichtung | gaxeta | empaquetadura |
| 20 | 17C000620 | 2 | Bolt | boulon | Bolzen | parafuso | bulón |
| 21 | 17D000009 | 3 | Nut | écrou | Mutter | porca | tuerca |
| 22 | [2]17F000003 | 1 | Fitting | ajustage | Verbindung | ajuste | accesorio |
| 23 | 17K000007 | 1 | Elbow | coude | Winkelrohr | cotovêlo | codo |
| 24 | 18C000612 | 6 | Bolt | boulon | Bolzen | parafuso | bulón |
| 25 | [2]19F000002 | 1 | Fitting | ajustage | Verbindung | ajuste | accesorio |
| 26 | 24E000006 | 6 | Lockwasher | rondelle frein | Sicherungsscheibe | arruela de pressão | arandela seguridad |
| 27 | 24F000005 | 2 | Lockwasher | rondelle frein | Sicherungsscheibe | arruela de pressão | arandela seguridad |
| 28 | 27E000010 | 1 | Washer | rondelle | Scheibe | arruela | arandela |
| 29 | 25F000002 | 1 | Fitting | ajustage | Verbindung | ajuste | accesorio |
| 30 | 25K040428 | 1 | O-ring | joint torique | O Ring | anel-O | anillo-O |
| 31 | 36F000003 | 1 | Adapter | adaptateur | Zwischenstück | adaptador | adaptador |
| 32 | 38F000007 | 1 | Elbow | coude | Winkelrohr | cotovêlo | codo |
| 33 | 72F000004 | 1 | Draincock | robinet vidange | Abflusshahn | torneira purga | grifo purga |
| 34 | 1901502 | 1 | Valve | soupape | Ventil | válvula | válvula |
| 35 | 1919500 | 1 | Cap | chapeau | Kappe | tampa | tapa |
| 36 | [3]17C001048 | 3 | Bolt | boulon | Bolzen | parafuso | bulón |
| 37 | 17C001032 | 3 | Bolt | boulon | Bolzen | parafuso | bulón |
| 38 | [3]17C001036 | 3 | Bolt | boulon | Bolzen | parafuso | bulón |

[1] □500D-101➡835-CAC

[2] □500E-101➡1080-CAC

[3] □516A-101-CAC&➡

[4] □500D-101➡1000-CAC

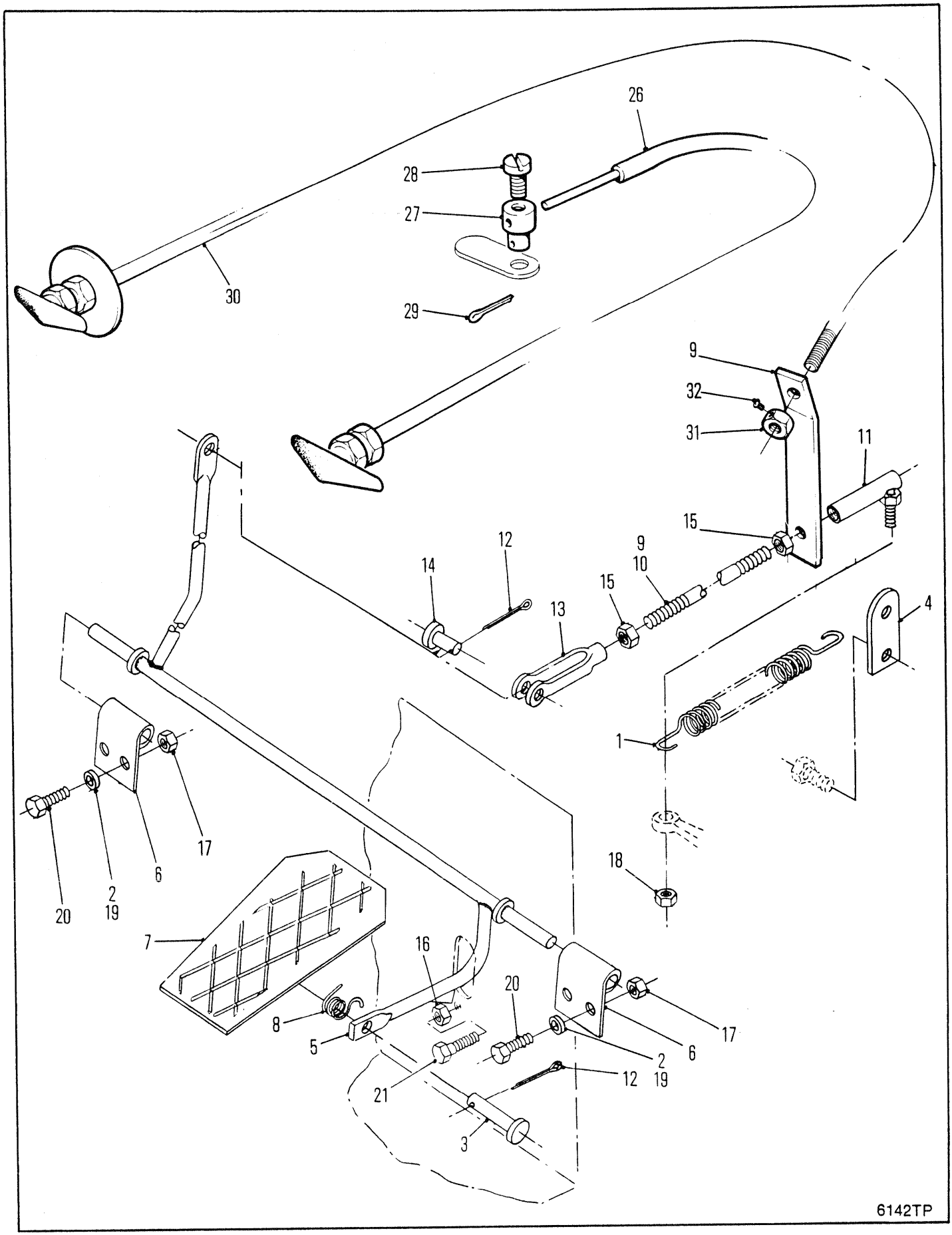
26
28
27
30
29
9
32
31
11
15
12
14
9
10
15
13
4
1
18
17
6
2
19
20
7
16
20
8
5
17
6
2
19
12
21
3
6142TP

## ACCELERATOR & LINKAGE
## ACCÉLÉRATEUR ET TRINGLERIE
## BESCHLEUNIGUNGS-FUSSHEBEL UND GESTÄNGE
## ACELERADOR E ARTICULAÇÃO
## ACELERADOR & CONEXIÓN

| No. | Part No. | Qty | Description | Description | Benennung | Descrição | Descripción |
|---|---|---|---|---|---|---|---|
| 1 | **551090** | 1 | Spring | ressort | Feder | mola | resorte |
| 2 | [1]**619018** | 4 | Washer | rondelle | Scheibe | arruela | arandela |
| 3 | **894831** | 1 | Pin | goupille | Stift | pino | pasador |
| 4 | **1900609** | 1 | Lug | point de soudure | Ansatz | alça | orejo de soporte |
| 5 | **1900873** | 1 | Arm | bras | Arm | braço | brazo |
| 6 | **1900875** | 3 | Bracket | support | Winkel | grampo | grampa |
| 7 | **1900876** | 1 | Pedal | pédale | Pedal | pedal | pedal |
| 8 | **1901081** | 1 | Spring | ressort | Feder | mola | resorte |
| 9 | **531905** | 1 | Plate | plaque | Platte | placa | placa |
| 10 | **1902326** | 1 | Rod | tige | Stange | varão | varilla |
| 11 | **2520346** | 1 | Ball joint | rotule | Kugelgelenk | articulação esf | articulación esf |
| 12 | **1F0000310** | 2 | Pin | goupille | Stift | pino | pasador |
| 13 | **2J0005204** | 1 | Clevis | étrier | Schkel | garfo | horquilla |
| 14 | **4F0005062** | 1 | Pin | goupille | Stift | pino | pasador |
| 15 | **8D0000005** | 2 | Nut | écrou | Mutter | porca | tuerca |
| 16 | **8D0000008** | 1 | Nut | écrou | Mutter | porca | tuerca |
| 17 | **60D000004** | 4 | Nut | écrou | Mutter | porca | tuerca |
| 18 | **18D000005** | 1 | Nut | écrou | Mutter | porca | tuerca |
| 19 | [1]**25E000013** | 6 | Washer | rondelle | Scheibe | arruela | arandela |
| 20 | **18C000412** | 2 | Bolt | boulon | Bolzen | parafuso | bulón |
| 21 | **18C000832** | 1 | Bolt | boulon | Bolzen | parafuso | bulón |
| 22 | †☒**1900759** | 1 | Cable assy | ens câble | Kabel vollst | conjunto do cabo | conjunto de cable |
| 23 | †☒**1930580** | 1 | Bracket | support | Winkel | grampo | grampa |
| 24 | †☒**1523210** | 1 | Connector | raccord | Verbindungsstück | ligador | conector |
| 25 | †☒**85G000806** | 1 | Screw | vis | Schraube | parafuso | tornillo |
| 26 | **1520193** | 1 | Eng stop cable | cable arrêt moteur | Motorabstellkabel | fio parada motor | cable parada motor |
| 27 | **1523209** | 1 | Connector | raccord | Verbindungsstück | ligador | conector |
| 28 | **86G001008** | 1 | Screw | vis | Schraube | parafuso | tornillo |
| 29 | **1F0000208** | 1 | Cotter pin | goupille fendue | Splint | contrapino | chaveta dos patos |
| 30 | **1520190** | 1 | Emgy stop cable | cable arrêt urgence | Notabstellkabel | cabo parada emergn | cable parada emergn |
| 31 | **1523210** | 1 | Connector | raccord | Verbindungsstück | ligador | conector |
| 32 | **85G000806** | 1 | Screw | vis | Schraube | parafuso | tornillo |
| 33 | **531905** | 1 | Plate | plaque | Platte | placa | placa |

[1] □515A-101-CAC&→

666GM 513E-101-CAC→513G-9999-CAC
666GMGR 515A-101-CAC→515A-9999-CAC

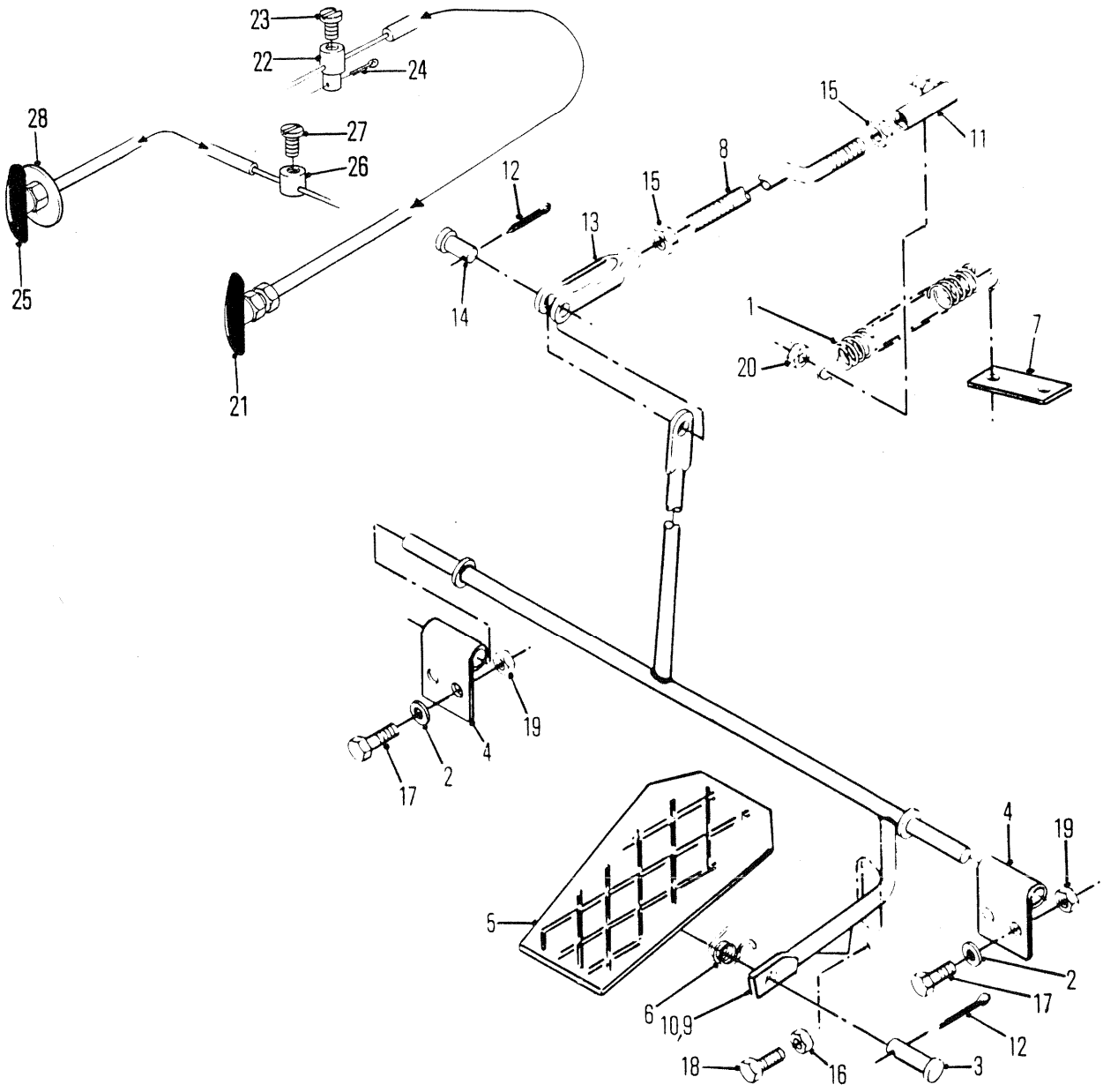
23
22
24
28
27
26
25
21
12
14
13
15
8
15
11
1
20
7
19
4
17
2
5
6
10,9
18
16
3
4
19
2
17
12
5657TP

# ACCELERATOR & LINKAGE
# ACCÉLÉRATEUR ET TRINGLERIE
# BESCHLEUNIGUNGS-FUSSHEBEL UND GESTÄNGE
# ACELERADOR E ARTICULAÇÃO
# ACELERADOR & CONEXIÓN

| No. | Part No. | Qty | Description | Description | Benennung | Descrição | Descripción |
|---|---|---|---|---|---|---|---|
| 1 | **551090** | 1 | Spring | ressort | Feder | mola | resorte |
| 2 | **619018** | 4 | Washer | rondelle | Scheibe | arruela | arandela |
| 3 | **894831** | 1 | Pin | goupille | Stift | pino | pasador |
| 4 | **1900875** | 2 | Bracket | support | Winkel | grampo | grampa |
| 5 | **1900876** | 1 | Pedal | pédale | Pedal | pedal | pedal |
| 6 | **1901081** | 1 | Spring | ressort | Feder | mola | resorte |
| 7 | **1902178** | 1 | Lug | point de soudure | Ansatz | alça | orejo de soporte |
| 8 | **1902314** | 1 | Rod | tige | Stange | varão | varilla |
| 9 | [1]**1902315** | 1 | Arm | bras | Arm | braço | brazo |
| 10 | **1907881** | 1 | Arm | bras | Arm | braço | brazo |
| 11 | **2520346** | 1 | Ball joint | rotule | Kugelgelenk | articulação esf | articulación esf |
| 12 | **1F0000310** | 2 | Pin | goupille | Stift | pino | pasador |
| 13 | **2J0005204** | 1 | Clevis | étrier | Schkel | garfo | horquilla |
| 14 | **4F0005062** | 1 | Pin | goupille | Stift | pino | pasador |
| 15 | **8D0000005** | 2 | Nut | écrou | Mutter | porca | tuerca |
| 16 | **8D0000008** | 1 | Nut | écrou | Mutter | porca | tuerca |
| 17 | **18C000412** | 4 | Bolt | boulon | Bolzen | parafuso | bulón |
| 18 | **18C000832** | 1 | Bolt | boulon | Bolzen | parafuso | bulón |
| 19 | **18D000004** | 4 | Nut | écrou | Mutter | porca | tuerca |
| 20 | **18D000005** | 1 | Nut | écrou | Mutter | porca | tuerca |
| 21 | [2]**1520193** | 1 | Eng stop cable | cable arrêt moteur | Motorabstellkabel | fio parada motor | cable parada motor |
| 22 | [2]**1523209** | 1 | Connector | raccord | Verbindungsstück | ligador | conector |
| 23 | [2]**86G001008** | 1 | Screw | vis | Schraube | parafuso | tornillo |
| 24 | [2]**1F0000208** | 1 | Cotter pin | goupille fendue | Splint | contrapino | chaveta dos patos |
| 25 | [2]**1520190** | 1 | Emgy stop cable | cable arrêt urgence | Notabstellkabel | cabo parada emergn | cable parada emergn |
| 26 | [2]**1523210** | 1 | Connector | raccord | Verbindungsstück | ligador | conector |
| 27 | [2]**85G000806** | 1 | Screw | vis | Schraube | parafuso | tornillo |
| 28 | [2]**531905** | 1 | Plate | plaque | Platte | placa | placa |

[1] □500D-101➡1222-CAC

[2] □500E-101-CAC➡500F-9999-CAC

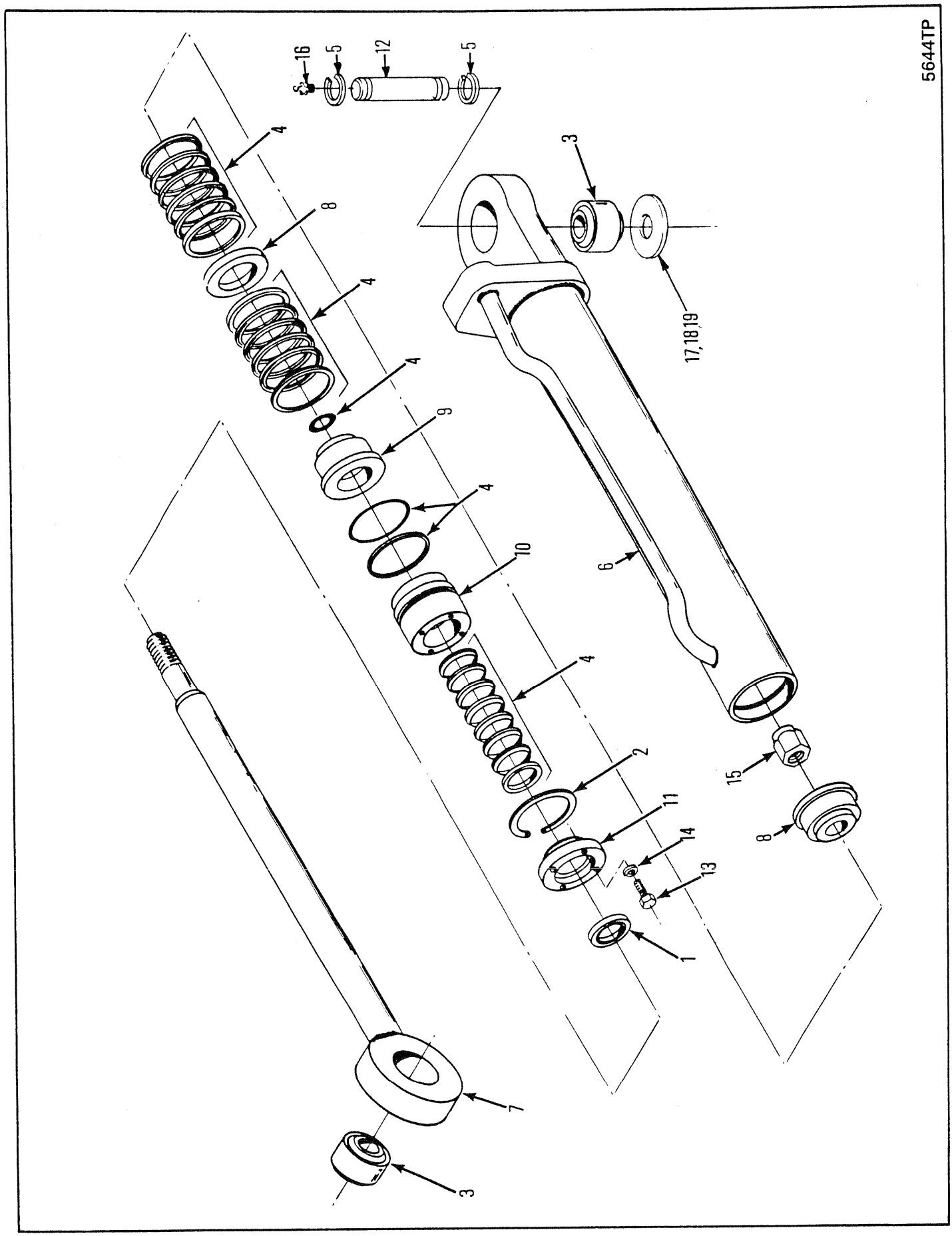
5644TP
16
5
12
5
4
8
4
4
9
4
10
4
2
11
14
13
1
7
3
3
17,18,19
6
15
8

# STEER & BLADE CYLINDER ASSEMBLY
# ENSEMBLE CYLINDRE, DIRECTION ET LAME
# ZYLINDEREINHEIT, STEUER & KLINGE
# CONJUNTO DE CILINDRO, DIREÇÃO E LÂMINA
# CONJUNTO DE CILINDRO DIRECCION Y CUCHILLA

| No. | Part No. | Qty | Description | Description | Benennung | Descrição | Descripción |
|---|---|---|---|---|---|---|---|
| A | [1]1900220 | 1 | Cylinder | cylindre | Zylinder | cilindro | cilindro esclavo |
| B | [2]1991084 | 1 | Seal kit | joint étan trse | Dichtungssatz | vedador jôgo | sello juego |
| 1 | 562783 | 1 | Seal | joint étanchéité | Dichtung | vedador | sello |
| 2 | 711022 | 1 | Ring | anneau | Ring | anel | anillo |
| 3 | 1574466 | 2 | Bushing | chemise | Buchse | bucha | buje |
| 4 | 1900205 | 1 | Packing set | ens demballage | Verpackungssatz | conj de embalagem | juego empaq |
| 5 | 224106 | 4 | Ring retaining | bague darrêt | Haltering | anel retentor | anillo de retención |
| 6 | 1900221 | 1 | Cylinder & Base | cylinder et base | Zylinder & Basis | cilindro e base | cilindro y base |
| 7 | 1900222 | 1 | Rod | tige | Stange | varão | varilla |
| 8 | 1900223 | 2 | Washer | rondelle | Scheibe | arruela | arandela |
| 9 | 1900224 | 1 | Piston | piston | Kolben | pistão | pistón |
| 10 | 1900225 | 1 | Head | culasse | Kopf | cabeça | cabeza |
| 11 | 1900226 | 1 | Retainer | arrêtoir | Halterung | retentor | retén |
| 12 | 1915222 | 2 | Pin | goupille | Stift | pino | pasador |
| 13 | 17C000516 | 4 | Bolt | boulon | Bolzen | parafuso | bulón |
| 14 | 24E000005 | 4 | Lockwasher | rondelle frein | Sicherungsscheibe | arruela de pressão | arandela seguridad |
| 15 | 67D000020 | 1 | Nut | écrou | Mutter | porca | tuerca |
| 16 | 10H000025 | 2 | Grease fitting | graisseur | Nippel Schmier | graxeira | grasera |
| 17 | 1900167 | 2 | Washer | rondelle | Scheibe | arruela | arandela |
| 18 | ‡1900168 | - | Washer | rondelle | Scheibe | arruela | arandela |
| 19 | ‡1901079 | - | Shim | cale | Beilage | calço | planchita |

[1] Inc 1, 2, 4, 6➞11 & 13➞15

[2] Inc 1, 2 & 4

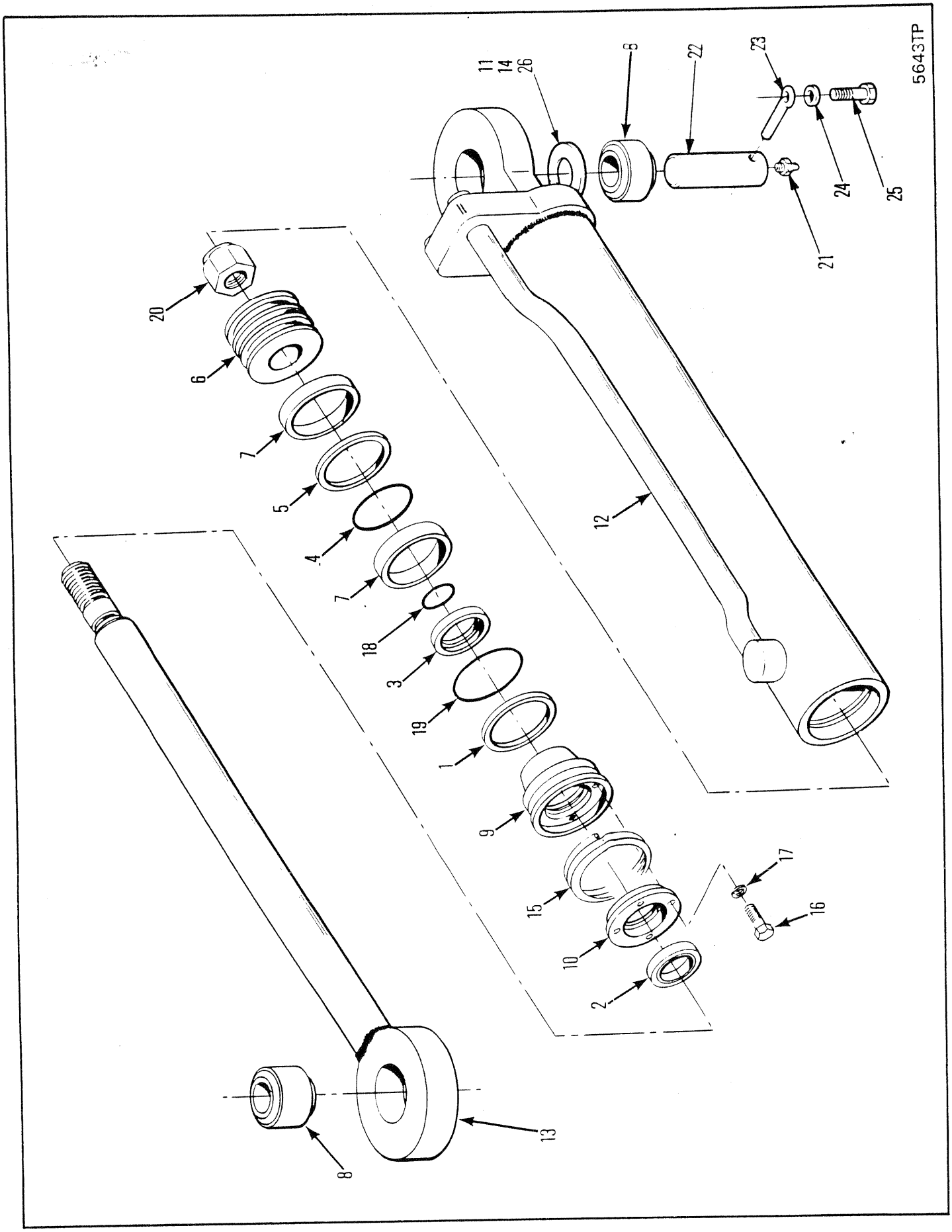
5643TP
11
14
26
8
22
23
24
25
21
12
20
6
7
5
4
7
18
3
19
1
9
15
10
2
17
16
13
8

# STEER & BLADE CYLINDER ASSEMBLY
# ENSEMBLE CYLINDRE, DIRECTION ET LAME
# ZYLINDEREINHEIT, STEUER & KLINGE
# CONJUNTO DE CILINDRO, DIREÇÃO E LÂMINA
# CONJUNTO DE CILINDRO DIRECCION Y CUCHILLA

| No. | Part No. | Qty | Description | Description | Benennung | Descrição | Descripción |
|---|---|---|---|---|---|---|---|
| A | 1904674 | 1 | Cylinder assy | ens cylindre | Zylinderheit | conj de cilindro | conj de cilindro |
| B | [1]1991086 | 1 | Seal kit | joint étan trse | Dichtungssatz | vedador jôgo | sello juego |
| 1 | 532917 | 1 | Ring | anneau | Ring | anel | anillo |
| 2 | 562783 | 1 | Wiper | racleur | Wischer | limpador | limpiador |
| 3 | 713678 | 1 | Ring | anneau | Ring | anel | anillo |
| 4 | 1503629 | 1 | Ring | anneau | Ring | anel | anillo |
| 5 | 2553205 | 1 | Ring | anneau | Ring | anel | anillo |
| 6 | 1503639 | 1 | Washer | rondelle | Scheibe | arruela | arandela |
| 7 | 1530264 | 2 | Ring | anneau | Ring | anel | anillo |
| 8 | 1574466 | 2 | Bushing | chemise | Buchse | bucha | buje |
| 9 | [2]1928845 | 1 | Cap | chapeau | Kappe | tampa | tapa |
| 10 | 1902769 | 1 | Ring | anneau | Ring | anel | anillo |
| 11 | 1905399 | 8 | Washer | rondelle | Scheibe | arruela | arandela |
| 12 | 1905003 | 1 | Tube & base | conduite et base | Rohr & Basis | tubo e base | tubo y base |
| 13 | 1905005 | 1 | Rod | tige | Stange | varão | varilla |
| 14 | ‡1901079 | - | Shim | cale | Beilage | calço | planchita |
| 15 | 2506407 | 1 | Ring | anneau | Ring | anel | anillo |
| 16 | 17C000516 | 3 | Bolt | boulon | Bolzen | parafuso | bulón |
| 17 | 24E000005 | 3 | Lockwasher | rondelle frein | Sicherungsscheibe | arruela de pressão | arandela seguridad |
| 18 | 25K040104 | 1 | O-ring | joint torique | O Ring | anel-O | anillo-O |
| 19 | 25K040308 | 1 | O-ring | joint torique | O Ring | anel-O | anillo-O |
| 20 | 67D000020 | 1 | Nut | écrou | Mutter | porca | tuerca |
| 21 | 10H000025 | 2 | Grease fitting | graisseur | Nippel Schmier | graxeira | grasera |
| 22 | 1915205 | 2 | Pin | goupille | Stift | pino | pasador |
| 23 | 586452 | 2 | Lockpin | goupille de blocage | Sperrstift | pino de trava | pasador de seguridad |
| 24 | 24E000008 | 2 | Lockwasher | rondelle frein | Sicherungsscheibe | arruela de pressão | arandela seguridad |
| 25 | 1915786 | 2 | Bolt | boulon | Bolzen | parafuso | bulón |
| 26 | ‡1905398 | - | Shim | cale | Beilage | calço | planchita |

[1] Inc 2➡5, 7, 12, 15, 18 & 19

[2] Ref RSG 286B

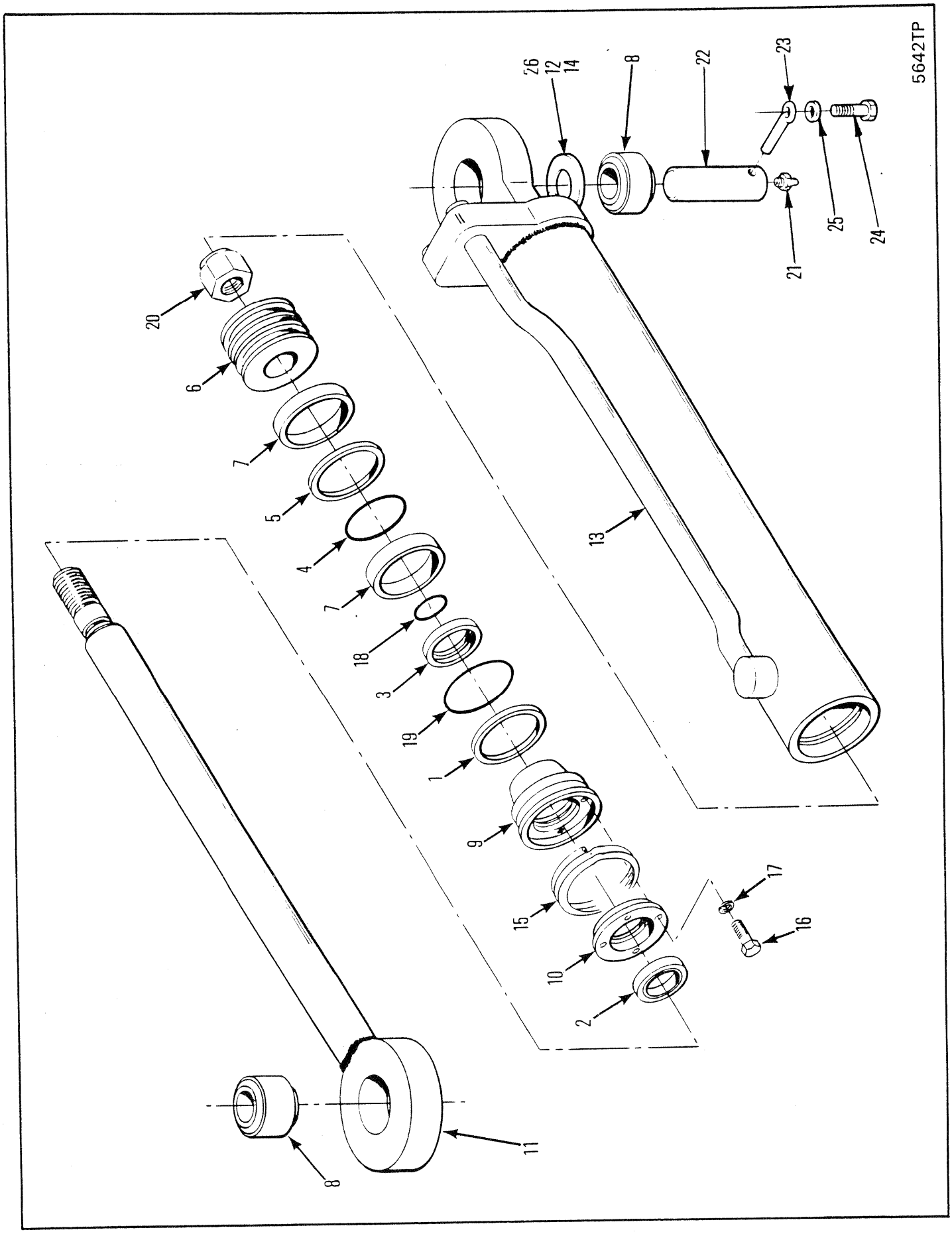
5642TP
26
12
14
8
22
23
25
24
21
20
6
7
5
4
7
18
3
19
1
9
15
10
2
17
16
13
11
8

# STEER & BLADE CYLINDER ASSEMBLY
# ENSEMBLE CYLINDRE, DIRECTION ET LAME
# ZYLINDEREINHEIT, STEUER & KLINGE
# CONJUNTO DE CILINDRO, DIREÇÃO E LÂMINA
# CONJUNTO DE CILINDRO DIRECCION Y CUCHILLA

| No. | Part No. | Qty | Description | Description | Benennung | Descrição | Descripción |
|---|---|---|---|---|---|---|---|
| A | [1,3]1906258 | 1 | Cylinder assy | ens cylindre | Zylinderheit | conj de cilindro | conj de cilindro |
| B | [2]1991086 | 1 | Seal kit | joint étan trse | Dichtungssatz | vedador jôgo | sello juego |
| 1 | 532917 | 1 | Ring | anneau | Ring | anel | anillo |
| 2 | 562783 | 1 | Wiper | racleur | Wischer | limpador | limpiador |
| 3 | 713678 | 1 | Ring | anneau | Ring | anel | anillo |
| 4 | 1503629 | 1 | Ring | anneau | Ring | anel | anillo |
| 5 | 2553205 | 1 | Ring | anneau | Ring | anel | anillo |
| 6 | 1503639 | 1 | Washer | rondelle | Scheibe | arruela | arandela |
| 7 | 1530264 | 2 | Ring | anneau | Ring | anel | anillo |
| 8 | 1574466 | 2 | Bushing | chemise | Buchse | bucha | buje |
| 9 | [3]1928845 | 1 | Cap | chapeau | Kappe | tampa | tapa |
| 10 | 1902769 | 1 | Ring | anneau | Ring | anel | anillo |
| 11 | 1905005 | 1 | Rod | tige | Stange | varão | varilla |
| 12 | 1905399 | 8 | Washer | rondelle | Scheibe | arruela | arandela |
| 13 | 1906259 | 1 | Tube & Base | condutie et base | Rohr & Basis | tubo e base | tube y base |
| 14 | ‡1901079 | - | Shim | cale | Beilage | calço | planchita |
| 15 | 2506407 | 1 | Ring | anneau | Ring | anel | anillo |
| 16 | 17C000516 | 3 | Bolt | boulon | Bolzen | parafuso | bulón |
| 17 | 24E000005 | 3 | Lockwasher | rondelle frein | Sicherungsscheibe | arruela de pressão | arandela seguridad |
| 18 | 25K040104 | 1 | O-ring | joint torique | O Ring | anel-O | anillo-O |
| 19 | 25K040308 | 1 | O-ring | joint torique | O Ring | anel-O | anillo-O |
| 20 | 67D000020 | 1 | Nut | écrou | Mutter | porca | tuerca |
| 21 | 10H000025 | 1 | Grease fitting | graisseur | Nippel Schmier | graxeira | grasera |
| 22 | 1915205 | 2 | Pin | goupille | Stift | pino | pasador |
| 23 | 586452 | 2 | Lockpin | goupille de blocage | Sperrstift | pino de trava | pasador de seguridad |
| 24 | 1915786 | 2 | Bolt | boulon | Bolzen | parafuso | bulón |
| 25 | 24E000008 | 2 | Lockwasher | rondelle frein | Sicherungsscheibe | arruela de pressão | arandela seguridad |
| 26 | ‡1905398 | - | Shim | cale | Beilage | calço | planchita |

[1] Inc 1➞7, 9➞11, 13, 15➞20

[2] Inc 1➞5, 7, 15, 18 & 19

[3] Ref RSG 286B

| | |
|---|---|
| 666CUM | 500D-846-CAC➞500G-9999-CAC |
| 666GM | 513E-101-CAC➞513G-9999-CAC |
| 666GMGR | 515A-101-CAC➞515A-9999-CAC |

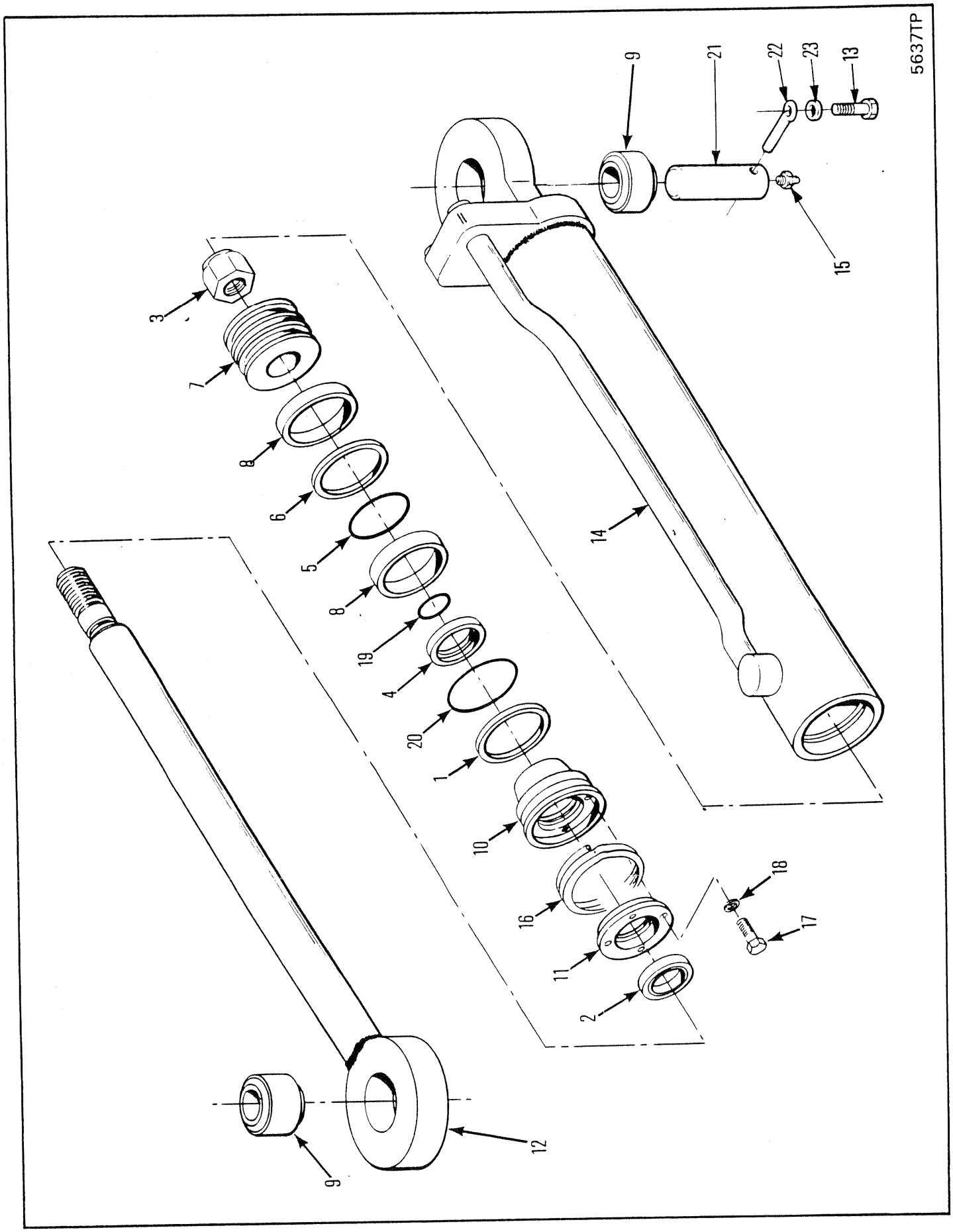
5637TP
9
21
22
23
13
15
14
3
7
8
6
5
8
19
4
20
1
10
16
11
2
18
17
12
9

# ARCH CYLINDER ASSEMBLY
# ROULEAU D'ARC
# BOGEN, BAUGRUPPE
# CONJUNTO DE ARCO
# CONJUNTO DE ARCO

| No. | Part No. | Qty | Description | Description | Benennung | Descrição | Descripción |
|---|---|---|---|---|---|---|---|
| A | [1]1906258 | 1 | Cylinder assy | ens cylindre | Zylinderheit | conj de cilindro | conj de cilindro |
| B | [2]1991086 | 1 | Seal kit | joint étan trse | Dichtungssatz | vedador jôgo | sello juego |
| 1 | 532917 | 1 | Ring | anneau | Ring | anel | anillo |
| 2 | 562783 | 1 | Wiper ring | anneau de came | Wischerring | anello limpador | anillo restregador |
| 3 | 67D000020 | 1 | Nut | écrou | Mutter | porca | tuerca |
| 4 | 713678 | 1 | Ring | anneau | Ring | anel | anillo |
| 5 | 1503629 | 1 | Ring | anneau | Ring | anel | anillo |
| 6 | 2553205 | 1 | Ring | anneau | Ring | anel | anillo |
| 7 | 1503639 | 1 | Washer | rondelle | Scheibe | arruela | arandela |
| 8 | 1530264 | 2 | Ring | anneau | Ring | anel | anillo |
| 9 | 1574466 | 2 | Bushing | chemise | Buchse | bucha | buje |
| 10 | [3]1928845 | 1 | Cap | chapeau | Kappe | tampa | tapa |
| 11 | 1902769 | 1 | Ring | anneau | Ring | anel | anillo |
| 12 | 1905005 | 1 | Rod | tige | Stange | varão | varilla |
| 13 | 17C000820 | 1 | Bolt | boulon | Bolzen | parafuso | bulón |
| 14 | 1906259 | 1 | Tube & base | conduite et base | Rohr & Basis | tubo e base | tubo y base |
| 15 | 10H000025 | 1 | Grease fitting | graisseur | Nippel Schmier | graxeira | grasera |
| 16 | 2506407 | 1 | Ring | anneau | Ring | anel | anillo |
| 17 | 17C000516 | 3 | Bolt | boulon | Bolzen | parafuso | bulón |
| 18 | 24E000005 | 3 | Lockwasher | rondelle frein | Sicherungsscheibe | arruela de pressão | arandela seguridad |
| 19 | 25K040104 | 1 | O-ring | joint torique | O Ring | anel-O | anillo-O |
| 20 | 25K040308 | 1 | O-ring | joint torique | O Ring | anel-O | anillo-O |
| 21 | 1907252 | 1 | Pin | goupille | Stift | pino | pasador |
| 22 | 586452 | 1 | Lockpin | goupille de blocage | Sperrstift | pino de trava | pasador de seguridad |
| 23 | 24E000008 | 1 | Lockwasher | rondelle frein | Sicherungsscheibe | arruela de pressão | arandela seguridad |

[1] Inc 1➡12 & 14➡21

[2] Inc 1, 2, 4➡6, 8, 16, 19 & 20

[3] Ref RSG 286B

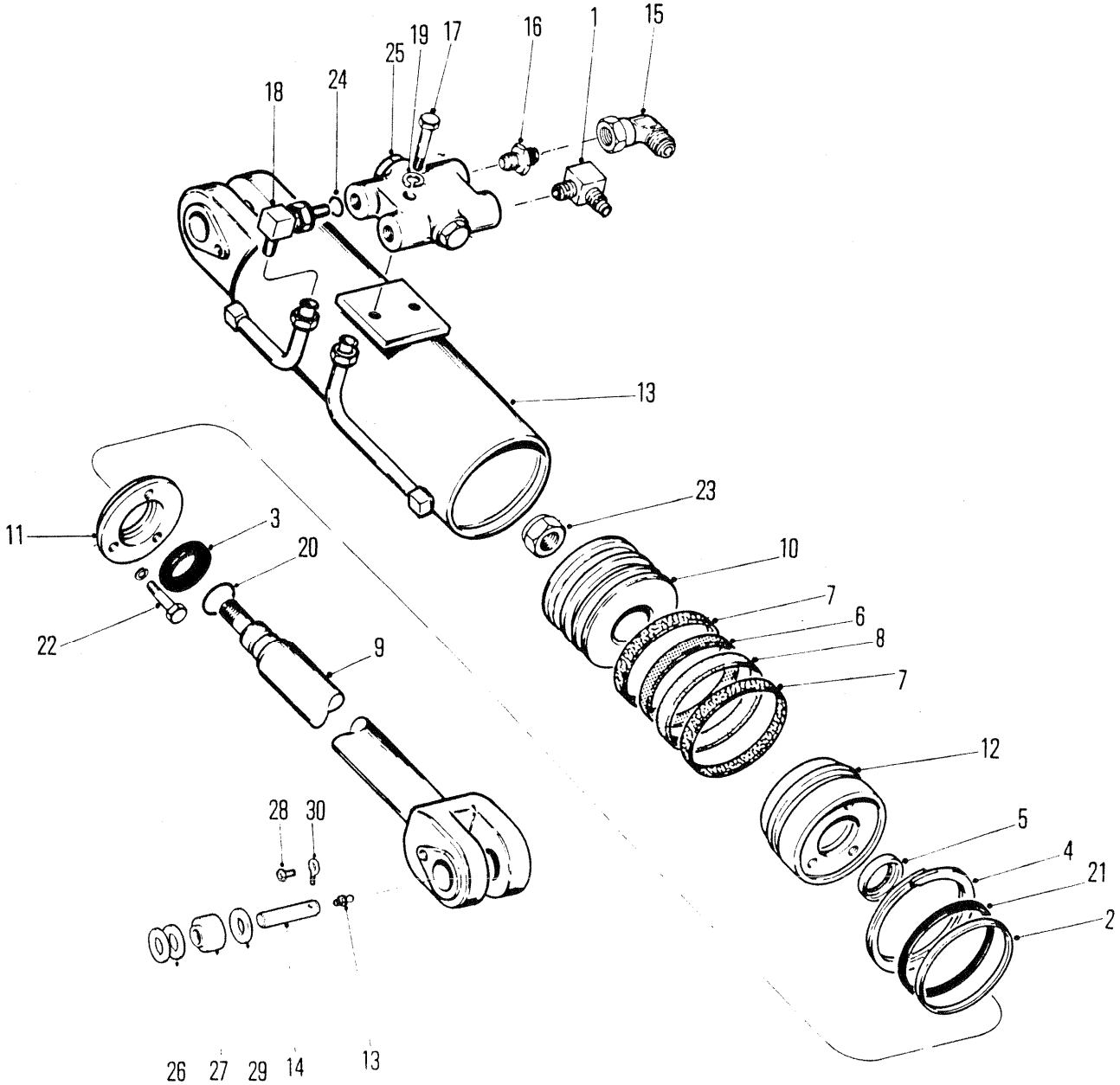
18
24
25
19
17
16
1
15
13
23
11
3
20
10
22
9
7
6
8
7
12
28
30
5
4
21
2
26
27
29
14
13
5635TP

# LOG GRAPPLE CYLINDER ASSEMBLY 70 IN - 1778,0 MM
# ENSEMBLE VÉRIN, GRAPPIN À GRUMES 70 IN - 1778,0 MM
# HOLZGREIFERZYLINDER, VOLLSTÄNDIG 70 IN - 1778,0 MM
# CONJUNTO DO CILINDRO DAS GARRAS 70 IN - 1778,0 MM
# CONJUNTO DE CILINDRO DE LA GARRA PARA TRONCOS 70 IN - 1778,0 MM

| No. | Part No. | Qty | Description | Description | Benennung | Descrição | Descripción |
|---|---|---|---|---|---|---|---|
| A | **1916233** | 2 | Cylinder assy | ens cylindre | Zylinderheit | conj de cilindro | conj de cilindro |
| B | **1564758** | 1 | Seal kit | joint étan trse | Dichtungssatz | vedador jôgo | sello juego |
| 1 | **784568** | 1 | Fitting | ajustage | Verbindung | ajuste | accesorio |
| 2 | **947596** | 1 | Ring | anneau | Ring | anel | anillo |
| 3 | **1300495** | 1 | Wiper ring | anneau de came | Wischerring | anello limpador | anillo restregador |
| 4 | **1302189** | 1 | Ring | anneau | Ring | anel | anillo |
| 5 | **1319227** | 1 | Ring | anneau | Ring | anel | anillo |
| 6 | **1503465** | 1 | Ring | anneau | Ring | anel | anillo |
| 7 | **1536234** | 2 | Ring | anneau | Ring | anel | anillo |
| 8 | **2553209** | 1 | Ring | anneau | Ring | anel | anillo |
| 9 | **1907482** | 1 | Rod | tige | Stange | varão | varilla |
| 10 | **1907485** | 1 | Piston | piston | Kolben | pistão | pistón |
| 11 | **1907486** | 1 | Retainer | arrêtoir | Halterung | retentor | retén |
| 12 | **1907487** | 1 | Cap | chapeau | Kappe | tampa | tapa |
| 13 | **10H000025** | 1 | Grease fitting | graisseur | Nippel Schmier | graxeira | grasera |
| 14 | **1903262** | 1 | Pin | goupille | Stift | pino | pasador |
| 15 | **11K000007** | 1 | Elbow | coude | Winkelrohr | cotovêlo | codo |
| 16 | **15K000007** | 1 | Fitting | ajustage | Verbindung | ajuste | accesorio |
| 17 | **17C000532** | 2 | Bolt | boulon | Bolzen | parafuso | bulón |
| 18 | **17K000007** | 2 | Fitting | ajustage | Verbindung | ajuste | accesorio |
| 19 | **25E000016** | 2 | Washer | rondelle | Scheibe | arruela | arandela |
| 20 | **25K040120** | 1 | O-ring | joint torique | O Ring | anel-O | anillo-O |
| 21 | **25K040424** | 1 | O-ring | joint torique | O Ring | anel-O | anillo-O |
| 22 | **33C000614** | 3 | Bolt | boulon | Bolzen | parafuso | bulón |
| 23 | **67D000024** | 1 | Nut | écrou | Mutter | porca | tuerca |
| 24 | **91F000006** | 2 | O-ring | joint torique | O Ring | anel-O | anillo-O |
| 25 | [1]--------- | 1 | Lockvalve | soupape de sûrete | Sperrventil | válv de techam | valv sello |
| 26 | ‡**1905176** | - | Shim | cale | Beilage | calço | planchita |
| 27 | **1573309** | 1 | Bushing | chemise | Buchse | bucha | buje |
| 28 | **17C000824** | 1 | Bolt | boulon | Bolzen | parafuso | bulón |
| 29 | **1903689** | 1 | Thrust washer | rondelle pouss | Ritzeldruck | arruela empuxo | arandela empuje |
| 30 | **586452** | 1 | Lockpin | goupille de blocage | Sperrstift | pino de trava | pasador de seguridad |

[1] Ref E2 40000

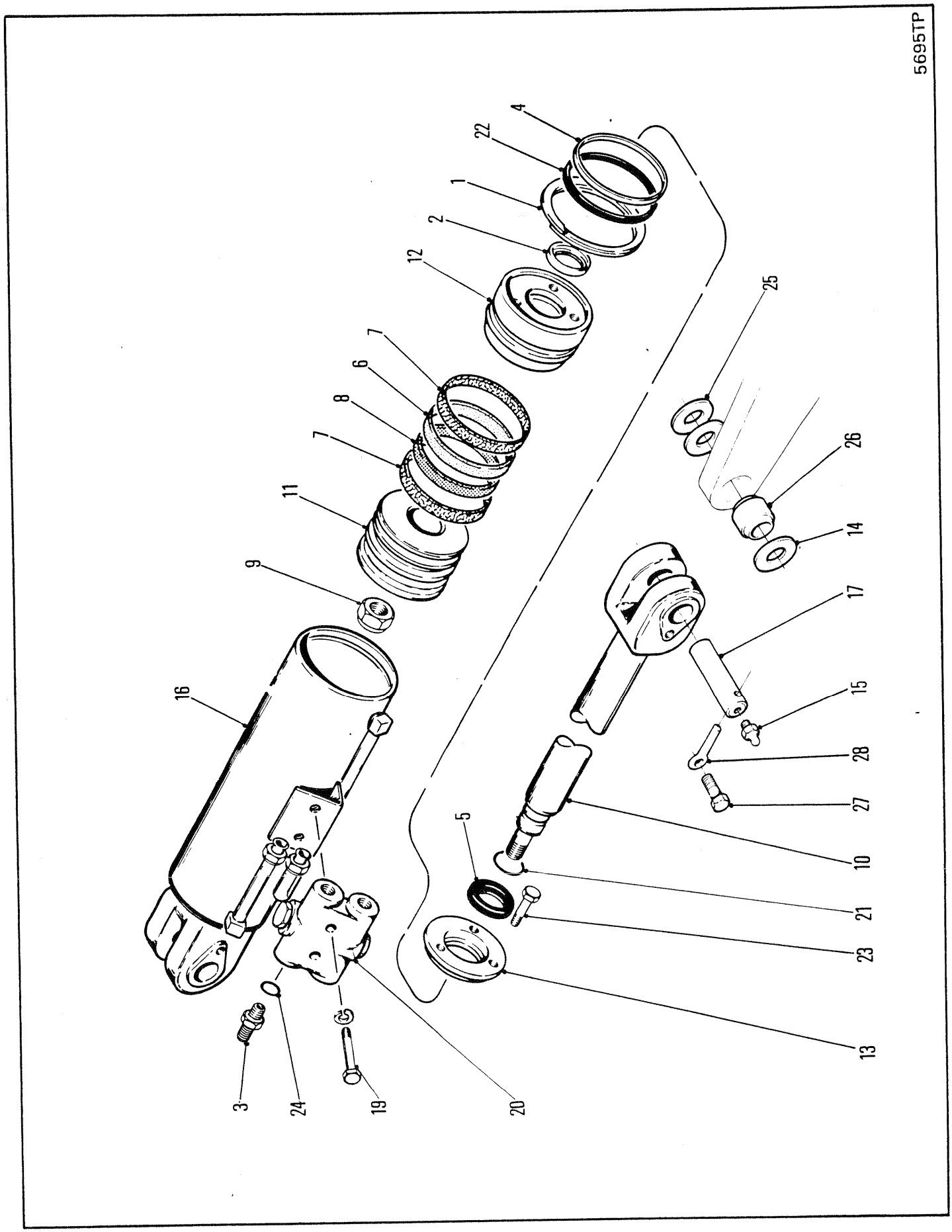
5695TP
1
2
3
4
5
6
7
8
9
10
11
12
13
14
15
16
17
19
20
21
22
23
24
25
26
27
28

# LOG GRAPPLE CYLINDER ASSEMBLY 102 IN - 2590,8 MM
# ENSEMBLE VÉRIN, GRAPPIN À GRUMES 102 IN - 2590,8 MM
# HOLZGREIFERZYLINDER, VOLLSTÄNDIG 102 IN - 2590,8 MM
# CONJUNTO DO CILINDRO DAS GARRAS 102 IN - 2590,8 MM
# CONJUNTO DE CILINDRO DE LA GARRA PARA TRONCOS 102 IN - 2590,8 MM

| No. | Part No. | Qty | Description | Description | Benennung | Descrição | Descripción |
|---|---|---|---|---|---|---|---|
| A | [4,1]1916232 | 1 | Cylinder | cylindre | Zylinder | cilindro | cilindro esclavo |
| B | [3]1991089 | 1 | Seal kit | joint étan trse | Dichtungssatz | vedador jôgo | sello juego |
| 1 | 563377 | 1 | Ring | anneau | Ring | anel | anillo |
| 2 | 713513 | 1 | Ring | anneau | Ring | anel | anillo |
| 3 | 730963 | 2 | Fitting | ajustage | Verbindung | ajuste | accesorio |
| 4 | 784431 | 1 | Ring | anneau | Ring | anel | anillo |
| 5 | 1319348 | 1 | Wiper | racleur | Wischer | limpador | limpiador |
| 6 | 1502845 | 1 | Ring | anneau | Ring | anel | anillo |
| 7 | 1503013 | 2 | Ring | anneau | Ring | anel | anillo |
| 8 | 1503467 | 1 | Ring | anneau | Ring | anel | anillo |
| 9 | 1520467 | 1 | Nut | écrou | Mutter | porca | tuerca |
| 10 | 1907570 | 1 | Rod | tige | Stange | varão | varilla |
| 11 | 1907572 | 1 | Piston | piston | Kolben | pistão | pistón |
| 12 | 1907574 | 1 | Cap | chapeau | Kappe | tampa | tapa |
| 13 | 1907576 | 1 | Retainer | arrêtoir | Halterung | retentor | retén |
| 14 | 1903689 | 2 | Washer | rondelle | Scheibe | arruela | arandela |
| 15 | 10H000025 | 2 | Grease fitting | graisseur | Nippel Schmier | graxeira | grasera |
| 16 | 1919370 | 1 | Tube&base assy | ens tube et patin | Rohr & Untergestell | con de tubos e base | conj de tubos y base |
| 17 | 1903262 | 2 | Pin | goupille | Stift | pino | pasador |
| 18 | 15K000007 | 2 | Fitting | ajustage | Verbindung | ajuste | accesorio |
| 19 | 17C000528 | 2 | Bolt | boulon | Bolzen | parafuso | bulón |
| 20 | [2]○--------- | - | Lockvalve | soupape de sûrete | Sperrventil | válv de techam | valv sello |
| 21 | 25K040120 | 1 | O-ring | joint torique | O Ring | anel-O | anillo-O |
| 22 | 25K040524 | 1 | O-ring | joint torique | O Ring | anel-O | anillo-O |
| 23 | 33C000614 | 3 | Bolt | boulon | Bolzen | parafuso | bulón |
| 24 | 91F000006 | 2 | O-ring | joint torique | O Ring | anel-O | anillo-O |
| 25 | ‡1905176 | - | Shim | cale | Beilage | calço | planchita |
| 26 | 1573309 | 1 | Bushing | chemise | Buchse | bucha | buje |
| 27 | 33C000820 | 2 | Bolt | boulon | Bolzen | parafuso | bulón |
| 28 | 586452 | 2 | Lockpin | goupille de blocage | Sperrstift | pino de trava | pasador de seguridad |

[1] Inc 1, 2, 4, 6➟12, 15, 16 & 22

[2] Ref R.S.G. 228

[3] Inc 1, 2, 4➟8, 21 & 22

[4] ⊠664GR, 666GR

666GMGR 515A-101-CAC➟515A-9999-CAC

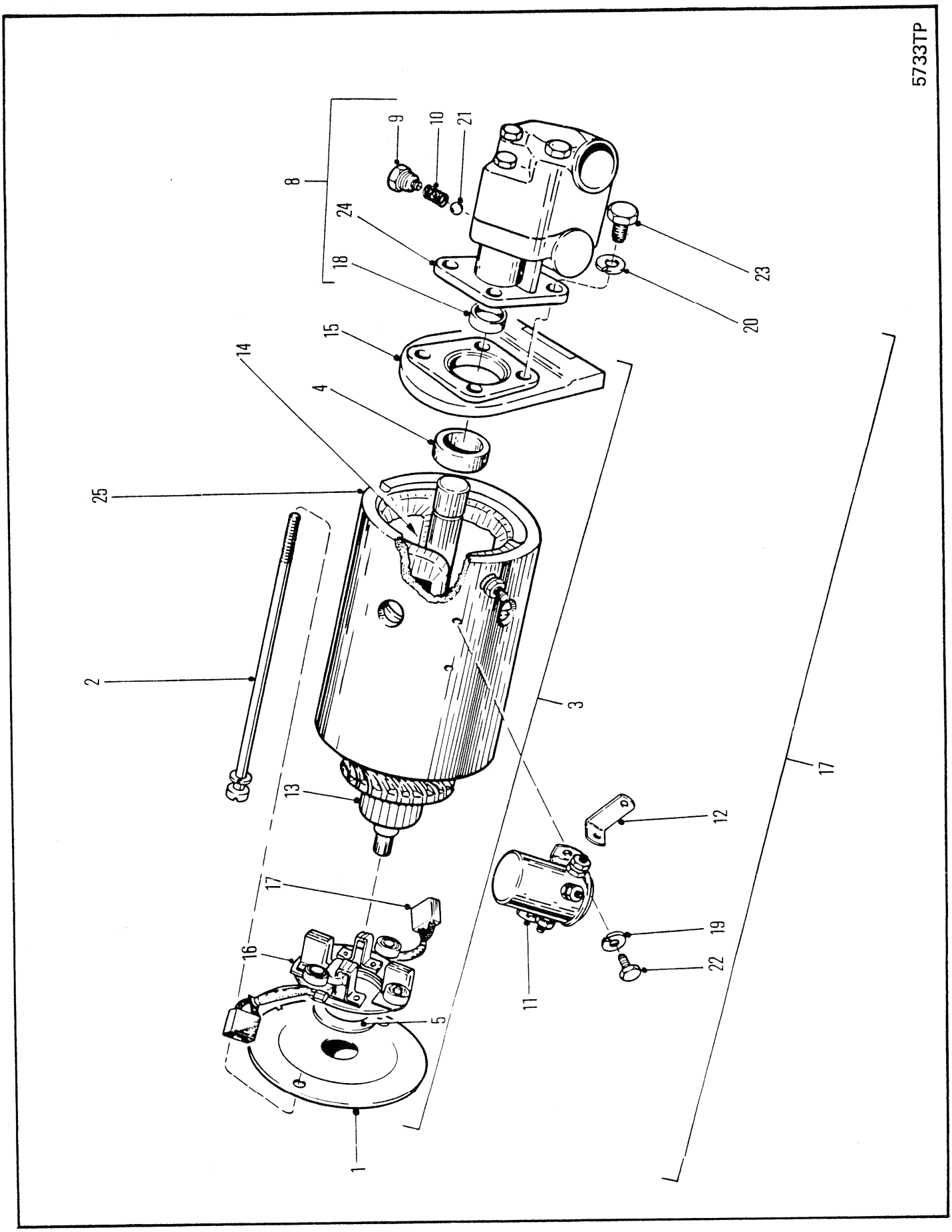
5733TP
1
2
3
4
5
8
9
10
11
12
13
14
15
16
17
18
19
20
21
22
23
24
25

## PUMP & MOTOR ASSEMBLY ⊠
## ENSEMBLE DE POMPE ET DE MOTEUR ⊠
## PUMPEN UND MOTOREN-BAUGRUPPE ⊠
## CONJUNTO DE BOMBA E MOTOR ⊠
## CONJUNTO DE BOMBA Y MOTOR ⊠

| No. | Part No. | Qty | Description | Description | Benennung | Descrição | Descripción |
|---|---|---|---|---|---|---|---|
| 1 | [2]886267 | 1 | Cover assy | couvercle ens | Deckel vollst | tampa conj | tapa conj |
| 2 | 898224 | 2 | Bolt assy | boulon ens | Bolzen vollst | parafuso conj | bulón conj |
| 3 | [1,5]960373 | 1 | Motor assy | ass de moteur | Motoreinheit | conj do motor | conj motor |
| 4 | 990087 | 1 | Bearing | palier | Lager | mancal | cojinete |
| 5 | 992313 | 1 | Washer | rondelle | Scheibe | arruela | arandela |
| 6 | [6]§--------- | - | Housing | botier | Gehuse | carcaça | carcasa |
| 7 | [7]§--------- | - | Housing | botier | Gehuse | carcaça | carcasa |
| 8 | [3,5]1990974 | 1 | Pump assembly | pompe ens | Pumpe vollst | bomba conj | bomba conj |
| 9 | 1990975 | 1 | Plug | bouchon | Stopfen | bujão | tapón |
| 10 | 1990976 | 1 | Spring | ressort | Feder | mola | resorte |
| 11 | 1990977 | 1 | Solenoid | solénoide | Schaltmagnet | solenóide | solenoide |
| 12 | 1990978 | 1 | Strap | bande | Band | faixa | banda |
| 13 | 1990979 | 1 | Armature | induit | Anker | induzido | inducido |
| 14 | 1990980 | 1 | Coil assy | bobine ens | Spule vollst | bobina conj | bobina conj |
| 15 | 1990981 | 1 | Cover | couvercle | Deckel | tampa | tapa |
| 16 | [4]1990982 | 1 | Brush | balai | Bürste | escova | escobilla |
| 17 | 1990983 | 1 | Brush assy | ass de la brosse | Bürsteneinheit | conj de escovas | conj escobilla |
| 18 | 3486395 | 1 | Seal | joint étanchéité | Dichtung | vedador | sello |
| 19 | 4E000004 | 2 | Lockwasher | rondelle frein | Sicherungsscheibe | arruela de pressão | arandela seguridad |
| 20 | 4E000005 | 4 | Lockwasher | rondelle frein | Sicherungsscheibe | arruela de pressão | arandela seguridad |
| 21 | 10J000012 | 1 | Ball | bille | Kugel | esfera | bola |
| 22 | 17C000406 | 2 | Bolt | boulon | Bolzen | parafuso | bulón |
| 23 | 17C000512 | 4 | Bolt | boulon | Bolzen | parafuso | bulón |

[1] Inc 1, 2, 3, 5, 7, 13, 14, 15, 16 & 17

[2] Inc bushing
[2] Comprend chemise
[2] Einschl. Buchse
[2] Incl. bucha
[2] inc. buje

[3] Inc 6, 9, 10, 18, 20, 21 & 23

[4] Inc 17

[5] For pump & motor assy - order 1915351
[5] Pour ens de pompe et de moteur - commander 1915351
[5] Für Pumpen und Motoren Baugruppe - bestelle 1915351
[5] Para conj de bomba et motor - encomendar 1915351
[5] Para conj de bomba y motor - ordenar 1915351

[6] See 8
[6] Voir 8
[6] Siehe 8
[6] Veja 8
[6] Véase 8

[7] See 3
[7] Voir 3
[7] Siehe 3
[7] Veja 3
[7] Véase 3

666CUM 500E-101-CAC→500E-9999-CAC
666GM 513E-101-CAC→513F-9999-CAC

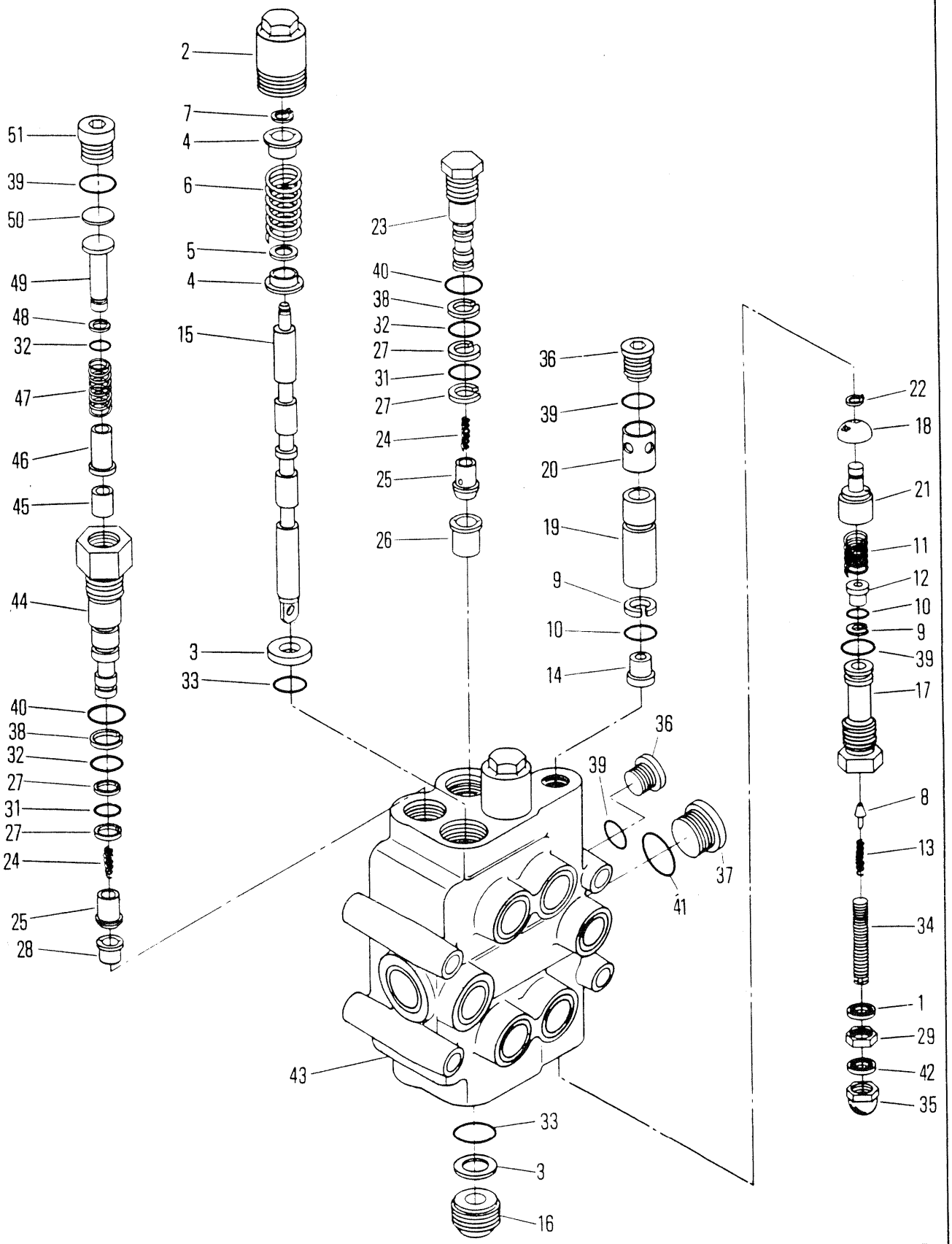
2
7
4
6
5
4
15
3
33
51
39
50
49
48
32
47
46
45
44
40
38
32
27
31
27
24
25
28
23
40
38
32
27
31
27
24
25
26
36
39
20
19
9
10
14
36
39
37
41
43
33
3
16
22
18
21
11
12
10
9
39
17
8
13
34
1
29
42
35
5710TP

# CONTROL VALVE, STEER & BLADE
# SOUPAPE DE CONTRÔLE, LAME & DIRECTION
# STEUERVENTIL, STEUER & KLINGE
# VÁLVULA, DIRÇÃO & LÄMINA
# VÁLVULA DE CONTROL, DIRECCION & CUCHILLA

| No. | Part No. | Qty | Description | Description | Benennung | Descrição | Descripción |
|---|---|---|---|---|---|---|---|
| A | [1]1901538 | 1 | Control valve | soupape de contrôle | Steurventil | válv de contr | valv de control |
| B | [3,4]1990946 | 1 | Relf&ld chk vlv | décharge&charge | ent-&belastung | válv de aliv e carga | válv de aliv y carga |
| C | [3,5]1990947 | 1 | Relf&ld chk vlv | décharge&charge | ent-&belastung | válv de aliv e carga | válv de aliv y carga |
| D | [3,6]1990948 | 1 | Relf&ld chk vlv | décharge&charge | ent-&belastung | válv de aliv e carga | válv de aliv y carga |
| E | [2]1990177 | 1 | Poppet assy | ens clapet | Ventilkegel vollst | gatilho conj | clapeta conj |
| 1 | 730396 | 2 | Seal | joint étanchéité | Dichtung | vedador | sello |
| 2 | §878196 | 2 | Cap | chapeau | Kappe | tampa | tapa |
| 3 | 878231 | 4 | Retainer | arrêtoir | Halterung | retentor | retén |
| 4 | 878232 | 4 | Spacer | entretoise | Distanzteil | espaçador | espaciador |
| 5 | 878233 | 2 | Washer | rondelle | Scheibe | arruela | arandela |
| 6 | 878234 | 2 | Spring | ressort | Feder | mola | resorte |
| 7 | 878235 | 2 | Ring | anneau | Ring | anel | anillo |
| 8 | 883734 | 1 | Plunger | plongeur | Druckstange | embolo | émbolo buzo |
| 9 | 73K000014 | 2 | Ring | anneau | Ring | anel | anillo |
| 10 | 899039 | 2 | O-ring | joint torique | O Ring | anel-O | anillo-O |
| 11 | 944466 | 1 | Spring | ressort | Feder | mola | resorte |
| 12 | 944469 | 1 | Seat | sige | Sitz | assento | asiento |
| 13 | 944471 | 1 | Spring | ressort | Feder | mola | resorte |
| 14 | 944645 | 1 | Seat | sige | Sitz | assento | asiento |
| 15 | §--------- | 2 | Spool | tiroir | Spule | carretel | carrete |
| 16 | 1990173 | 2 | Retainer&Wiper | arrêtoir&balai | Halterung&Wischer | soldada&palheta | limpiador y retén |
| 17 | 1990175 | 1 | Cap | chapeau | Kappe | tampa | tapa |
| 18 | [7]§--------- | 1 | Screen | crible | Sieb | tela | tamiz |
| 19 | 1990178 | 1 | Seat | sige | Sitz | assento | asiento |
| 20 | 1990179 | 1 | Sleeve | manchon | Muffe | luva | manguito |
| 21 | [7]§--------- | 1 | Poppet | clapet | Ventilkegel | gatilho | clapeta |
| 22 | [7]§--------- | 1 | Snap ring | circlips | Sperring | anel de trava | anillo de retención |
| 23 | 1990182 | 2 | Cap | chapeau | Kappe | tampa | tapa |
| 24 | 1990183 | 4 | Spring | ressort | Feder | mola | resorte |
| 25 | 1990184 | 4 | Poppet | clapet | Ventilkegel | gatilho | clapeta |
| 26 | 1990185 | 2 | Seat | sige | Sitz | assento | asiento |
| 27 | 1990186 | 8 | Ring | anneau | Ring | anel | anillo |
| 28 | 1990266 | 2 | Sleeve | manchon | Muffe | luva | manguito |
| 29 | 8D000006 | 1 | Nut | écrou | Mutter | porca | tuerca |
| 30 | †25K020003 | 2 | O-ring | joint torique | O Ring | anel-O | anillo-O |
| 31 | 25K020016 | 4 | O-ring | joint torique | O Ring | anel-O | anillo-O |
| 32 | 25K020018 | 4 | O-ring | joint torique | O Ring | anel-O | anillo-O |
| 33 | 25K030024 | 4 | O-ring | joint torique | O Ring | anel-O | anillo-O |
| 34 | 33G000528 | 1 | Screw | vis | Schraube | parafuso | tornillo |
| 35 | 47D000005 | 1 | Nut | écrou | Mutter | porca | tuerca |
| 36 | 47K000006 | 2 | Plug | bouchon | Stopfen | bujão | tapón |
| 37 | 47K000008 | 2 | Plug | bouchon | Stopfen | bujão | tapón |
| 38 | 73K000015 | 4 | Ring | anneau | Ring | anel | anillo |
| 39 | 91F000006 | 5 | O-ring | joint torique | O Ring | anel-O | anillo-O |
| 40 | 91F000007 | 4 | O-ring | joint torique | O Ring | anel-O | anillo-O |

[1] Inc B,C,D,E, 1➡51

[2] Inc18, 21, 22

[3] Inc18,24,25,27,28,30➡32,38..40,44➡51

[4] 1850 PSI 130.1 Kg Cm²

[5] 1900 PSI 133.2 Kg Cm²

[6] 2200 PSI 154.7 Kg Cm²

[7] See E
[7] Voir E
[7] Siehe E
[7] Veja E
[7] Véase E

666CUM 500D-101-CAC➡500D-9999-CAC

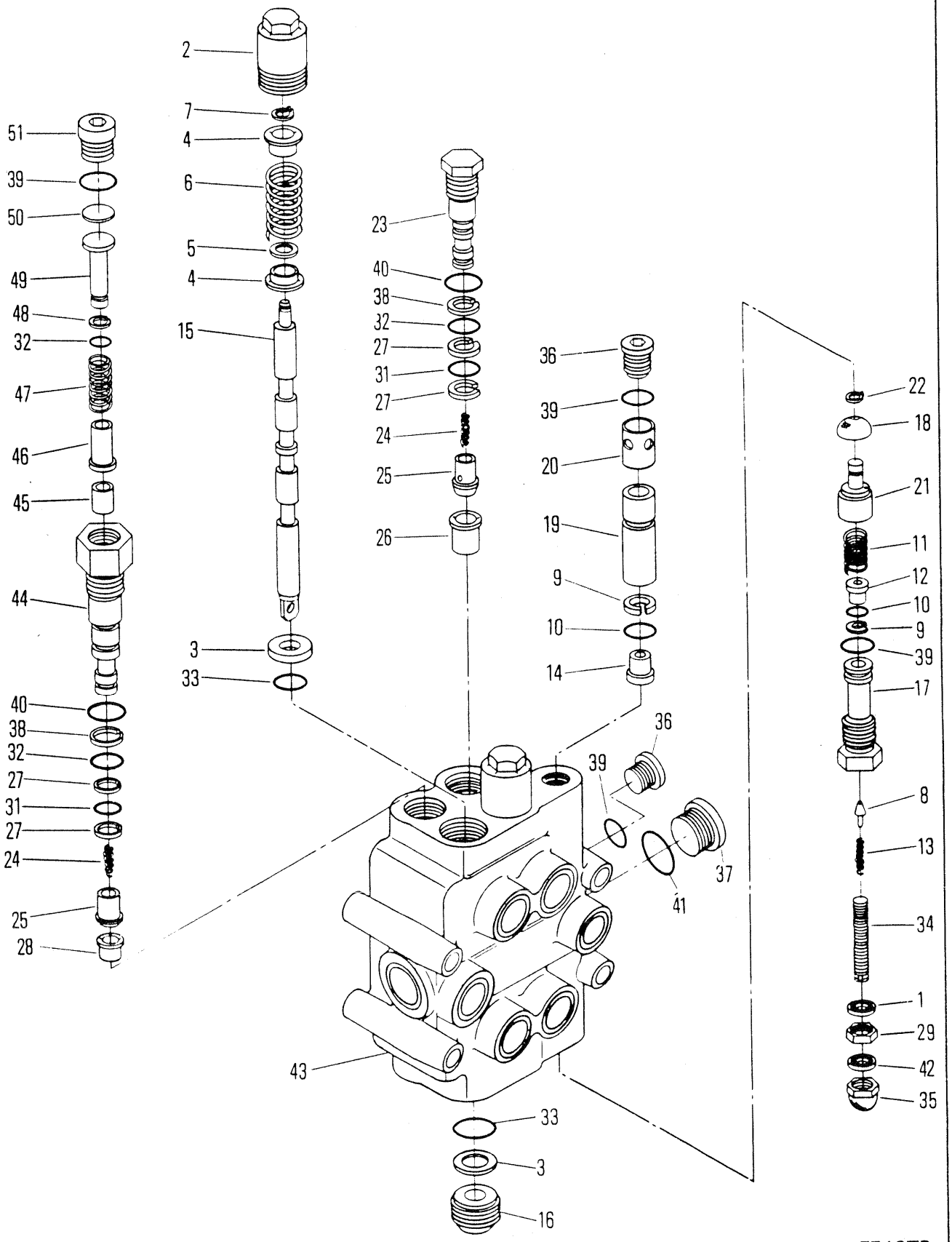
2
7
4
6
5
4
15
3
33
51
39
50
49
48
32
47
46
45
44
40
38
32
27
31
27
24
25
28
23
40
38
32
27
31
27
24
25
26
36
39
20
19
9
10
14
36
39
37
41
43
33
3
16
22
18
21
11
12
10
9
39
17
8
13
34
1
29
42
35
5710TP

# CONTROL VALVE, STEER & BLADE
# SOUPAPE DE CONTRÔLE, LAME & DIRECTION
# STEUERVENTIL, STEUER & KLINGE
# VÁLVULA, DIRÇÃO & LÂMINA
# VÁLVULA DE CONTROL, DIRECCION & CUCHILLA

| No. | Part No. | Qty | Description | Description | Benennung | Descrição | Descripción |
|---|---|---|---|---|---|---|---|
| 41 | **91F000008** | 2 | O-ring | joint torique | O Ring | anel-O | anillo-O |
| 42 | **663792** | 1 | Seal | joint étanchéité | Dichtung | vedador | sello |
| 43 | §--------- | 1 | Casting | pièce en fonte | Gussteil | peça fundida | pieza fundida |
| 44 | §--------- | 2 | Cap | chapeau | Kappe | tampa | tapa |
| 45 | §--------- | 2 | Seat | sige | Sitz | assento | asiento |
| 46 | §--------- | 2 | Plunger | plongeur | Druckstange | embolo | émbolo buzo |
| 47 | §--------- | 2 | Spring | ressort | Feder | mola | resorte |
| 48 | §--------- | 2 | Ring | anneau | Ring | anel | anillo |
| 49 | §--------- | 2 | Guide | guide | Führungsstück | guia | guía |
| 50 | §‡--------- | - | Shim | cale | Beilage | calço | planchita |
| 51 | §--------- | 2 | Plug | bouchon | Stopfen | bujão | tapón |

[1] Inc B,C,D,E, 1➡51

[2] Inc18, 21, 22

[3] Inc18,24,25,27,28,30➡32,38..40,44➡51

[4] 1850 PSI 130.1 Kg Cm²

[5] 1900 PSI 133.2 Kg Cm²

[6] 2200 PSI 154.7 Kg Cm²

[7] See E
[7] Voir E
[7] Siehe E
[7] Veja E
[7] Véase E

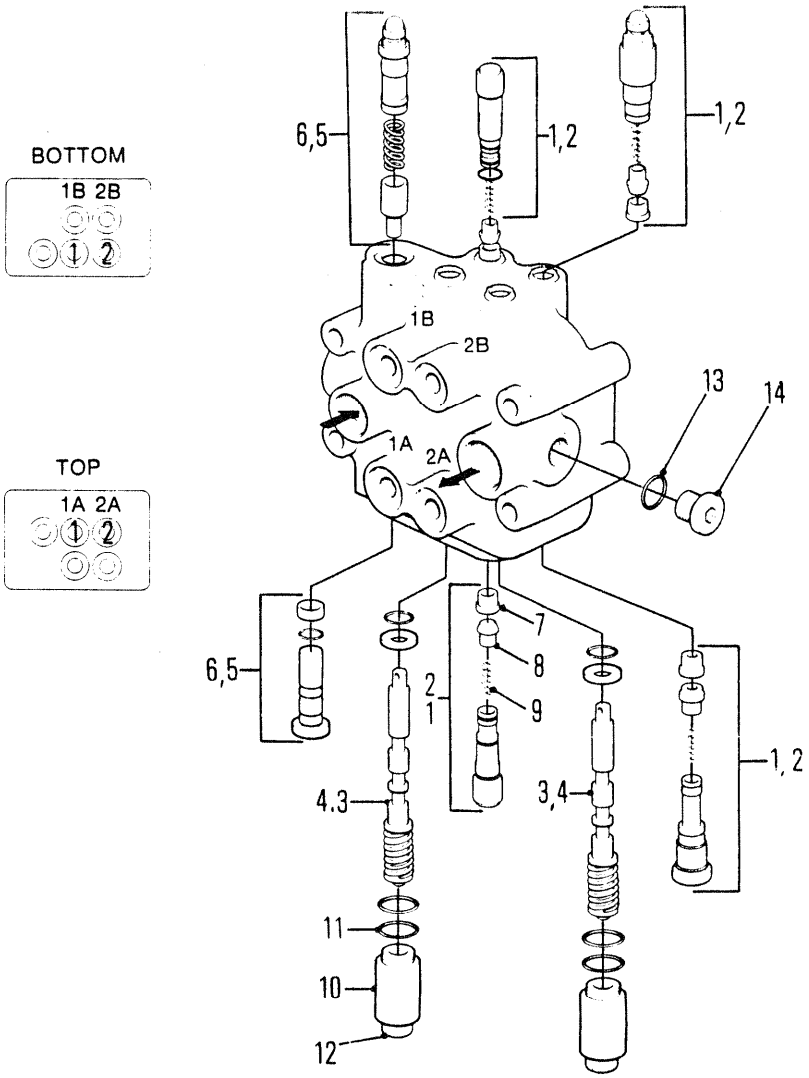


| PORT RELIEF | |
|---|---|
| 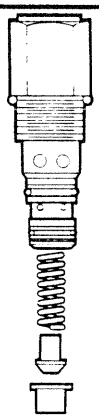 | |
| LOCATION | PSI SETTING |
| 1A | 2050 PSI |
| 1B | 2050 PSI |
| 2A | 2050 PSI |
| 2B | 2050 PSI |

6653TP

## CONTROL VALVE, STEER & BLADE
## SOUPAPE DE CONTRÔLE, LAME ET DIRECTION
## STEUERVENTIL, STEUER UND KLINGE
## VÁLVULA, DIRÇÃO E LÂMINA
## VÁLVULA DE CONTROL, DIRECCION Y CUCHILLA

| No. | Part No. | Qty | Description | Description | Benennung | Descrição | Descripción |
|---|---|---|---|---|---|---|---|
| A | [1]1937427 | 1 | Control valve | soupape de contrôle | Steurventil | válv de contr | valv de control |
| 1 | 1992397 | 4 | Port relief | orifice soup de sûreté | Öffnungsüberdruk | auxílio orifício coletor | auxilio orificio colectr |
| 2 | [2]1992434 | 4 | Seal kit | joint étan trse | Dichtungssatz | vedador jôgo | sello juego |
| 3 | §--------- | 2 | Spool assy | ensemble tiroir | Spule vollst | conjunto carretel | conjunto carrete |
| 4 | 1992435 | 2 | Seal kit | joint étan trse | Dichtungssatz | vedador jôgo | sello juego |
| 5 | 1992391 | 1 | Main relief | soup sûreté principal | Hauptüberdruck | auxílio principal | auxilio principal |
| 6 | 1992457 | 1 | Seal kit | joint étan trse | Dichtungssatz | vedador jôgo | sello juego |
| 7 | 1990266 | 4 | Seat | sige | Sitz | assento | asiento |
| 8 | 1990184 | 4 | Poppet | clapet | Ventilkegel | gatilho | clapeta |
| 9 | 1990183 | 4 | Spring | ressort | Feder | mola | resorte |
| 10 | 1992190 | 2 | Cap | chapeau | Kappe | tampa | tapa |
| 11 | 25K030024 | 2 | O-ring | joint torique | O Ring | anel-O | anillo-O |
| 12 | 1992191 | 2 | Check valve | soupape de sureté | Rückshlagventile | válvula de esbarro | válv retención |
| 13 | 91F000006 | 2 | O-ring | joint torique | O Ring | anel-O | anillo-O |
| 14 | 47K000010 | 2 | Plug | bouchon | Stopfen | bujão | tapón |

[1] Inc 1➡14

[2] □1A, 1B, 2A, 2B

666CUM 500E-101-CAC➡500G-9999-CAC
666GM 513E-101-CAC➡513G-9999-CAC
666GMGR 515A-101-CAC➡515A-9999-CAC

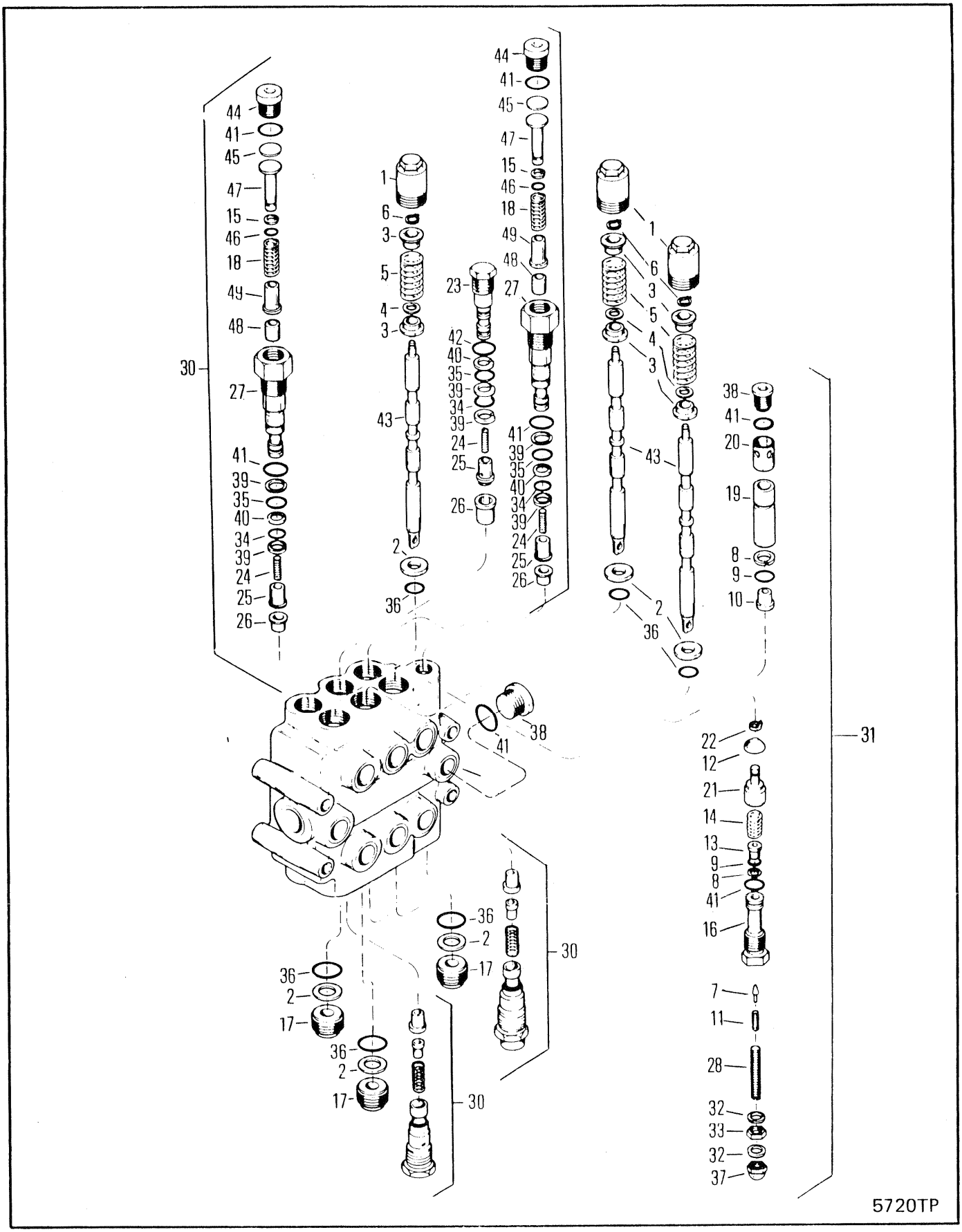
5720TP

# CONTROL VALVE-ARCH, GRAPPLE & MOTOR HEAD
# SOUPAPE DE CONTRÔLE-ARCHE, GRAPPIN & MOTEUR
# STEUERVENTIL-BOGEN, GREIFER & MOTOR
# VÁLVULA DE CONTRÔLE-ARCO, GARRA & MOTOR
# VÁLVULA DE CONTROL- ARCO, AGARRADERA & MOTOR

| No. | Part No. | Qty | Description | Description | Benennung | Descrição | Descripción |
|---|---|---|---|---|---|---|---|
| A | [1]1915134 | 1 | Valve assy | soupape ens | Ventil vollst | válvula conj | válvula conj |
| B | [2]1990177 | 1 | Poppet assy | ens clapet | Ventilkegel vollst | gatilho conj | clapeta conj |
| 1 | 878196 | 1 | Cap | chapeau | Kappe | tampa | tapa |
| 2 | 878231 | 2 | Retainer | arrêtoir | Halterung | retentor | retén |
| 3 | 878232 | 2 | Spacer | entretoise | Distanzteil | espaçador | espaciador |
| 4 | 878233 | 1 | Washer | rondelle | Scheibe | arruela | arandela |
| 5 | 878234 | 1 | Spring | ressort | Feder | mola | resorte |
| 6 | 878235 | 1 | Snap ring | circlips | Sperring | anel de trava | anillo de retención |
| 7 | 883734 | 1 | Plunger | plongeur | Druckstange | embolo | émbolo buzo |
| 8 | 899038 | 2 | Ring | anneau | Ring | anel | anillo |
| 9 | 899039 | 2 | O-ring | joint torique | O Ring | anel-O | anillo-O |
| 10 | 944469 | 1 | Seat | sige | Sitz | assento | asiento |
| 11 | 944471 | 1 | Spring | ressort | Feder | mola | resorte |
| 12 | [5]§--------- | 1 | Screen | crible | Sieb | tela | tamiz |
| 13 | 944645 | 1 | Seat | sige | Sitz | assento | asiento |
| 14 | 948251 | 1 | Spring | ressort | Feder | mola | resorte |
| 15 | §------- | 1 | Ring | anneau | Ring | anel | anillo |
| 16 | 1990175 | 1 | Cap | chapeau | Kappe | tampa | tapa |
| 17 | 1990176 | 1 | Retainer | arrêtoir | Halterung | retentor | retén |
| 18 | §------- | 1 | Spring | ressort | Feder | mola | resorte |
| 19 | †1990178 | 1 | Sleeve | manchon | Muffe | luva | manguito |
| 20 | 1990179 | 1 | Sleeve | manchon | Muffe | luva | manguito |
| 21 | [5]§--------- | 1 | Poppet | clapet | Ventilkegel | gatilho | clapeta |
| 22 | [5]§--------- | 1 | Snap ring | circlips | Sperring | anel de trava | anillo de retención |
| 23 | 1990182 | 1 | Cap | chapeau | Kappe | tampa | tapa |
| 24 | 1990183 | 2 | Spring | ressort | Feder | mola | resorte |
| 25 | 1990184 | 2 | Poppet | clapet | Ventilkegel | gatilho | clapeta |
| 26 | 1990185 | 2 | Seat | sige | Sitz | assento | asiento |
| 27 | 1990262 | 1 | Cap | chapeau | Kappe | tampa | tapa |
| 28 | 1990297 | 1 | Set screw | vis à pointe | Gewindestift | parafuso fixador | tornillo reten |
| 29 | †25K020003 | 1 | O-ring | joint torique | O Ring | anel-O | anillo-O |
| 30 | [3]1990948 | 1 | Relief valve | soupape decharge | Uberdr Ventil | valvula descarga | valvula alivio |
| 31 | [4]1990964 | 1 | Relief valve | soupape decharge | Uberdr Ventil | valvula descarga | valvula alivio |
| 32 | 1991112 | 2 | Seal | joint étanchéité | Dichtung | vedador | sello |
| 33 | 8D000005 | 1 | Jam nut | ecrou de bloquage | Sperrmutter | porca freio | tuerca de ajuste |
| 34 | 25K020016 | 2 | O-ring | joint torique | O Ring | anel-O | anillo-O |
| 35 | 25K020018 | 2 | O-ring | joint torique | O Ring | anel-O | anillo-O |
| 36 | 25K030024 | 2 | O-ring | joint torique | O Ring | anel-O | anillo-O |
| 37 | 47D000005 | 1 | Nut | écrou | Mutter | porca | tuerca |
| 38 | 47K000006 | 1 | Plug | bouchon | Stopfen | bujão | tapón |
| 39 | 73K000014 | 4 | Ring | anneau | Ring | anel | anillo |
| 40 | 73K000015 | 2 | Ring | anneau | Ring | anel | anillo |

[1] 3 Spool
[1] 3 tiroir
[1] 3 Spule
[1] 3 carretel
[1] 3 carrete

[2] Inc 21, 22 & 12

[3] 2200 PSI 154.7 Kg Cm²

[4] 1500 PSI 105.5 Kg Cm²

[5] See B
[5] Voir B
[5] Siehe B
[5] Veja B
[5] Véase B

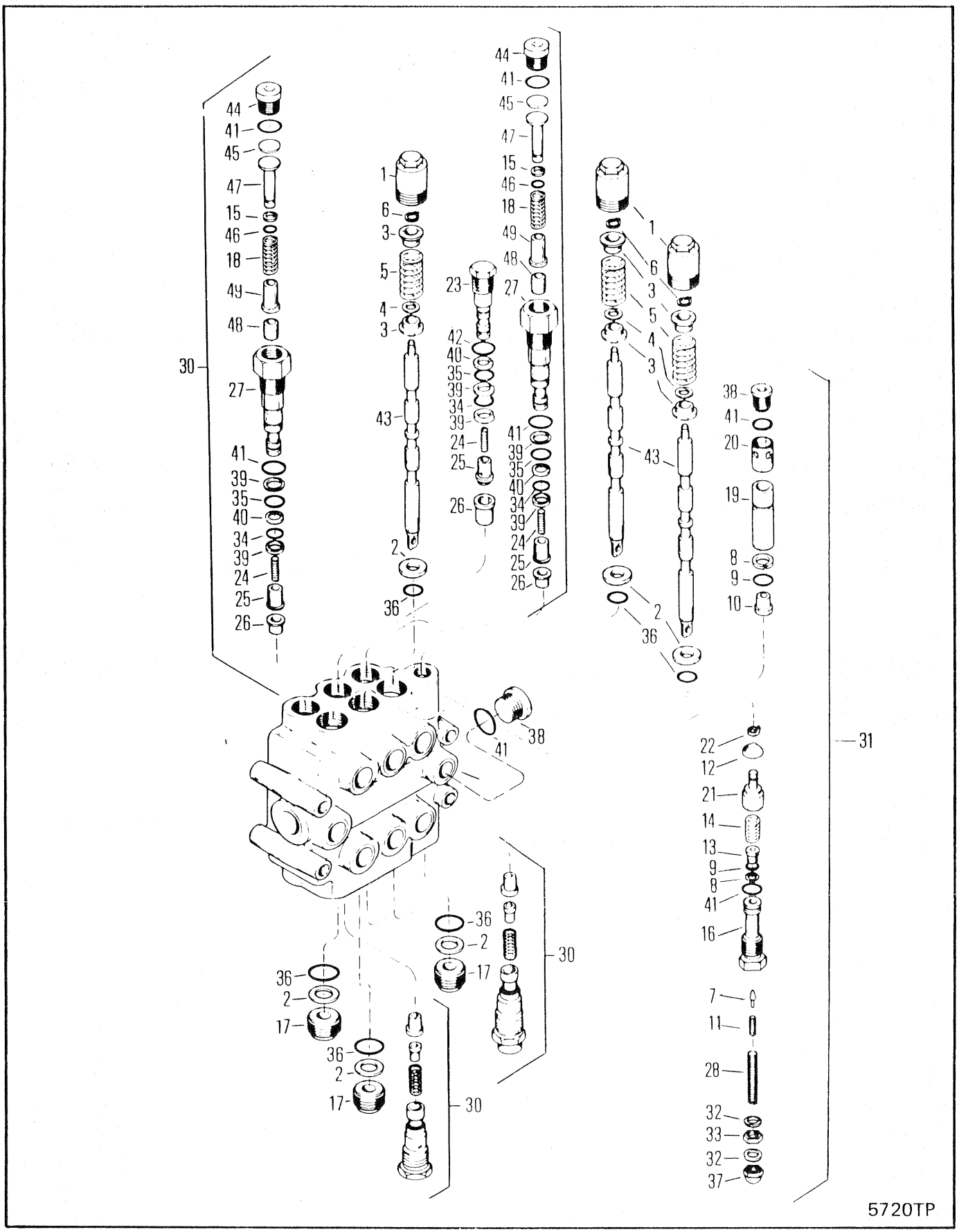
5720TP

# CONTROL VALVE, ARCH, GRAPPLE & MOTOR HEAD
# SOUPAPE DE CONTRÔLE, ARCHE, GRAPPIN & MOTEUR
# STEUERVENTIL, BOGEN, GREIFER & MOTOR
# VÁLVULA DE CONTRÔLE, ARCO, GARRA & MOTOR
# VÁLVULA DE CONTROL, ARCO, AGARRADERA Y MOTOR

| No. | Part No. | Qty | Description | Description | Benennung | Descrição | Descripción |
|---|---|---|---|---|---|---|---|
| A | [1]1915134 | 1 | Valve assy | soupape ens | Ventil vollst | válvula conj | válvula conj |
| B | [2]1990177 | 1 | Poppet assy | ens clapet | Ventilkegel vollst | gatilho conj | clapeta conj |
| 1 | 878196 | 1 | Cap | chapeau | Kappe | tampa | tapa |
| 2 | 878231 | 2 | Retainer | arrêtoir | Halterung | retentor | retén |
| 3 | 878232 | 2 | Spacer | entretoise | Distanzteil | espaçador | espaciador |
| 4 | 878233 | 1 | Washer | rondelle | Scheibe | arruela | arandela |
| 5 | 878234 | 1 | Spring | ressort | Feder | mola | resorte |
| 6 | 878235 | 1 | Snap ring | circlips | Sperring | anel de trava | anillo de retención |
| 7 | 883734 | 1 | Plunger | plongeur | Druckstange | embolo | émbolo buzo |
| 8 | 899038 | 2 | Ring | anneau | Ring | anel | anillo |
| 9 | 899039 | 2 | O-ring | joint torique | O Ring | anel-O | anillo-O |
| 10 | 944469 | 1 | Seat | sige | Sitz | assento | asiento |
| 11 | 944471 | 1 | Spring | ressort | Feder | mola | resorte |
| 12 | 944643 | 1 | Screen | crible | Sieb | tela | tamiz |
| 13 | 944645 | 1 | Seat | sige | Sitz | assento | asiento |
| 14 | 948251 | 1 | Spring | ressort | Feder | mola | resorte |
| 15 | §------- | 1 | Ring | anneau | Ring | anel | anillo |
| 16 | 1990175 | 1 | Cap | chapeau | Kappe | tampa | tapa |
| 17 | 1990176 | 1 | Retainer | arrêtoir | Halterung | retentor | retén |
| 18 | §------- | 1 | Spring | ressort | Feder | mola | resorte |
| 19 | †1990178 | 1 | Sleeve | manchon | Muffe | luva | manguito |
| 20 | 1990179 | 1 | Sleeve | manchon | Muffe | luva | manguito |
| 21 | †1990180 | 1 | Plunger | plongeur | Druckstange | embolo | émbolo buzo |
| 22 | 1990181 | 1 | Ring | anneau | Ring | anel | anillo |
| 23 | 1990182 | 1 | Cap | chapeau | Kappe | tampa | tapa |
| 24 | 1990183 | 2 | Spring | ressort | Feder | mola | resorte |
| 25 | 1990184 | 2 | Poppet | clapet | Ventilkegel | gatilho | clapeta |
| 26 | 1990185 | 2 | Seat | sige | Sitz | assento | asiento |
| 27 | 1990262 | 1 | Cap | chapeau | Kappe | tampa | tapa |
| 28 | 1990297 | 1 | Set screw | vis à pointe | Gewindestift | parafuso fixador | tornillo reten |
| 29 | †25K020003 | 1 | O-ring | joint torique | O Ring | anel-O | anillo-O |
| 30 | [3]1990948 | 1 | Relief valve | soupape decharge | Uberdr Ventil | valvula descarga | valvula alivio |
| 31 | [4]1990964 | 1 | Relief valve | soupape decharge | Uberdr Ventil | valvula descarga | valvula alivio |
| 32 | 1991112 | 2 | Seal | joint étanchéité | Dichtung | vedador | sello |
| 33 | 8D000005 | 1 | Jam nut | ecrou de bloquage | Sperrmutter | porca freio | tuerca de ajuste |
| 34 | 25K020016 | 2 | O-ring | joint torique | O Ring | anel-O | anillo-O |
| 35 | 25K020018 | 2 | O-ring | joint torique | O Ring | anel-O | anillo-O |
| 36 | 25K030024 | 2 | O-ring | joint torique | O Ring | anel-O | anillo-O |
| 37 | 47D000005 | 1 | Nut | écrou | Mutter | porca | tuerca |
| 38 | 47K000006 | 1 | Plug | bouchon | Stopfen | bujão | tapón |
| 39 | 73K000014 | 4 | Ring | anneau | Ring | anel | anillo |
| 40 | 73K000015 | 2 | Ring | anneau | Ring | anel | anillo |
| 41 | 91F000006 | 3 | O-ring | joint torique | O Ring | anel-O | anillo-O |
| 42 | 91F000007 | 1 | O-ring | joint torique | O Ring | anel-O | anillo-O |
| 43 | §--------- | - | Spool | tiroir | Spule | carretel | carrete |
| 44 | §--------- | 1 | Plug | bouchon | Stopfen | bujão | tapón |
| 45 | §--------- | 1 | Shim | cale | Beilage | calço | planchita |
| 46 | §--------- | 1 | Shim | cale | Beilage | calço | planchita |
| 47 | §--------- | 1 | Spring guide | gude du ressort | Federführung | guia da mola | guía del resorte |
| 48 | §--------- | 1 | Seat | sige | Sitz | assento | asiento |
| 49 | §--------- | 1 | Plunger | plongeur | Druckstange | embolo | émbolo buzo |

[1] 3 Spool
[1] 3 tiroir
[1] 3 Spule
[1] 3 carretel
[1] 3 carrete

[2] Inc 21, 22 & 12

[3] 2200 PSI 154.7 Kg Cm²

[4] 1500 PSI 105.5 Kg Cm²

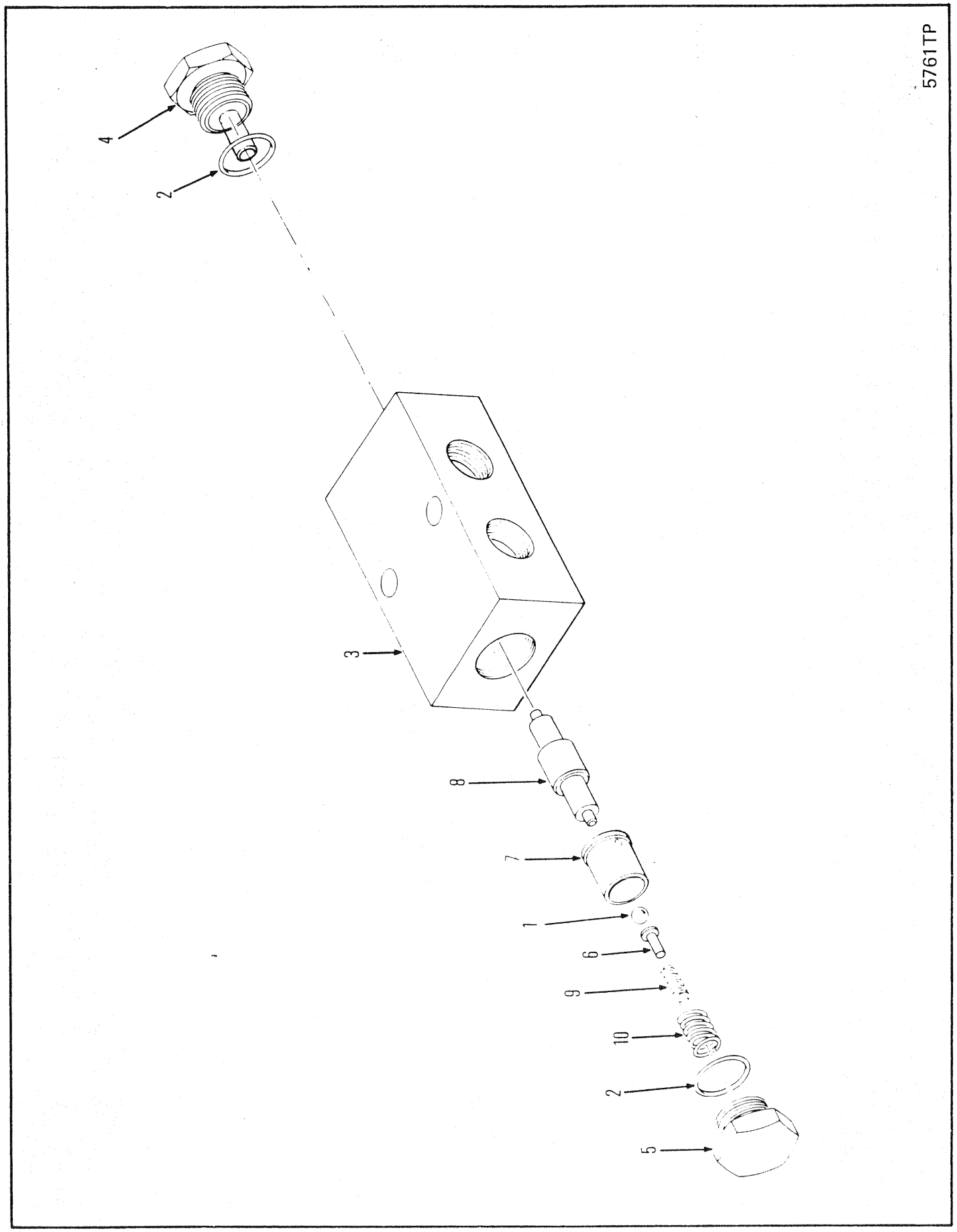
5761TP
4
2
3
8
7
1
6
9
10
2
5

# GRAPPLE LOCK VALVE
# SOUPAPE DE VERROUILLAGE DE GRAPPIN
# VENTIL - GREIFERSCHLOSS
# VÁLVULA DE GARRA DE FECHADURA
# VÁLVULA DE CERRADURA DE GARRA

| No. | Part No. | Qty | Description | Description | Benennung | Descrição | Descripción |
|---|---|---|---|---|---|---|---|
| A | **1924630** | 1 | Lockvalve assy | ens soup de sûreté | Sperrventil vollst | válv de fecham cj | válv sello cj |
| 1 | **992712** | 1 | Ball | bille | Kugel | esfera | bola |
| 2 | **58K000014** | 2 | O-ring | joint torique | O Ring | anel-O | anillo-O |
| 3 | **1991319** | 1 | Body | carrosserie | Karosserie | carroçria | carrocería |
| 4 | **1991830** | 1 | Plug | bouchon | Stopfen | bujão | tapón |
| 5 | **5291082** | 2 | Plug | bouchon | Stopfen | bujão | tapón |
| 6 | **5291083** | 1 | Spring end | extrémité du ress | Federende | terminal da mola | terminal del resorte |
| 7 | **5291084** | 1 | Poppet | clapet | Ventilkegel | gatilho | clapeta |
| 8 | **5291085** | 1 | Piston | piston | Kolben | pistão | pistón |
| 9 | **5291086** | 1 | Spring | ressort | Feder | mola | resorte |
| 10 | **5291087** | 1 | Spring | ressort | Feder | mola | resorte |

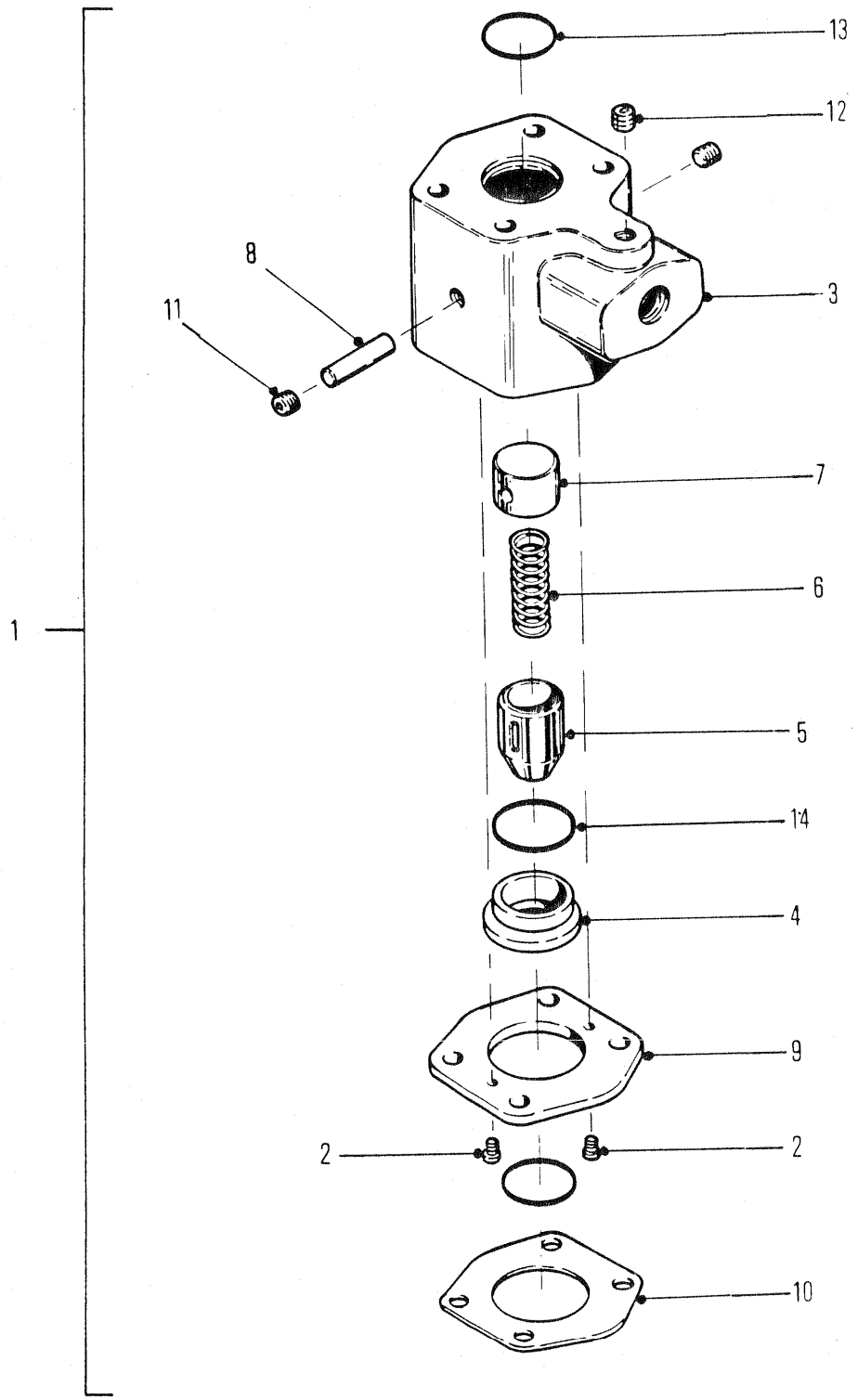


5760TP

## CHECK VALVE ASSY
## ENSEMBLE SOUPAPE DE SURETÉ
## RÜCKSCHLAGVENTIL VOLLST
## CONJUNTO VÁLVULA DE ESBARRO
## CONJUNTO VÁLVULA RETENCIÓN

| No. | Part No. | Qty | Description | Description | Benennung | Descrição | Descripción |
|---|---|---|---|---|---|---|---|
| 1 | [1]1915388 | 1 | Check valve | soupape de sureté | Rückshlagventile | válvula de esbarro | válv retención |
| 2 | 85G000106 | 2 | Bolt | boulon | Bolzen | parafuso | bulón |
| 3 | 1990967 | 1 | Housing | botier | Gehuse | carcaça | carcasa |
| 4 | 1990968 | 1 | Seat | sige | Sitz | assento | asiento |
| 5 | 1990969 | 1 | Poppet | clapet | Ventilkegel | gatilho | clapeta |
| 6 | 1990970 | 1 | Spring | ressort | Feder | mola | resorte |
| 7 | 1990971 | 1 | Cup | cuvette | Schale | capa | cubeta |
| 8 | 1990972 | 1 | Pin | goupille | Stift | pino | pasador |
| 9 | 1990973 | 1 | Plate | plaque | Platte | placa | placa |
| 10 | 6190354 | 1 | Plate | plaque | Platte | placa | placa |
| 11 | 16F000002 | 2 | Plug | bouchon | Stopfen | bujão | tapón |
| 12 | 16F000004 | 1 | Plug | bouchon | Stopfen | bujão | tapón |
| 13 | 25K040116 | 2 | O-ring | joint torique | O Ring | anel-O | anillo-O |
| 14 | 25K040124 | 1 | O-ring | joint torique | O Ring | anel-O | anillo-O |

[1] Inc 2➡14

666CUM 500E-101-CAC➡500G-9999-CAC
666GM 513E-101-CAC➡513G-9999-CAC

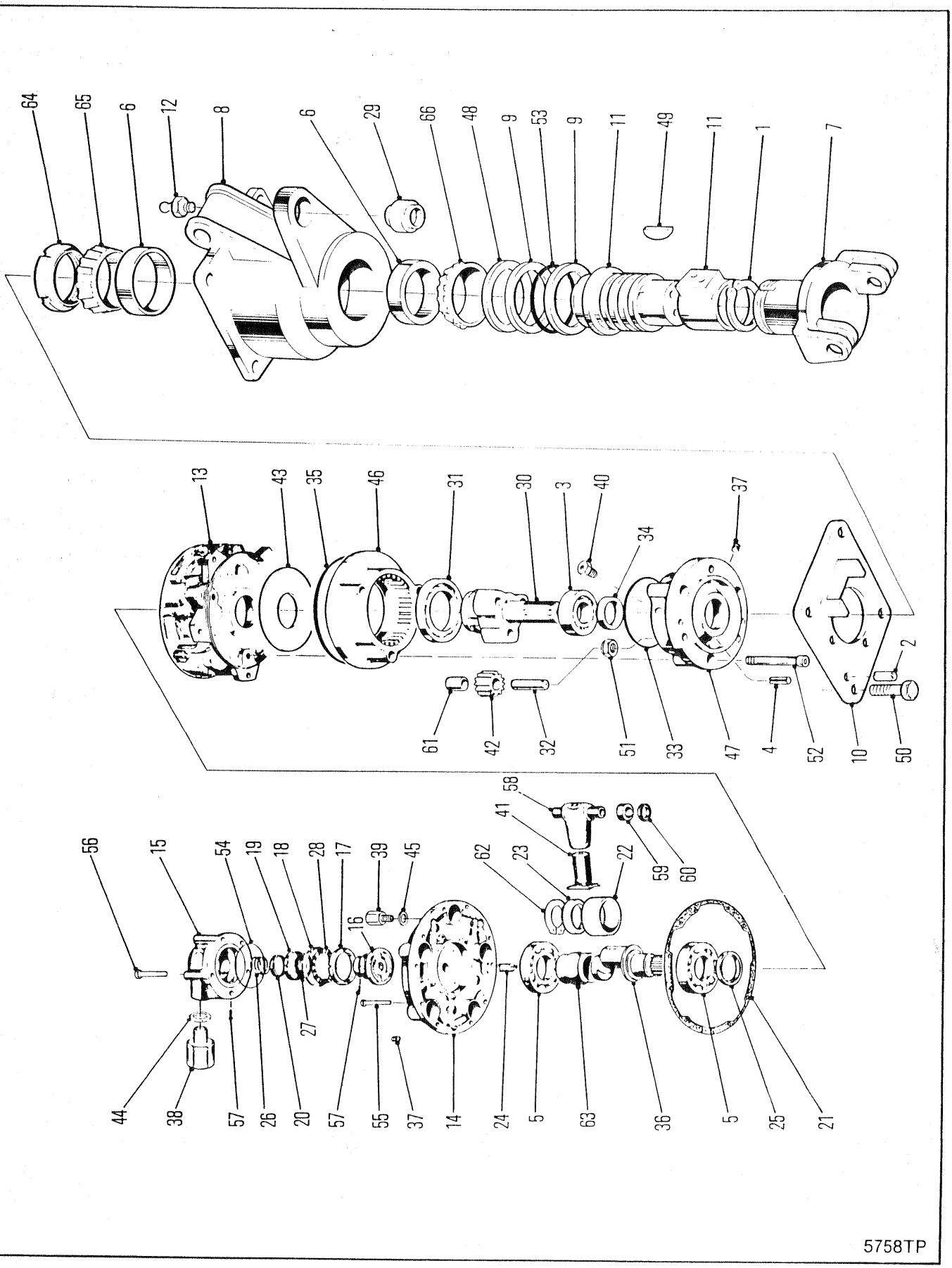
64
65
6
12
8
6
29
66
48
9
53
9
11
49
11
1
7
13
43
35
46
31
30
3
40
37
34
2
61
42
32
51
33
47
4
52
10
50
58
41
23
62
22
59
60
56
15
54
19
18
28
17
39
45
16
27
44
38
57
26
20
57
55
37
14
24
5
63
36
5
25
21

5758TP

# GRAPPLE ROTATING HEAD ASSEMBLY
# ENSEMBLE DE CULASSE ROTATIVE DE GRAPPIN
# GREIFERDREHKOPF VOLLSTÄNDIG
# CONJUNTO DE GARRAS DE CABEÇA ROTATIVA
# CONJUNTO DE CABEZA ROTATORIA DE AGARRE

| No. | Part No. | Qty | Description | Description | Benennung | Descrição | Descripción |
|---|---|---|---|---|---|---|---|
| A | [1]1905501 | 1 | Motor head | culasse de moteur | motorenkopf | cabea do motor | cabeza del motor |
| B | [2]1990532 | 1 | Motor assy | ass de moteur | Motoreinheit | conj dô motor | conj motor |
| C | 1990557 | 1 | Speed reducer | réduct de vitesse | Untersetzung | redutor velocidade | reductor velocidade |
| D | [5]†1991044 | 1 | Repair kit | trousse de reparation | Reparatursatz | conjunto de reparo | juego de reparación |
| 1 | 214337 | 2 | Ring | anneau | Ring | anel | anillo |
| 2 | 300225 | 2 | Pin | goupille | Stift | pino | pasador |
| 3 | 302712 | 1 | Bearing | palier | Lager | mancal | cojinete |
| 4 | 661978 | 2 | Pin | goupille | Stift | pino | pasador |
| 5 | 713997 | 2 | Bearing | palier | Lager | mancal | cojinete |
| 6 | 1318083 | 2 | Cup | cuvette | Schale | capa | cubeta |
| 7 | 1931401 | 1 | Shaft | arbre | Welle | ávore | árbol |
| 8 | 1915221 | 1 | Housing | botier | Gehuse | carcaça | carcasa |
| 9 | 1906357 | 6 | Ring | anneau | Ring | anel | anillo |
| 10 | 1906374 | 1 | Plate | plaque | Platte | placa | placa |
| 11 | [3]1916920 | 1 | Shaft & Hsg | arbre trans&encastre | Wellen und Gehäuse | eixo e carcaça | eje y carcasa |
| 12 | 12H000015 | 1 | Fitting grease | graisseur | Nippel Schmier | graxeira | grasera |
| 13 | 1990533 | 1 | Motor body | corps de moteur | Motorblock | corpo do motor | cuerpo del motor |
| 14 | 1990534 | 1 | Motor cover | couvercle de moteur | Motordeckel | tampa do motor | cub del motor |
| 15 | 1990535 | 1 | Housing | botier | Gehuse | carcaça | carcasa |
| 16 | 1990540 | 1 | Distributor | distributeur | Verteiler | distribuidor | distribuidor |
| 17 | 1990541 | 1 | Ring | anneau | Ring | anel | anillo |
| 18 | 1990542 | 1 | Ring | anneau | Ring | anel | anillo |
| 19 | 1990543 | 1 | Ring | anneau | Ring | anel | anillo |
| 20 | 1990544 | 1 | Ring | anneau | Ring | anel | anillo |
| 21 | 1990546 | 1 | Gasket | garniture | Dichtung | gaxeta | empaquetadura |
| 22 | 1990547 | 2 | Ring | anneau | Ring | anel | anillo |
| 23 | 1992349 | 2 | Spring | ressort | Feder | mola | resorte |
| 24 | 1990550 | 1 | Pin | goupille | Stift | pino | pasador |
| 25 | 1990551 | 1 | Seal | joint étanchéité | Dichtung | vedador | sello |
| 26 | 1990554 | 1 | Spring | ressort | Feder | mola | resorte |
| 27 | 1990555 | 1 | Spring | ressort | Feder | mola | resorte |
| 28 | 1990556 | 1 | Spring | ressort | Feder | mola | resorte |
| 29 | 1574466 | 1 | Bushing | chemise | Buchse | bucha | buje |
| 30 | 1990559 | 1 | Crankshaft | vilbrequin | Kurbelwelle | virabrequim | cigüeal |
| 31 | 1990560 | 1 | Bearing | palier | Lager | mancal | cojinete |
| 32 | 1990564 | 3 | Pin | goupille | Stift | pino | pasador |
| 33 | 1990565 | 1 | O-ring | joint torique | O Ring | anel-O | anillo-O |
| 34 | 1990566 | 1 | Seal | joint étanchéité | Dichtung | vedador | sello |
| 35 | 1990567 | 1 | O-ring | joint torique | O Ring | anel-O | anillo-O |
| 36 | 1990568 | 1 | Crankshaft | vilbrequin | Kurbelwelle | virabrequim | cigüeal |
| 37 | 1990569 | 4 | Plug | bouchon | Stopfen | bujão | tapón |
| 38 | 1990571 | 2 | Adapter | adaptateur | Zwischenstück | adaptador | adaptador |
| 39 | 1990572 | 1 | Adapter | adaptateur | Zwischenstück | adaptador | adaptador |
| 40 | 1990573 | 1 | Check valve | soupape de sureté | Rückshlagventile | válvula de esbarro | válv retención |
| 41 | [4]1990574 | 5 | Piston | piston | Kolben | pistão | pistón |
| 42 | [6]1990596 | 3 | Wheel | roue | Rad | roda | rueda |
| 43 | 1990606 | 1 | Plate | plaque | Platte | placa | placa |
| 44 | 1990628 | 3 | O-ring | joint torique | O Ring | anel-O | anillo-O |
| 45 | 1990629 | 1 | O-ring | joint torique | O Ring | anel-O | anillo-O |

[1] Inc 3➡5, 13➡28, 30➡45, 46, 47, 51, 52, 54➡60, 62 & 63

[2] Inc 5, 13➡28, 36➡39, 41, 44, 45, 54➡60, 62

[3] Inc 1, 9, 49 & 53

[4] Inc 58

[5] Inc 21, 25, 33, 34, 35, 54, 57, 59, 60

[6] Inc 61

[7] Ref. 48

[8] Ref. 41

[9] Ref. 42

666GMGR 515A-101-CAC➡515A-9999-CAC

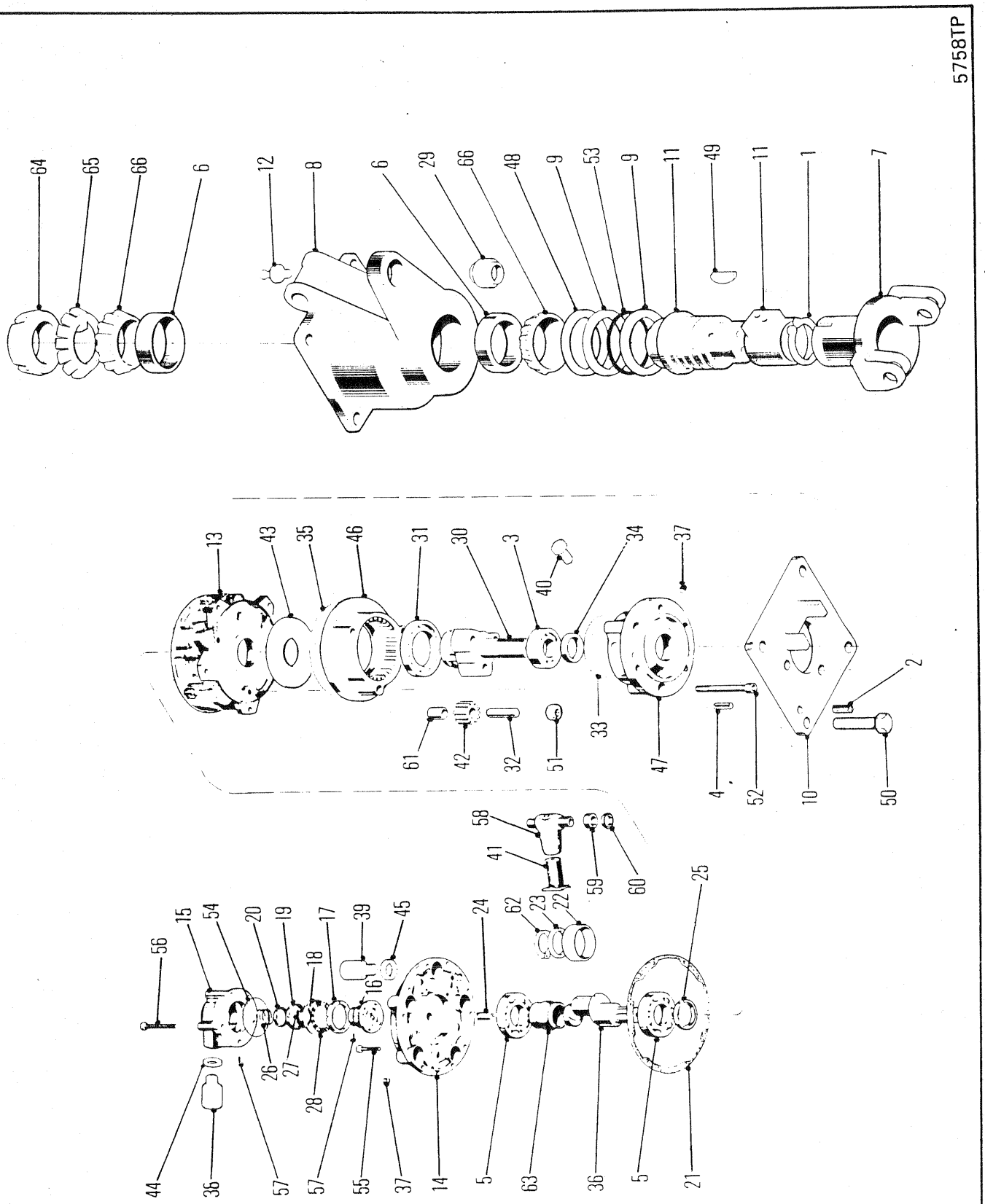
5758TP
64
65
66
6
12
8
6
29
66
48
9
53
9
11
49
11
1
7
13
43
35
46
31
30
3
40
34
37
61
42
32
51
33
47
4
52
10
50
2
58
41
59
60
25
62
23
22
24
15
54
20
19
17
39
45
56
18
16
26
27
28
57
55
37
14
5
63
36
5
21
44
36
57

# GRAPPLE ROTATING HEAD ASSEMBLY
# ENSEMBLE DE CULASSE ROTATIVE DE GRAPPIN
# GREIFERDREHKOPF VOLLSTÄNDIG
# CONJUNTO DE GARRAS DE CABEÇA ROTATIVA
# CONJUNTO DE CABEZA ROTATORIA DE AGARRE

| No. | Part No. | Qty | Description | Description | Benennung | Descrição | Descripción |
|---|---|---|---|---|---|---|---|
| 46 | **1990631** | 1 | Gear | engrenage | Zahnrad | engrenagem | engranaje |
| 47 | **1990632** | 1 | Case | boîtier | Gehäuse | carcaça | carcasa |
| 48 | **1915219** | - | Spacer | entretoise | Distanzteil | espaçador | espaciador |
| 49 | **6J001255** | 1 | Key | clavette | Keil | chaveta | chaveta |
| 50 | **17C000840** | 4 | Bolt | boulon | Bolzen | parafuso | bulón |
| 51 | **17D000006** | 3 | Nut | écrou | Mutter | porca | tuerca |
| 52 | **2GM001290** | 3 | Screw | vis | Schraube | parafuso | tornillo |
| 53 | **25K040300** | 3 | O-ring | joint torique | O Ring | anel-O | anillo-O |
| 54 | **25K040304** | 1 | O-ring | joint torique | O Ring | anel-O | anillo-O |
| 55 | **4CM01035** | 10 | Bolt | boulon | Bolzen | parafuso | bulón |
| 56 | **4CM01080** | 5 | Bolt | boulon | Bolzen | parafuso | bulón |
| 57 | [7]§--------- | 14 | Pin | goupille | Stift | pino | pasador |
| 58 | [8]--------- | 5 | Cylinder | cylindre | Zylinder | cilindro | cilindro esclavo |
| 59 | [7]§--------- | 10 | Bushing | chemise | Buchse | bucha | buje |
| 60 | [7]§--------- | 10 | Seal | joint étanchéité | Dichtung | vedador | sello |
| 61 | [9]§--------- | - | Bushing | chemise | Buchse | bucha | buje |
| 62 | **1992350** | 1 | Ring | anneau | Ring | anel | anillo |
| 63 | **1992351** | 1 | Support | support | Abstützung | suporte | soporte |
| 64 | **1938931** | 1 | Locknut | contre-écrou | Gegenmutter | contra porca | contratuerca |
| 65 | **1318084** | 2 | Cone | cône | Kegel | cone | cono |

[1] Inc 3➡5, 13➡28, 30➡45, 46, 47, 51, 52, 54➡60, 62 & 63

[2] Inc 5, 13➡28, 36➡39, 41, 44, 45, 54➡60, 62

[3] Inc 1, 9, 49 & 53

[4] Inc 58

[5] Inc 21, 25, 33, 34, 35, 54, 57, 59, 60

[6] Inc 61

[7] Ref. 48

[8] Ref. 41

[9] Ref. 42

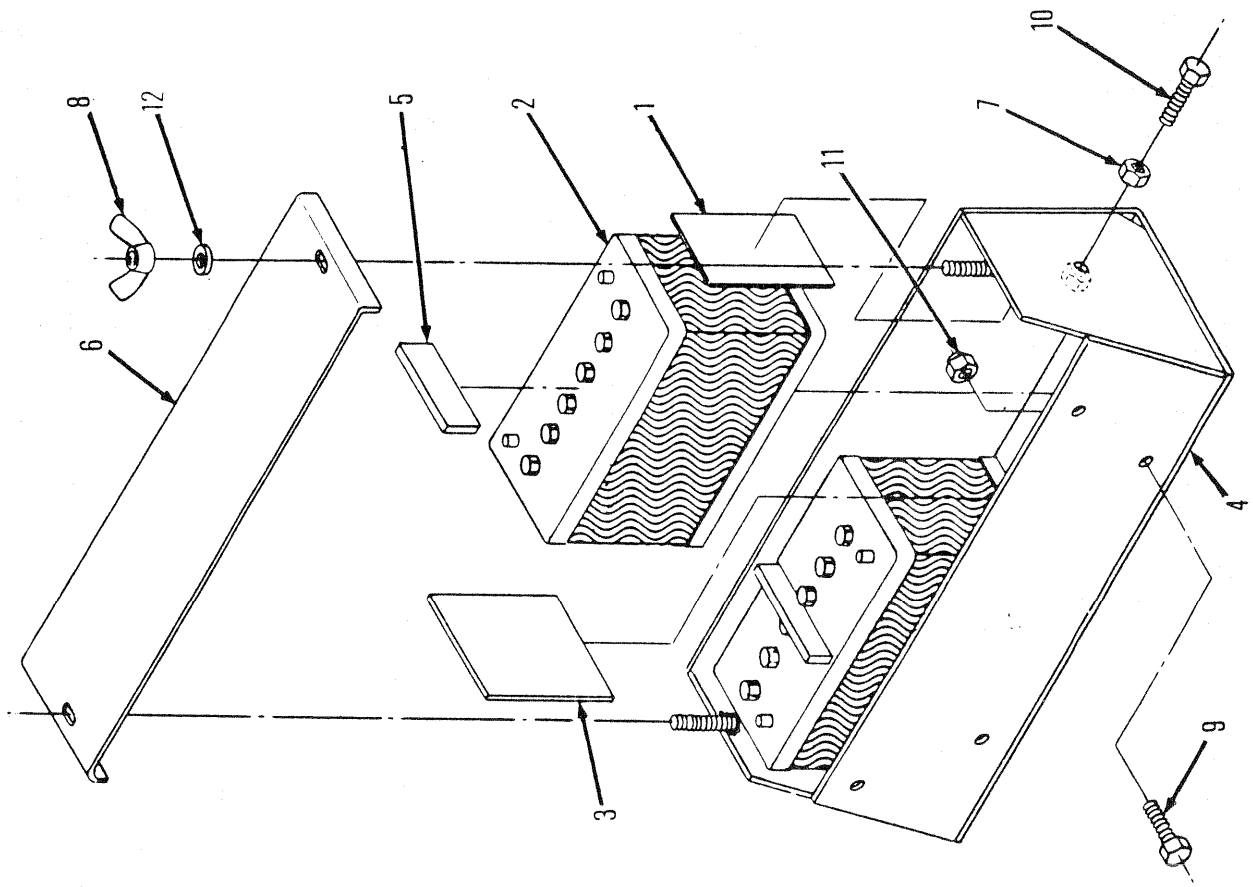
5756TP
8
12
5
2
1
10
7
11
6
4
3
9

## BATTERY & BATTERY MOUNT
## BATTERIE & FIXATION DE BATTERIE
## BATTERIE & BATTERIEHALTERUNG
## BATERIA & MONTAGEM DA BATERIA
## BATERÍA & MONTAJE DE BATERÍA

| No. | Part No. | Qty | Description | Description | Benennung | Descrição | Descripción |
|---|---|---|---|---|---|---|---|
| 1 | **791949** | 1 | Plate | plaque | Platte | placa | placa |
| 2 | **1801094** | 2 | Battery | batterie | Batterie | bateria | batería |
| 3 | **1900806** | 1 | Spacer | entretoise | Distanzteil | espaçador | espaciador |
| 4 | **1900902** | 1 | Box | bote | Kasten | caixa | caja |
| 5 | **1903464** | 2 | Spacer | entretoise | Distanzteil | espaçador | espaciador |
| 6 | **1904958** | 1 | Cover | couvercle | Deckel | tampa | tapa |
| 7 | **7D0000012** | 1 | Nut | écrou | Mutter | porca | tuerca |
| 8 | **16D000008** | 2 | Nut | écrou | Mutter | porca | tuerca |
| 9 | **17C001020** | 4 | Bolt | boulon | Bolzen | parafuso | bulón |
| 10 | **17C001224** | 1 | Bolt | boulon | Bolzen | parafuso | bulón |
| 11 | **17D000009** | 4 | Nut | écrou | Mutter | porca | tuerca |
| 12 | **25E000021** | 1 | Washer | rondelle | Scheibe | arruela | arandela |

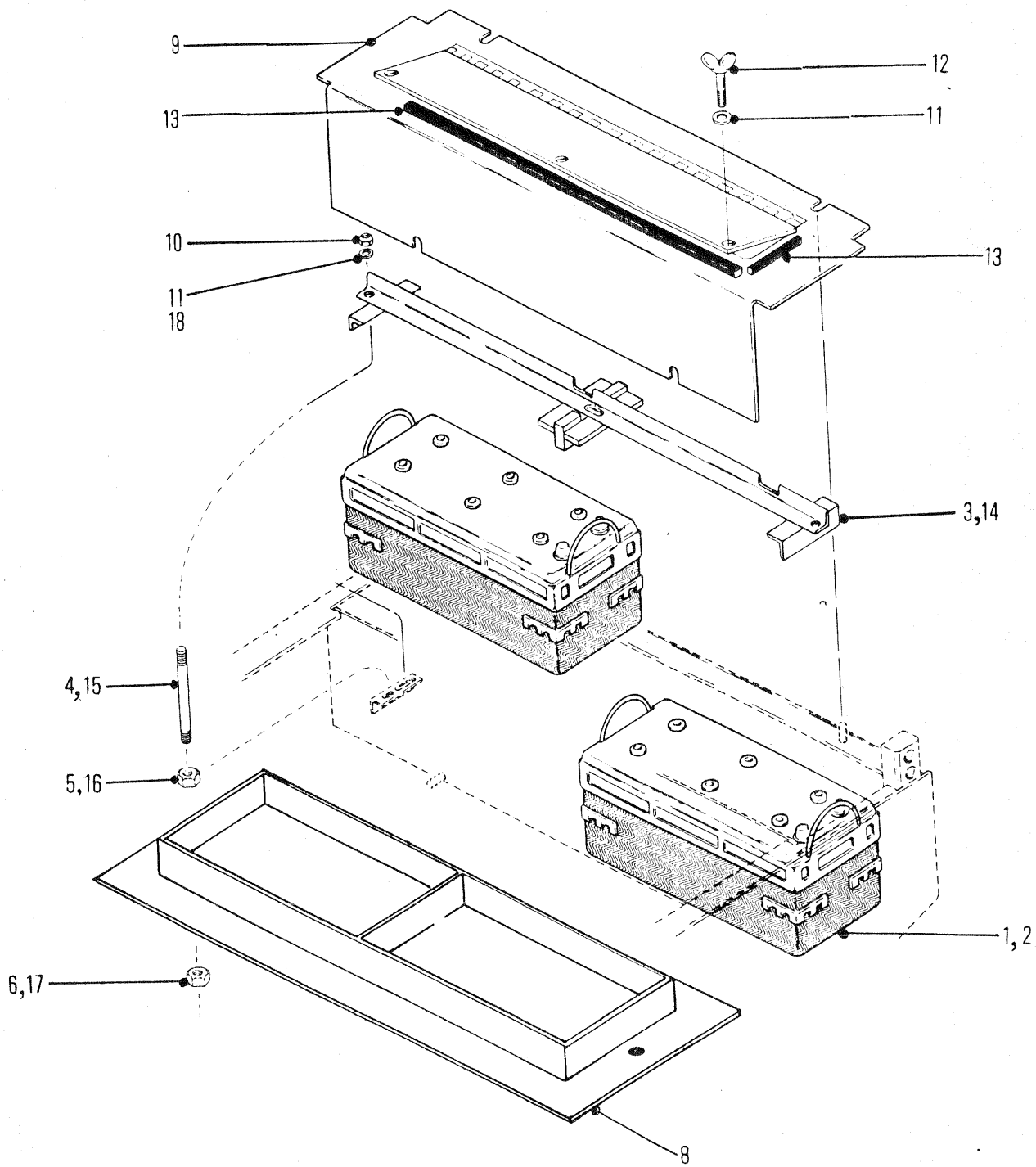
9
13
10
11
18
12
11
13
3,14
4,15
5,16
6,17
1,2
8
5755TP

# BATTERY & BATTERY MOUNT
# BATTERIE & FIXATION DE BATTERIE
# BATTERIE & BATTERIEHALTERUNG
# BATERIA & MONTAGEM DA BATERIA
# BATERÍA & MONTAJE DE BATERÍA

| No. | Part No. | Qty | Description | Description | Benennung | Descrição | Descripción |
|---|---|---|---|---|---|---|---|
| 1 | 1801094 | 2 | Battery | batterie | Batterie | bateria | batería |
| 2 | [1]1801148 | 2 | Battery | batterie | Batterie | bateria | batería |
| 3 | 1906257 | 1 | Hold down | installer | Nach unten Halten | restritor | restringir |
| 4 | 1914211 | 2 | Stud | goujon | Stift | prisioneiro | espárrago |
| 5 | 7D0000005 | 4 | Nut | écrou | Mutter | porca | tuerca |
| 6 | 17D000002 | 4 | Nut | écrou | Mutter | porca | tuerca |
| 7 | †25E000015 | 7 | Washer | rondelle | Scheibe | arruela | arandela |
| 8 | 1914213 | 1 | Retainer | arrêtoir | Halterung | retentor | retén |
| 9 | 1909803 | 1 | Cover assy | couvercle ens | Deckel vollst | tampa conj | tapa conj |
| 10 | 17D000003 | 4 | Nut | écrou | Mutter | porca | tuerca |
| 11 | 25E000017 | 4 | Washer | rondelle | Scheibe | arruela | arandela |
| 12 | 1903932 | 3 | Thumbscrew | vis à oreilles | Daumenschraube | parafuso de orelha | tornillo de mano |
| 13 | ●1901632 | - | Weatherstrip | calfatage | Zugluftabschliesser | tira vedadora | calafate ventana |
| 14 | [1]1914972 | 1 | Hold down assy | ass dinstallation | Halteeinheit | conj restritor | conj restringir |
| 15 | [1]1915095 | 2 | Rod | tige | Stange | varão | varilla |
| 16 | [1]17D000003 | 6 | Nut | écrou | Mutter | porca | tuerca |
| 17 | [1]63D000006 | 2 | Nut | écrou | Mutter | porca | tuerca |
| 18 | [1]25E000015 | 3 | Washer | rondelle | Scheibe | arruela | arandela |

[1] □666CUM

666CUM 500E-101-CAC➡500G-9999-CAC
666GM 513E-101-CAC➡513G-9999-CAC
666GMGR 515A-101-CAC➡515A-9999-CAC

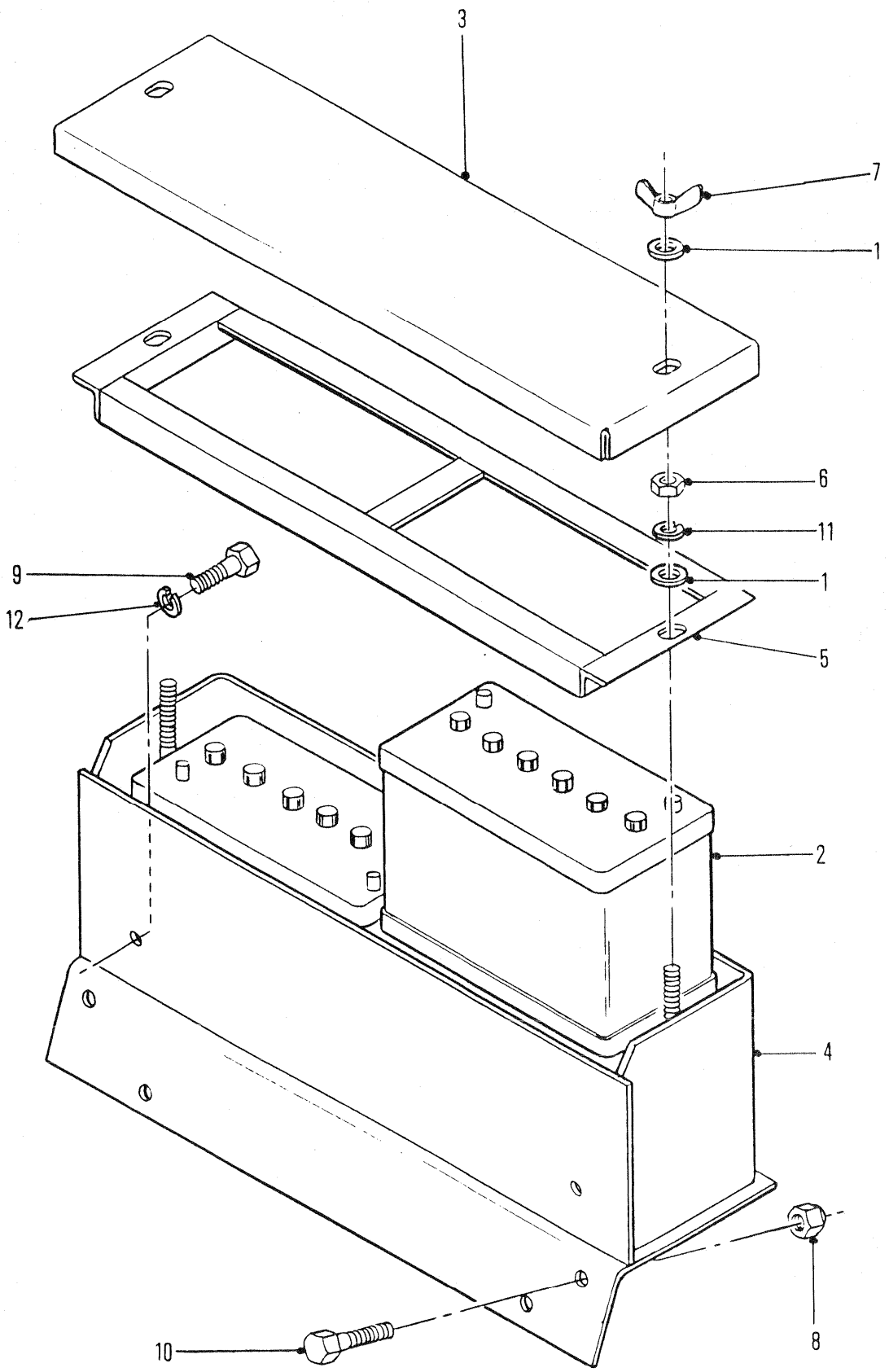
3
7
1
6
11
1
9
12
5
2
4
8
10
5747TP

## BATTERY & BATTERY MOUNT
## BATTERIE & FIXATION DE BATTERIE
## BATTERIE & BATTERIEHALTERUNG
## BATERIA & MONTAGEM DA BATERIA
## BATERÍA & MONTAJE DE BATERÍA

| No. | Part No. | Qty | Description | Description | Benennung | Descrição | Descripción |
|---|---|---|---|---|---|---|---|
| 1 | **664423** | 4 | Washer | rondelle | Scheibe | arruela | arandela |
| 2 | **1801094** | 2 | Battery | batterie | Batterie | bateria | batería |
| 3 | **1906219** | 1 | Cover | couvercle | Deckel | tampa | tapa |
| 4 | **1906231** | 1 | Battery box | batterie coffre | Batterie Kasten | caixa bateria | caja bateria |
| 5 | **1906257** | 1 | Hold down assy | ass dinstallation | Halteeinheit | conj restritor | conj restringir |
| 6 | **7D000006** | 2 | Nut | écrou | Mutter | porca | tuerca |
| 7 | **16D000006** | 2 | Wing nut | écrou papillon | Flügelmutter | porca barboleta | tuerca mariposa |
| 8 | **17D000009** | 4 | Nut | écrou | Mutter | porca | tuerca |
| 9 | **17C000816** | 2 | Bolt | boulon | Bolzen | parafuso | bulón |
| 10 | **17C001024** | 4 | Bolt | boulon | Bolzen | parafuso | bulón |
| 11 | **24E000006** | 2 | Lockwasher | rondelle frein | Sicherungsscheibe | arruela de pressão | arandela seguridad |
| 12 | **24E000008** | 2 | Lockwasher | rondelle frein | Sicherungsscheibe | arruela de pressão | arandela seguridad |

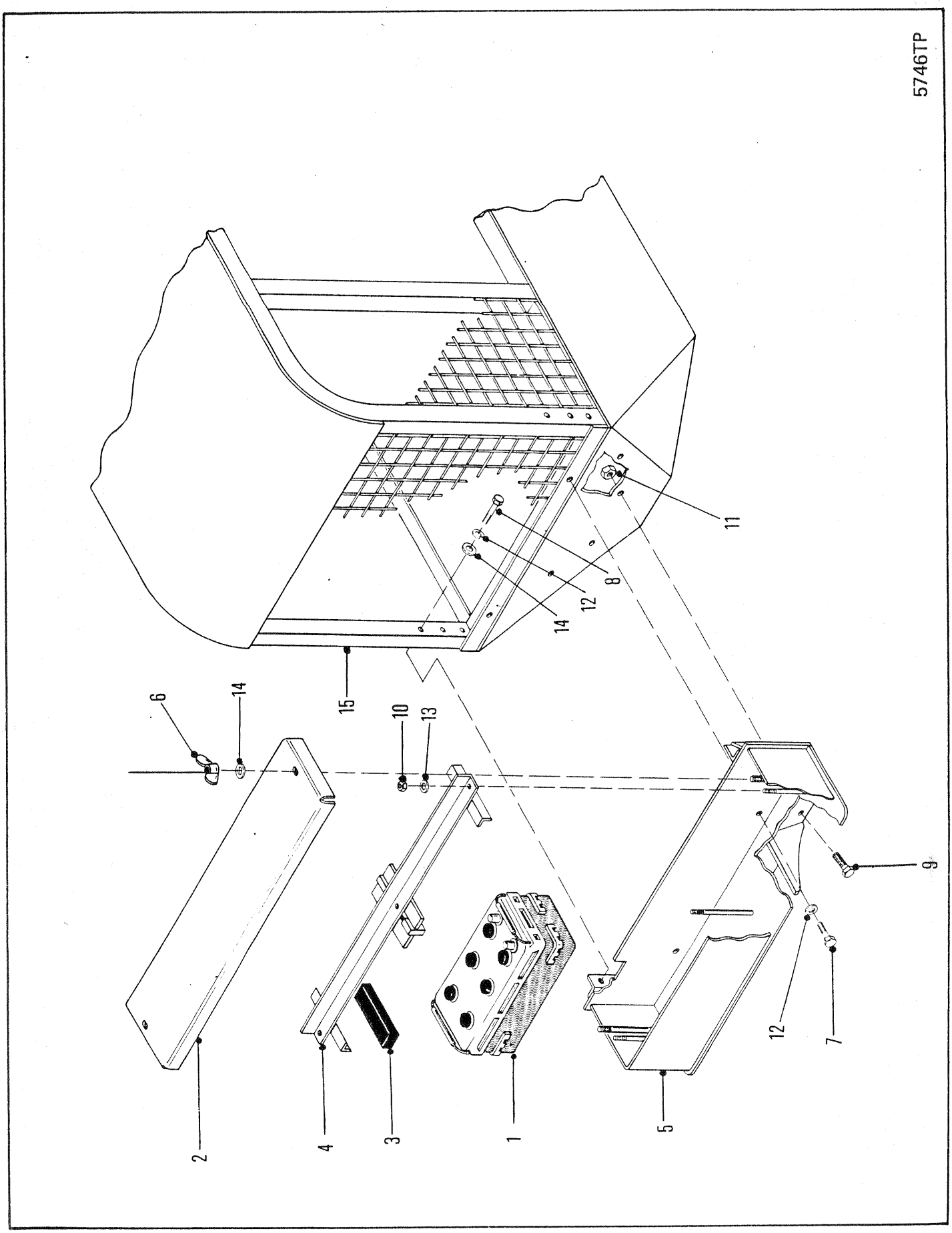
5746TP
11
8
12
14
15
6
14
10
13
9
12
7
2
4
3
1
5

# BATTERY & BATTERY MOUNT
# BATTERIE & FIXATION DE BATTERIE
# BATTERIE & BATTERIEHALTERUNG
# BATERIA & MONTAGEM DA BATERIA
# BATERÍA & MONTAJE DE BATERÍA

| No. | Part No. | Qty | Description | Description | Benennung | Descrição | Descripción |
|---|---|---|---|---|---|---|---|
| 1 | **1801148** | 2 | Battery | batterie | Batterie | bateria | batería |
| 2 | **1906104** | 1 | Cover | couvercle | Deckel | tampa | tapa |
| 3 | **1906106** | 4 | Spacer | entretoise | Distanzteil | espaçador | espaciador |
| 4 | **1908667** | 1 | Hold down assy | ass dinstallation | Halteeinheit | conj restritor | conj restringir |
| 5 | **1908668** | 1 | Battery box | batterie coffre | Batterie Kasten | caixa bateria | caja bateria |
| 6 | **16D000008** | 2 | Wing nut | écrou papillon | Flügelmutter | porca barboleta | tuerca mariposa |
| 7 | **17C000816** | 2 | Bolt | boulon | Bolzen | parafuso | bulón |
| 8 | **17C000840** | 6 | Bolt | boulon | Bolzen | parafuso | bulón |
| 9 | **17C001020** | 4 | Bolt | boulon | Bolzen | parafuso | bulón |
| 10 | **17D000002** | 3 | Nut | écrou | Mutter | porca | tuerca |
| 11 | **17D000009** | 4 | Nut | écrou | Mutter | porca | tuerca |
| 12 | **24E000008** | 8 | Lockwasher | rondelle frein | Sicherungsscheibe | arruela de pressão | arandela seguridad |
| 13 | **25E000015** | 3 | Washer | rondelle | Scheibe | arruela | arandela |
| 14 | **25E000021** | 8 | Flatwasher | rondelle plate | Unterlegscheibe | arruela chata | arandela plana |
| 15 | O--------- | 1 | Canopy | dais | Schutzdach | dossel | dosel |

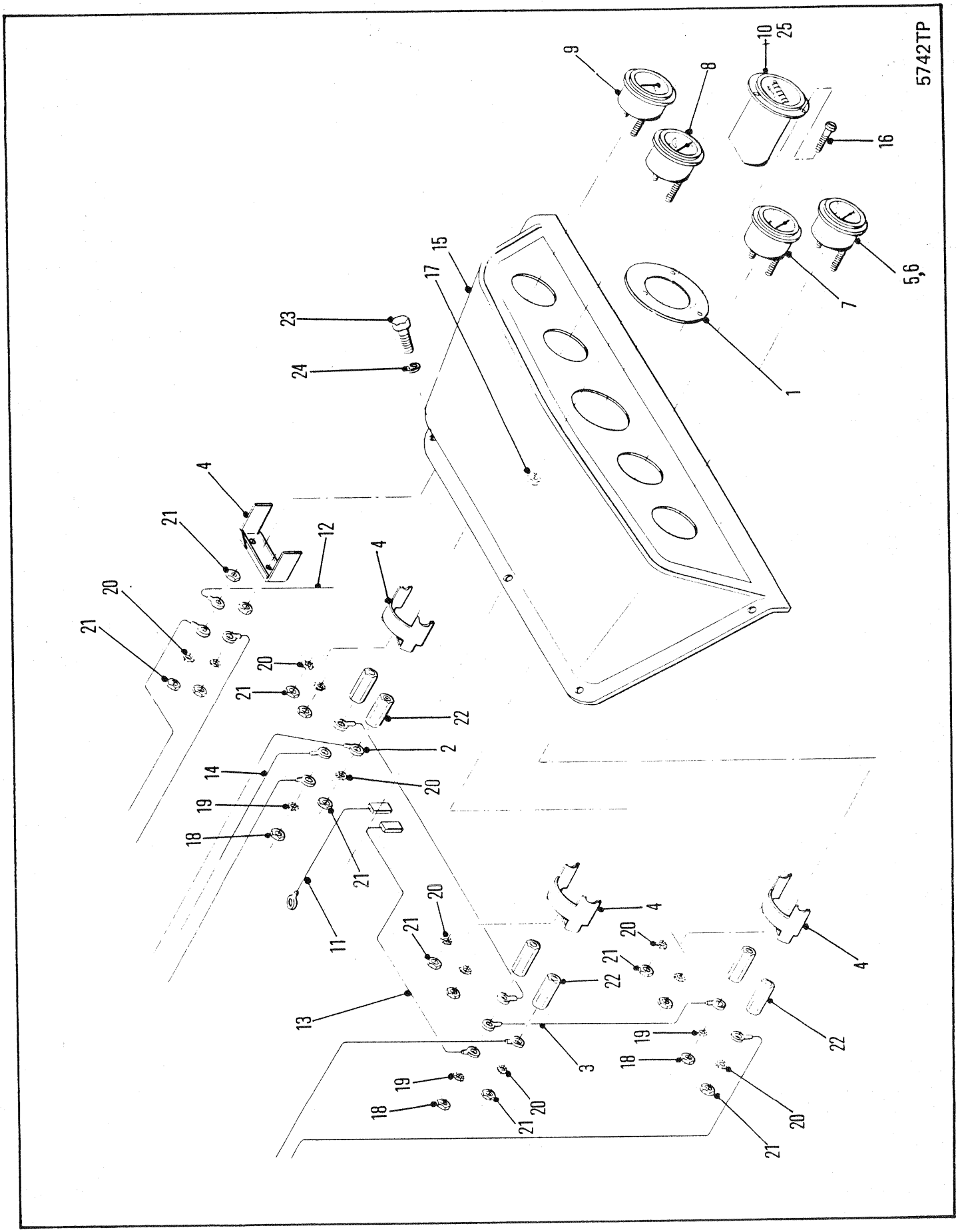
5742TP
1
2
3
4
5,6
7
8
9
10
11
12
13
14
15
16
17
18
19
20
21
22
23
24
25

# INSTRUMENT PANEL
# TABLEAU DE BORD
# INSTRUMENTENBRETT
# PAINEL DE INSTRUMENTOS
# PANEL DE INSTRUMENTOS

| No. | Part No. | Qty | Description | Description | Benennung | Descrição | Descripción |
|---|---|---|---|---|---|---|---|
| 1 | **2524789** | 1 | Dampener | amortisseur | Dämpfer | amortecedor | amortiguador |
| 2 | **652764** | 1 | Wire | fil | Draht | fio | cable |
| 3 | **695343** | 1 | Jumper wire | fil volant | Schaltdraht | cabo jumper | alambre del conec |
| 4 | **1534136** | 4 | Clamp | pince | Schelle | braçadeira | abrazadera |
| 5 | [1]**1534139** | 1 | Gauge oil press | jauge press huile mot | Oldruckmesser Mot | manôm óleo motor | manóm aceite motor |
| 6 | [1]**1534140** | 1 | Gauge oil press | jauge press huile mot | Oldruckmesser Mot | manôm óleo motor | manóm aceite motor |
| 7 | [2]**1534143** | 1 | Gaug water temp | jauge de temp eau | Wassertemp anz | med temper água | med temp agua |
| 8 | [1]**1534144** | 2 | Gauge conv temp | jauge convertisseur | Tempmssr Drehmwndlr | termtro conversor | termtro convertidor |
| 9 | **1798568** | 1 | Gauge ammeter | jauge de lampmtre | Ampremeter | cal do amperímetro | amperímetro |
| 10 | [3]**1811377** | 1 | Hourmeter kit | jeu compteur horaire | Stundenzählersatz | jogo horímetro | juego cuentahoras |
| 11 | **1900460** | 1 | Wire | fil | Draht | fio | cable |
| 12 | **1900464** | 1 | Wire | fil | Draht | fio | cable |
| 13 | **1901447** | 1 | Jumper wire | fil volant | Schaltdraht | cabo jumper | alambre del conec |
| 14 | **1901448** | 1 | Wire | fil | Draht | fio | cable |
| 15 | **1902847** | 1 | Inst panel | tableau de bord | Instrumentenbrett | painel de instrumentos | panel instrumentos |
| 16 | **85G000608** | 6 | Screw | vis | Schraube | parafuso | tornillo |
| 17 | **15D000006** | 3 | Nut | écrou | Mutter | porca | tuerca |
| 18 | **12D000008** | 3 | Nut | écrou | Mutter | porca | tuerca |
| 19 | **12E000008** | 3 | Lockwasher | rondelle frein | Sicherungsscheibe | arruela de pressão | arandela seguridad |
| 20 | **12E000010** | 13 | Lockwasher | rondelle frein | Sicherungsscheibe | arruela de pressão | arandela seguridad |
| 21 | **14D000010** | 13 | Nut | écrou | Mutter | porca | tuerca |
| 22 | §--------- | 6 | Spacer | entretoise | Distanzteil | espaçador | espaciador |
| 23 | **17C000412** | 5 | Bolt | boulon | Bolzen | parafuso | bulón |
| 24 | **24E000004** | 5 | Lockwasher | rondelle frein | Sicherungsscheibe | arruela de pressão | arandela seguridad |
| 25 | **2524589** | 1 | Hourmeter | compteur dheures | Stundenzähler | horímetro | cuenta-horas |

[1] Inc 22

[2] Inc 4

[3] Inc 1, 16, 17 & 25

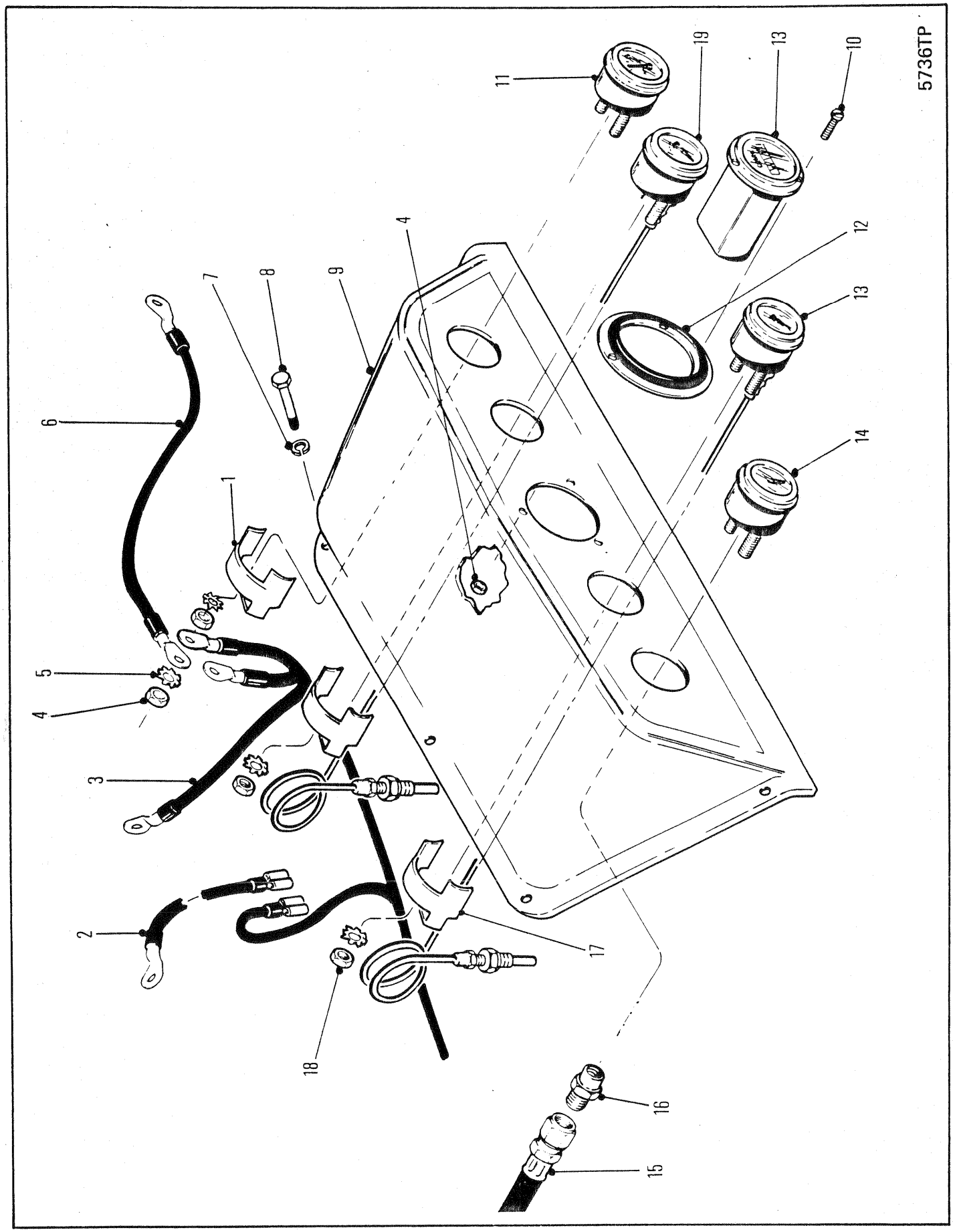
5736TP
1
2
3
4
5
6
7
8
9
10
11
12
13
14
15
16
17
18
19

# INSTRUMENT PANEL
# TABLEAU DE BORD
# INSTRUMENTENBRETT
# PAINEL DE INSTRUMENTOS
# PANEL DE INSTRUMENTOS

| No. | Part No. | Qty | Description | Description | Benennung | Descrição | Descripción |
|---|---|---|---|---|---|---|---|
| 1 | **1534136** | 4 | Bracket | support | Winkel | grampo | grampa |
| 2 | **1900460** | 1 | Jumper wire | fil volant | Schaltdraht | cabo jumper | alambre del conec |
| 3 | **1906032** | 1 | Jumper wire | fil volant | Schaltdraht | cabo jumper | alambre del conec |
| 4 | **12D000006** | 2 | Nut | écrou | Mutter | porca | tuerca |
| 5 | **12E000006** | 2 | Lockwasher | rondelle frein | Sicherungsscheibe | arruela de pressão | arandela seguridad |
| 6 | **1905778** | 1 | Wire | fil | Draht | fio | cable |
| 7 | **24E000004** | 5 | Lockwasher | rondelle frein | Sicherungsscheibe | arruela de pressão | arandela seguridad |
| 8 | **17C000412** | 5 | Bolt | boulon | Bolzen | parafuso | bulón |
| 9 | **1902847** | 1 | Panel | panneau | Tafel | painel | panel |
| 10 | **85G000605** | 6 | Screw | vis | Schraube | parafuso | tornillo |
| 11 | **1798568** | 1 | Gauge ammeter | jauge de lampmtre | Ampremeter | cal do amperímetro | amperimetro |
| 12 | **551251** | 1 | Damper vibration | amortisseur vibr | Schwingungsdampter | amortecedor vibr | amortiguador vibr |
| 13 | **1801087** | 1 | Hourmeter | compteur dheures | Stundenzähler | horímetro | cuenta-horas |
| 14 | **1922971** | 1 | Gauge oil press | jauge press huile mot | Oldruckmesser Mot | manôm óleo motor | manóm aceite motor |
| 15 | **1911507** | 1 | Hose | tuyau flexible | Schlauch | mangueira | manguera |
| 16 | **39F000003** | 1 | Adapter | adaptateur | Zwischenstück | adaptador | adaptador |
| 17 | **1991030** | 3 | Bracket | support | Winkel | grampo | grampa |
| 18 | **1991031** | 3 | Nut | écrou | Mutter | porca | tuerca |
| 19 | **1922969** | 1 | Gauge conv temp | jauge convertisseur | Tempmssr Drehmwndlr | termtro conversor | termtro convertidor |

666CUM 500E-101-CAC→500G-9999-CAC
666GM 513E-101-CAC→513G-9999-CAC
666GMGR 515A-101-CAC→515A-9999-CAC

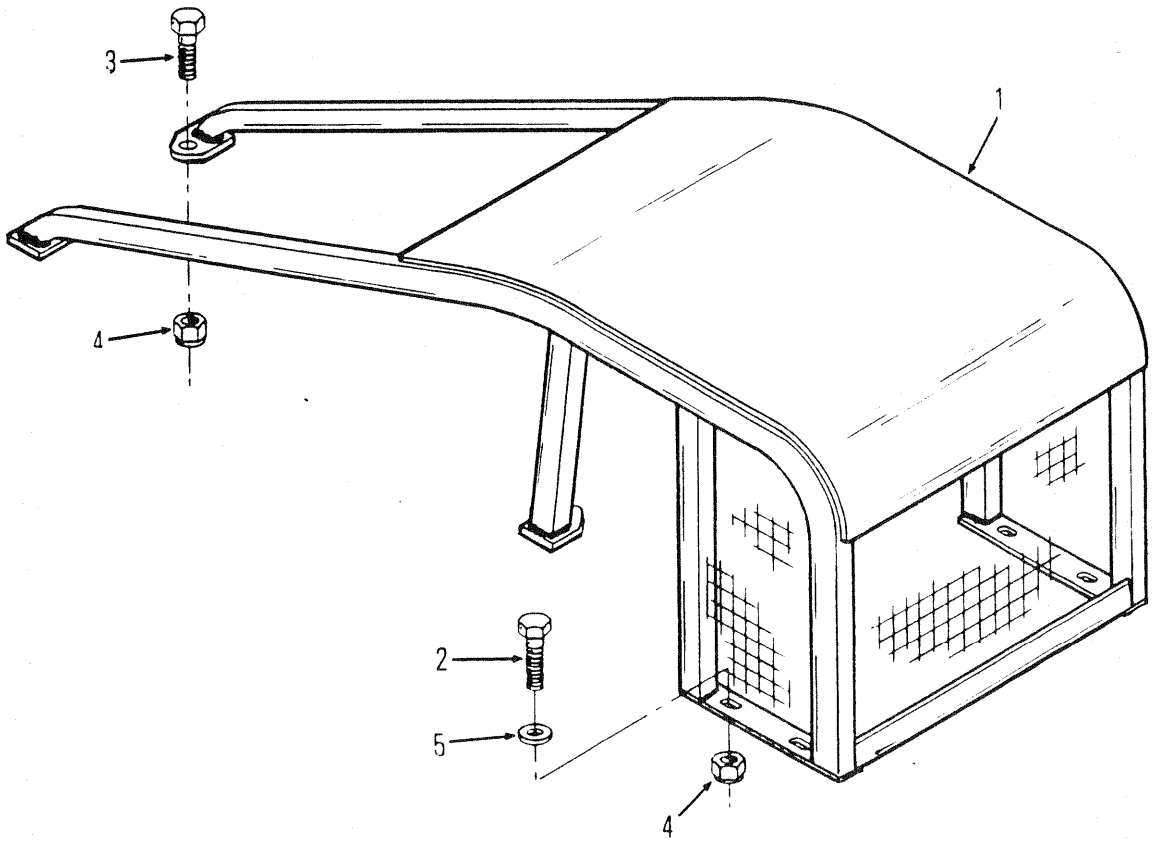


5813TP

# CANOPY
# DAIS
# SCHUTZDACH
# DOSSEL
# DOSEL

| No. | Part No. | Qty | Description | Description | Benennung | Descrição | Descripción |
|---|---|---|---|---|---|---|---|
| 1 | **1901000** | 1 | Canopy | dais | Schutzdach | dossel | dosel |
| 2 | **17C001024** | 8 | Bolt | boulon | Bolzen | parafuso | bulón |
| 3 | **17C001028** | 8 | Bolt | boulon | Bolzen | parafuso | bulón |
| 4 | **17D000009** | 16 | Nut | écrou | Mutter | porca | tuerca |
| 5 | **25E000017** | 16 | Washer | rondelle | Scheibe | arruela | arandela |

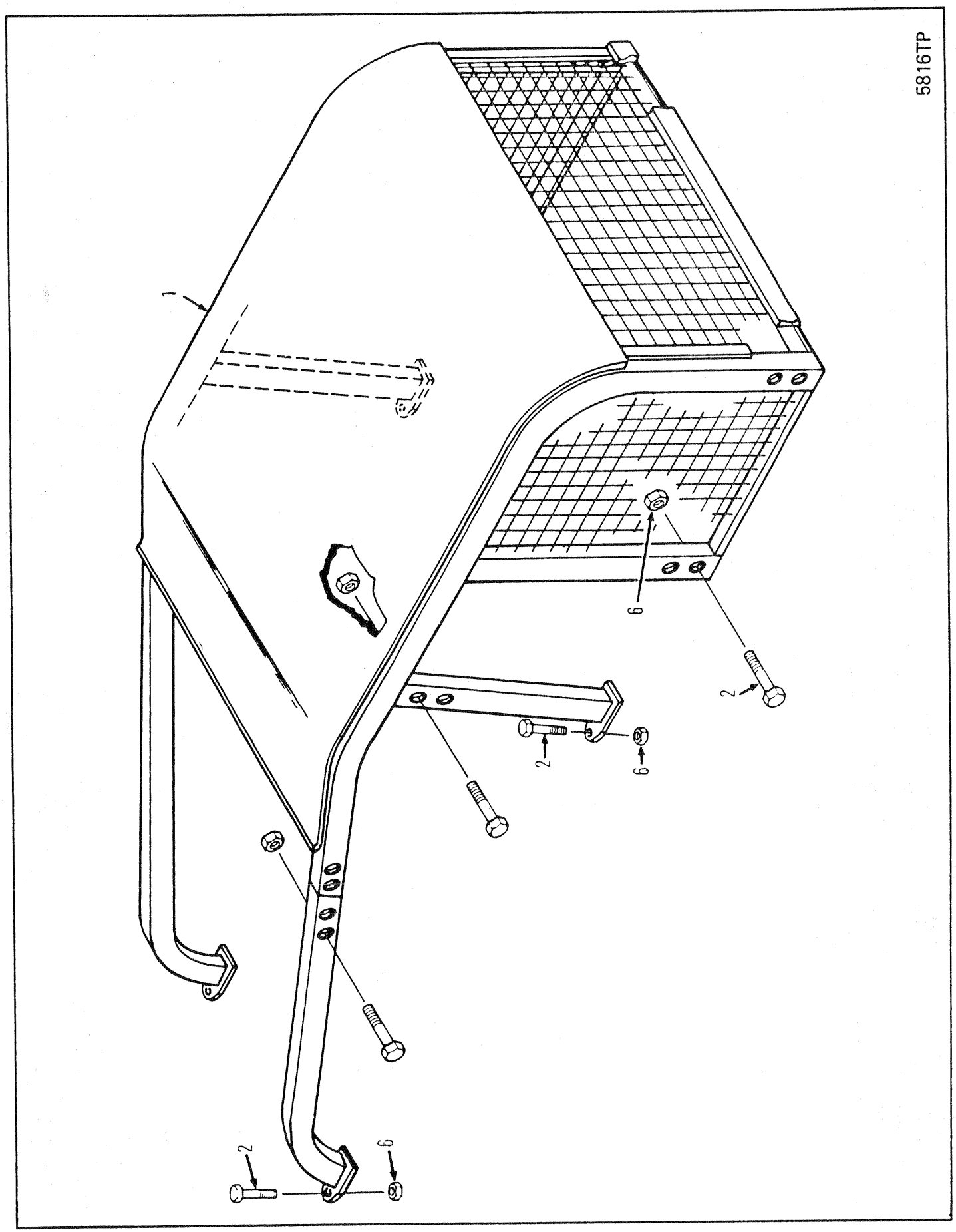
5816TP
1
6
2
2
6
2
6

# CANOPY
# DAIS
# SCHUTZDACH
# DOSSEL
# DOSEL

| No. | Part No. | Qty | Description | Description | Benennung | Descrição | Descripción |
|---|---|---|---|---|---|---|---|
| 1 | **1909614** | 1 | Canopy assy | ens dais | Schutzdach vollst | conj dossel | conj dosel |
| 2 | **17C001028** | 19 | Bolt | boulon | Bolzen | parafuso | bulón |
| 3 | †**17C001032** | 8 | Bolt | boulon | Bolzen | parafuso | bulón |
| 4 | †**17C001048** | 10 | Bolt | boulon | Bolzen | parafuso | bulón |
| 5 | †**17C001064** | 8 | Bolt | boulon | Bolzen | parafuso | bulón |
| 6 | **17D000009** | 12 | Nut | écrou | Mutter | porca | tuerca |

666GM 513E-101-CAC➡513G-9999-CAC
666GMGR 515A-101-CAC➡515A-9999-CAC

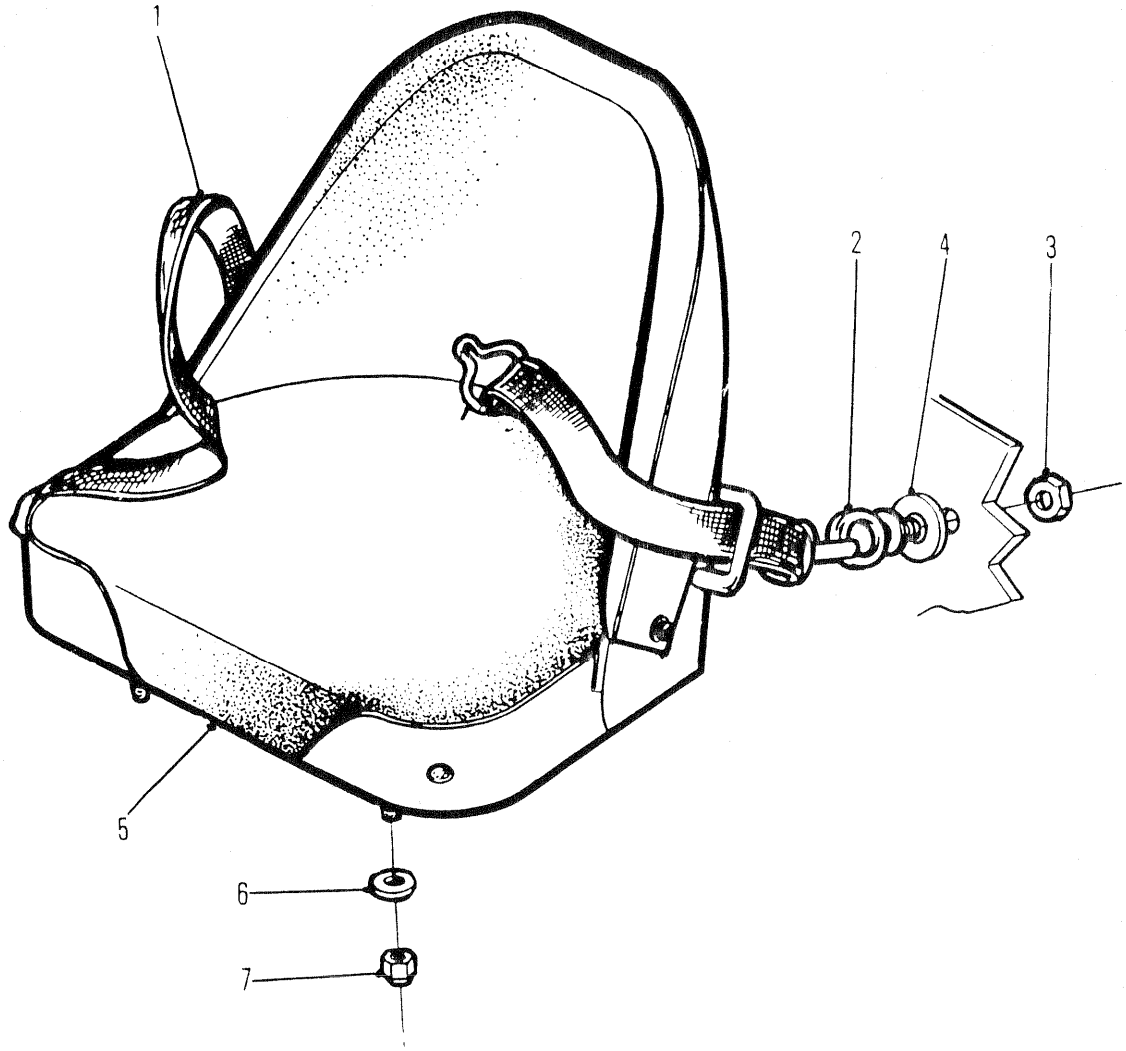


5827TP

# SEAT ASSEMBLY
# SIÈGE, ENSEMBLE
# SITZ VOLLSTÄNDIG
# ASSENTO, CONJUNTO
# ASIENTO, CONJUNTO

| No. | Part No. | Qty | Description | Description | Benennung | Descrição | Descripción |
|---|---|---|---|---|---|---|---|
| A | [1,2]1908858 | 1 | Seat assy | siège ens | Sitz vollst | assento conj | asiento conj |
| 1 | 2522107 | 1 | Belt | courroie | Riemen | correia | correa |
| 2 | 2522745 | 2 | Bolt | boulon | Bolzen | parafuso | bulón |
| 3 | 60D000007 | 2 | Nut | écrou | Mutter | porca | tuerca |
| 4 | 2522744 | 2 | Washer | rondelle | Scheibe | arruela | arandela |
| 5 | 1991831 | 1 | Cushion seat | coussin siege | Sitzkissen | almofada assento | cojin asiento |
| 6 | 25E000015 | 4 | Washer | rondelle | Scheibe | arruela | arandela |
| 7 | 59D000005 | 4 | Nut | écrou | Mutter | porca | tuerca |

[1] Inc 5

[2] Ref RSG 334. For service replacement of complete seat assembly, order 1935739 seat. Ref Group F2 40300.
[2] Réf RSG 334. Pour le remplacement, de l'ensemble siège complet, commander le siège 1935739. Groupe de réf F2 40300.
[2] Ref RSG 334. Zum Ersatz der vollständigen Sitzeinheit bestelle man Sitz 1935739. Referenzgruppe F2 40300.
[2] Ref RSG 334. Para reposição compléta do conjunto do assento, ordene assento 1935739. Grupode referencia F2 40300.
[2] Ref RSG 334. Para el servicio de reemplazo del conjunto de asiento completo, ordene asiento 1935739. Referirse a Grupo F2 40300.

666CUM 500D-101-CAC→500G-9999-CAC
666GM 513E-101-CAC→513G-9999-CAC

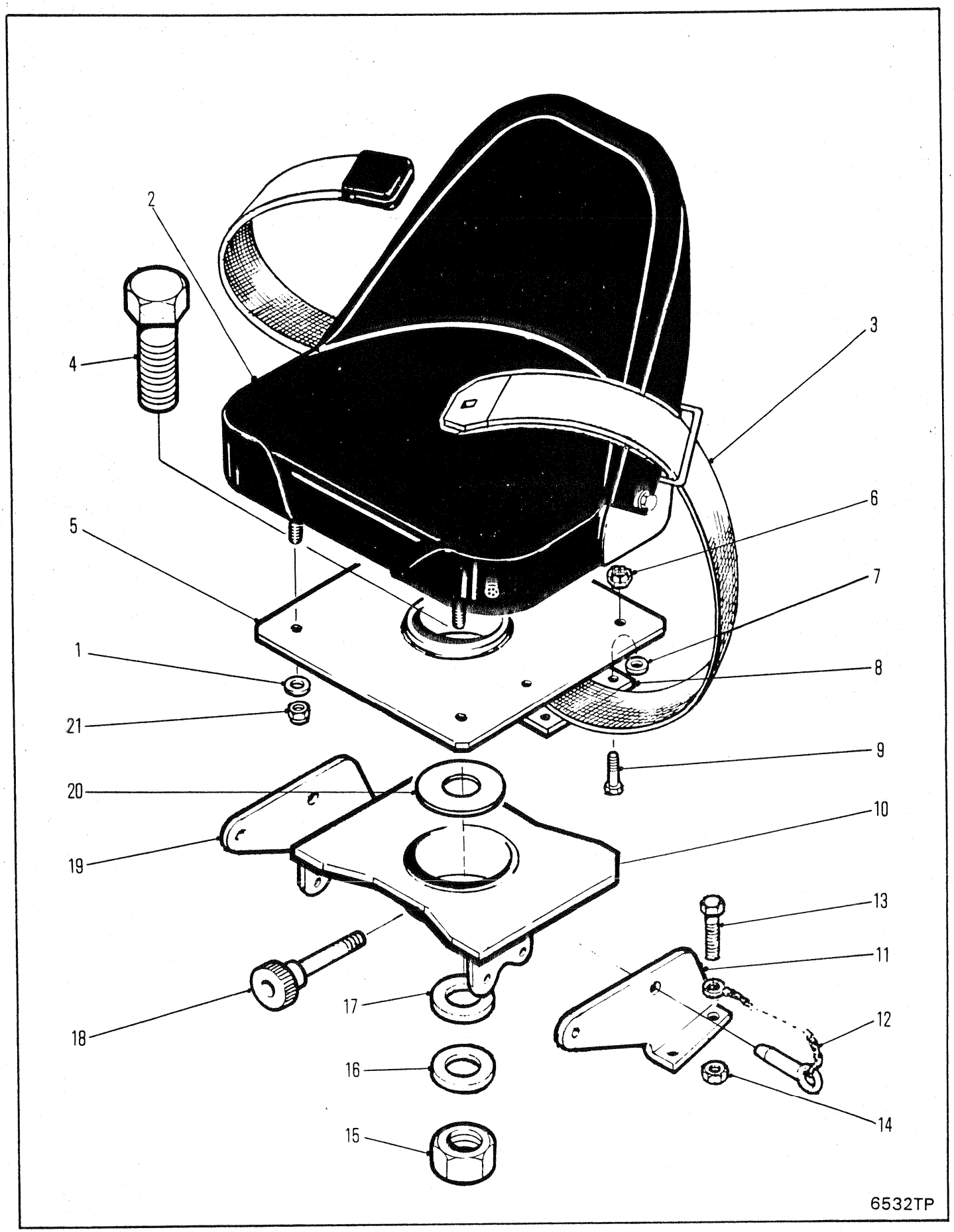
2
4
3
5
6
7
1
8
21
9
20
10
19
13
11
18
17
12
16
14
15
6532TP

# SEAT ASSEMBLY, ROTATING
# ENSEMBLE DE SIÈGE ROTATIF
# DREHSITZ VOLLSTÄNDIG
# CONJUNTO DE ASSENTO ROTATIVO
# CONJUNTO DE ASIENTO ROTATORIO

| No. | Part No. | Qty | Description | Description | Benennung | Descrição | Descripción |
|---|---|---|---|---|---|---|---|
| A | [1,2]1908858 | 1 | Seat assy | siège ens | Sitz vollst | assento conj | asiento conj |
| 1 | 25E000015 | 4 | Washer | rondelle | Scheibe | arruela | arandela |
| 2 | 1991831 | 1 | Cushion seat | coussin siege | Sitzkissen | almofada assento | cojin asiento |
| 3 | 1926962 | 1 | Seat belt | courroie du siège | Sicherheitsgurt | cinto de segurança | cint seguridad |
| 4 | 17C002048 | 1 | Bolt | boulon | Bolzen | parafuso | bulón |
| 5 | 1913569 | 1 | Plate seat | siège de la plaque | Plattensitz | assento da chapa | asiento placa |
| 6 | 85D000005 | 4 | Nut | écrou | Mutter | porca | tuerca |
| 7 | 626787 | 4 | Spacer | entretoise | Distanzteil | espaçador | espaciador |
| 8 | 1913583 | 2 | Retainer | arrêtoir | Halterung | retentor | retén |
| 9 | 17C000520 | 4 | Bolt | boulon | Bolzen | parafuso | bulón |
| 10 | 1913567 | 1 | Seat support | support sièege | Sitzabstützung | suporte assento | soporte asiento |
| 11 | 1917430 | 1 | Bracket LH | support CG | Winkel L | grampo LE | grampa LD |
| 12 | 1909699 | 2 | Chain&faspin | chane et goupille | Kette & Faspin | corr e pino prend | cadena y horq |
| 13 | 17C000824 | 6 | Bolt | boulon | Bolzen | parafuso | bulón |
| 14 | 59D000008 | 6 | Nut | écrou | Mutter | porca | tuerca |
| 15 | 59D000020 | 1 | Nut | écrou | Mutter | porca | tuerca |
| 16 | 1913574 | 1 | Washer | rondelle | Scheibe | arruela | arandela |
| 17 | ‡1525766 | - | Washer | rondelle | Scheibe | arruela | arandela |
| 18 | 1914075 | 1 | Seat lock | serrure du siège | Sitzsperre | trava do assento | seguro del asiento |
| 19 | 1917429 | 1 | Bracket RH | support CD | Winkel R | grampo LD | grampa LD |
| 20 | 1913575 | 1 | Shim | cale | Beilage | calço | planchita |
| 21 | 85D000005 | 4 | Nut | écrou | Mutter | porca | tuerca |

[1] Inc 2

[2] Ref RSG 334. For service replacement of complete seat assembly, order 1935739 seat. Ref Group F2 40300.
[2] Réf RSG 334. Pour le remplacement, de l'ensemble siège complet, commander le siège 1935739. Groupe de réf F2 40300.
[2] Ref RSG 334. Zum Ersatz der vollständigen Sitzeinheit bestelle man Sitz 1935739. Referenzgruppe F2 40300.
[2] Ref RSG 334. Para reposição compléta do conjunto do assento, ordene assento 1935739. Grupode referencia F2 40300.
[2] Ref RSG 334. Para el servicio de reemplazo del conjunto de asiento completo, ordene asiento 1935739. Referirse a Grupo F2 40300.

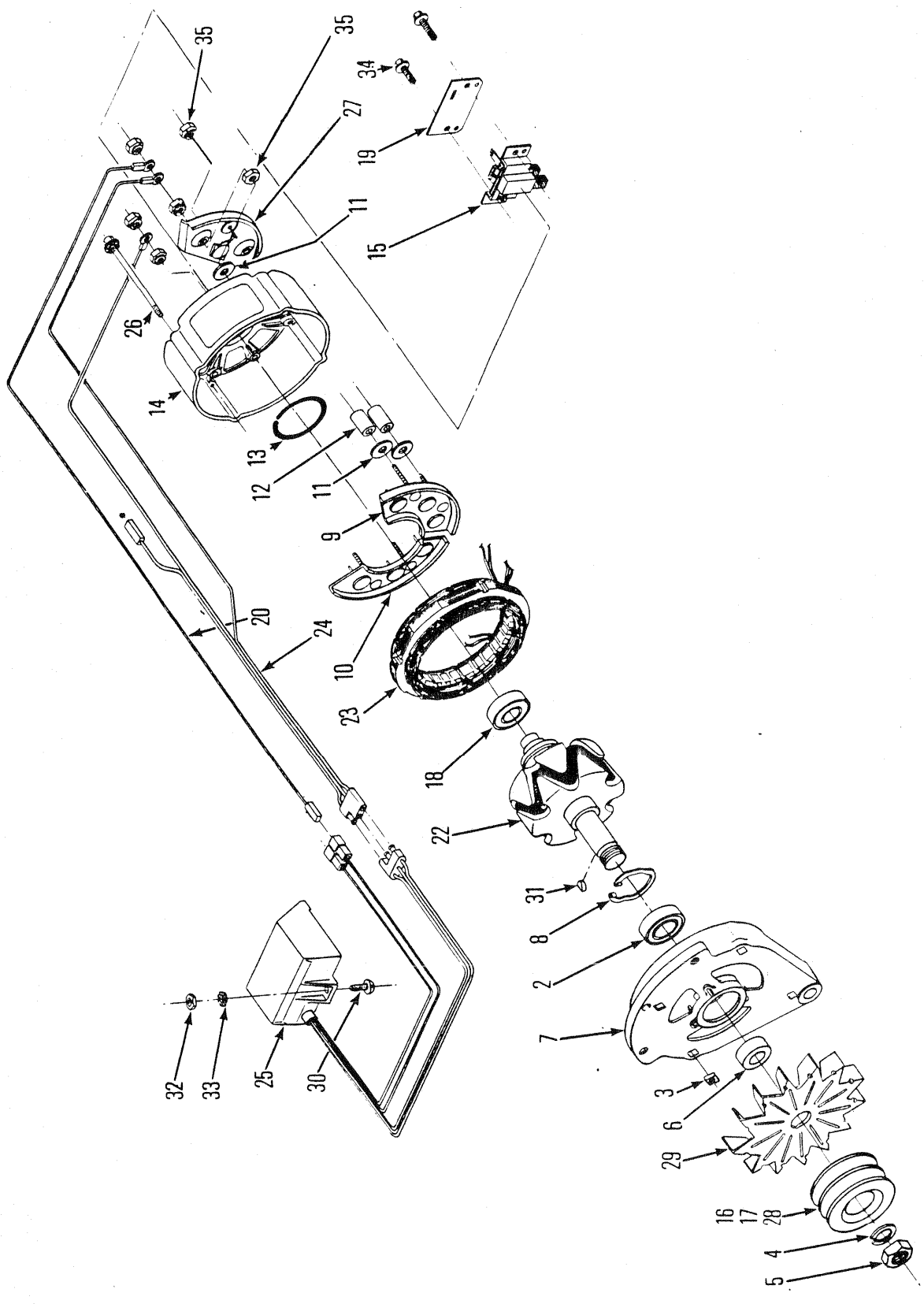
5166TP
35
35
34
27
19
11
15
26
14
13
12
11
9
20
24
10
23
18
22
31
8
2
7
3
6
29
16
17
28
4
5
32
33
25
30

# ALTERNATOR
# ALTERNATEUR
# ALTERNATOR
# ALTERNADOR
# ALTERNADOR

| No. | Part No. | Qty | Description | Description | Benennung | Descrição | Descripción |
|---|---|---|---|---|---|---|---|
| A | [1]1907943 | 1 | Alternator assy | ass de lalternat | Lichtmasch Einheit | conj do alternador | conj del altern |
| 1 | O--------- | - | Belt | courroie | Riemen | correia | correa |
| 2 | 784950 | 1 | Bearing | palier | Lager | mancal | cojinete |
| 3 | 853847 | 4 | Nut | écrou | Mutter | porca | tuerca |
| 4 | 896978 | 1 | Lockwasher | rondelle frein | Sicherungsscheibe | arruela de pressão | arandela seguridad |
| 5 | 896979 | 1 | Nut | écrou | Mutter | porca | tuerca |
| 6 | 896982 | 1 | Fan Spacer | ventil entretoise | Vent Distanzteil | vent espaçador | vent espaciador |
| 7 | 896983 | 1 | Housing | botier | Gehuse | carcaça | carcasa |
| 8 | 896985 | 1 | Retainer | arrêtoir | Halterung | retentor | retén |
| 9 | 896988 | 1 | Diode | diode | Diode | diodo | diodo |
| 10 | 896989 | 1 | Diode | diode | Diode | diodo | diodo |
| 11 | 896990 | 4 | Washer | rondelle | Scheibe | arruela | arandela |
| 12 | 896991 | 2 | Sleeve | manchon | Muffe | luva | manguito |
| 13 | 896992 | 1 | Retainer | arrêtoir | Halterung | retentor | retén |
| 14 | 896993 | 1 | Housing | botier | Gehuse | carcaça | carcasa |
| 15 | [2]896994 | 1 | Brush assy | ass de la brosse | Bürsteneinheit | conj de escovas | conj escobilla |
| 16 | [4]1917720 | 1 | Pulley | poulie | Riemenscheibe | polia | polea |
| 17 | [3]1914217 | 1 | Pulley | poulie | Riemenscheibe | polia | polea |
| 18 | 1309108 | 1 | Bearing | palier | Lager | mancal | cojinete |
| 19 | [5]§------- | 1 | Cover | couvercle | Deckel | tampa | tapa |
| 20 | 1916142 | 1 | Wire | fil | Draht | fio | cable |
| 21 | O------- | - | Alt belt | Courroie dalternateur | Alternatorriemen | Correia do alternador | Correa del alternador |
| 22 | 1990106 | 1 | Rotor | rotor | Rotor | rotor | rotor |
| 23 | 1990109 | 1 | Stator | stator | Stator | estator | estator |
| 24 | 1990134 | 1 | Cable | câble | Kabel | cabo | cable |
| 25 | 1990135 | 1 | Regulator | régulateur | Regler | regulador | regulador |

[1] Inc 1➡5, 7➡18, 22➡24, 26, 27, 29, 31, 34 & 35

[2] Inc 19

[3] □500E-461-CAC&➡. Double Groove
[3] □500E-461-CAC&➡. Rainure double
[3] □500E-461-CAC&➡. Nute doppelt
[3] □500E-461-CAC&➡. Feda dupla
[3] □500E-461-CAC&➡. Ranura doble

[4] I inch Single Groove
[4] Rainure simple Î a1«a2
[4] Nute, einfach, Ï a1«a2
[4] Fenda Simples de Ì polegada
[4] Ranura simple de Ì plg.

[5] See item 15
[5] Voir 15
[5] Siehe 15
[5] Veja 15
[5] Véase 15

[6] I inch Single Groove
[6] Rainure simple Î a1«a2
[6] Nute, einfach, Ï a1«a2
[6] Fenda Simples de Ì polegada[6] Ranura simple de Ì plg.

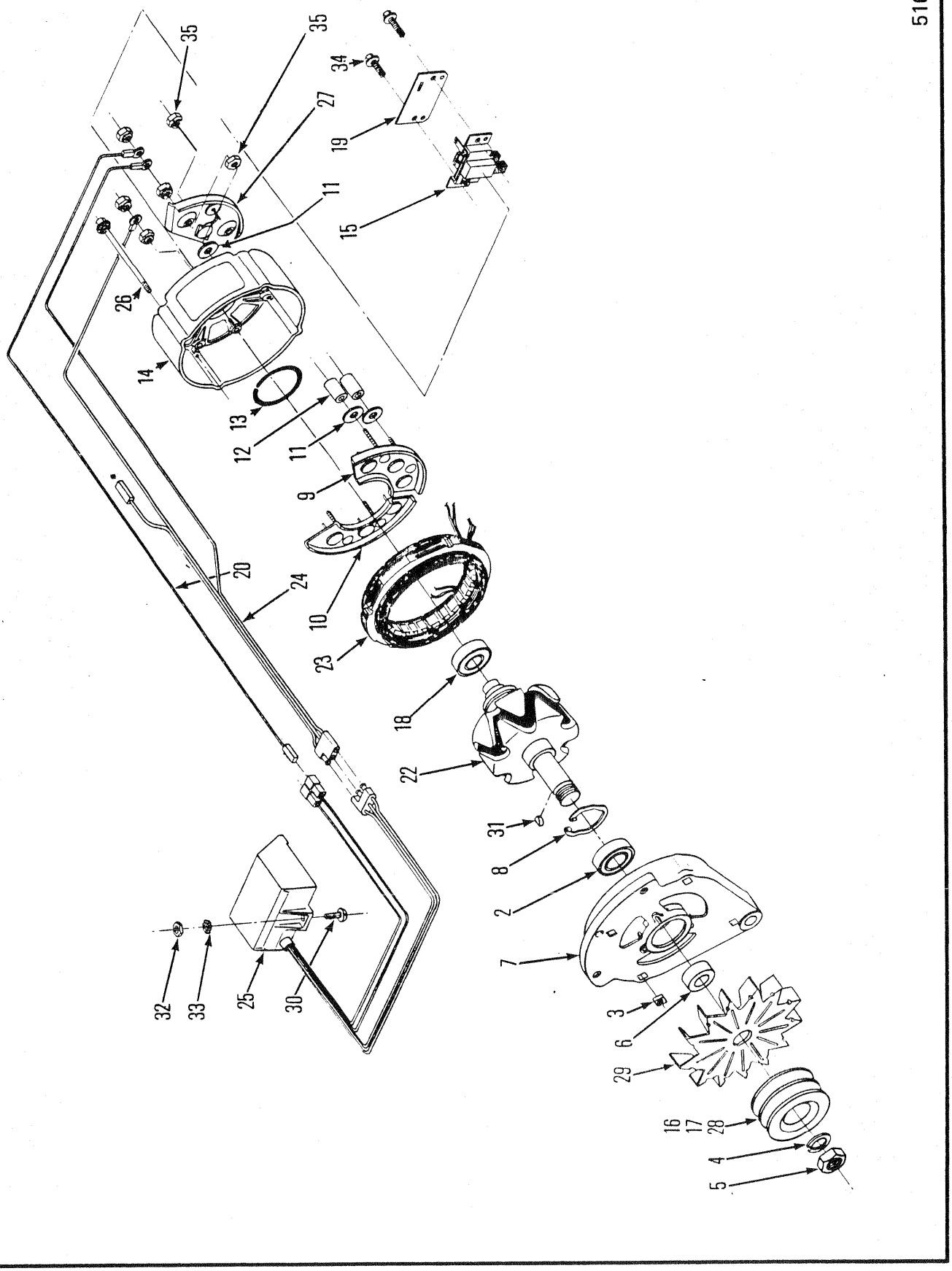
5166TP
35
35
34
27
19
11
15
26
14
13
12
11
9
10
20
24
23
18
22
31
8
2
7
3
6
29
16
17
28
4
5
32
33
25
30

# ALTERNATOR
# ALTERNATEUR
# ALTERNATOR
# ALTERNADOR
# ALTERNADOR

| No. | Part No. | Qty | Description | Description | Benennung | Descrição | Descripción |
|---|---|---|---|---|---|---|---|
| 26 | **1990194** | 4 | Bolt | boulon | Bolzen | parafuso | bulón |
| 27 | **1990196** | 1 | Diode,isolation | isolation diode | isolationsdiode | isolação do diodo | aislam diodo |
| 28 | [6]**1990300** | 1 | Pulley | poulie | Riemenscheibe | polia | polea |
| 29 | **1990503** | 1 | Fan | ventilateur | Ventilator | ventilador | ventilador |
| 30 | **3G0001010** | 3 | Bolt | boulon | Bolzen | parafuso | bulón |
| 31 | **6J0000405** | 1 | Key | clavette | Keil | chaveta | chaveta |
| 32 | **12D000010** | 3 | Nut | écrou | Mutter | porca | tuerca |
| 33 | **12E000010** | 3 | Lockwasher | rondelle frein | Sicherungsscheibe | arruela de pressão | arandela seguridad |
| 34 | **18G000812** | 2 | Bolt | boulon | Bolzen | parafuso | bulón |
| 35 | **50D000010** | 6 | Nut | écrou | Mutter | porca | tuerca |

[1] Inc 1➡5, 7➡18, 22➡24, 26, 27, 29, 31, 34 & 35

[2] Inc 19

[3] □500E-461-CAC&➡. Double Groove
[3] □500E-461-CAC&➡. Rainure double
[3] □500E-461-CAC&➡. Nute doppelt
[3] □500E-461-CAC&➡. Feda dupla
[3] □500E-461-CAC&➡. Ranura doble

[4] I inch Single Groove
[4] Rainure simple Ï a1«a2
[4] Nute, einfach, Ï a1«a2
[4] Fenda Simples de Ï polegada
[4] Ranura simple de Ï plg.

[5] See item 15
[5] Voir 15
[5] Siehe 15
[5] Veja 15
[5] Véase 15

[6] I inch Single Groove
[6] Rainure simple Î a1«a2
[6] Nute, einfach, Î a1«a2
[6] Fenda Simples de Î polegada[6] Ranura simple de Î plg.

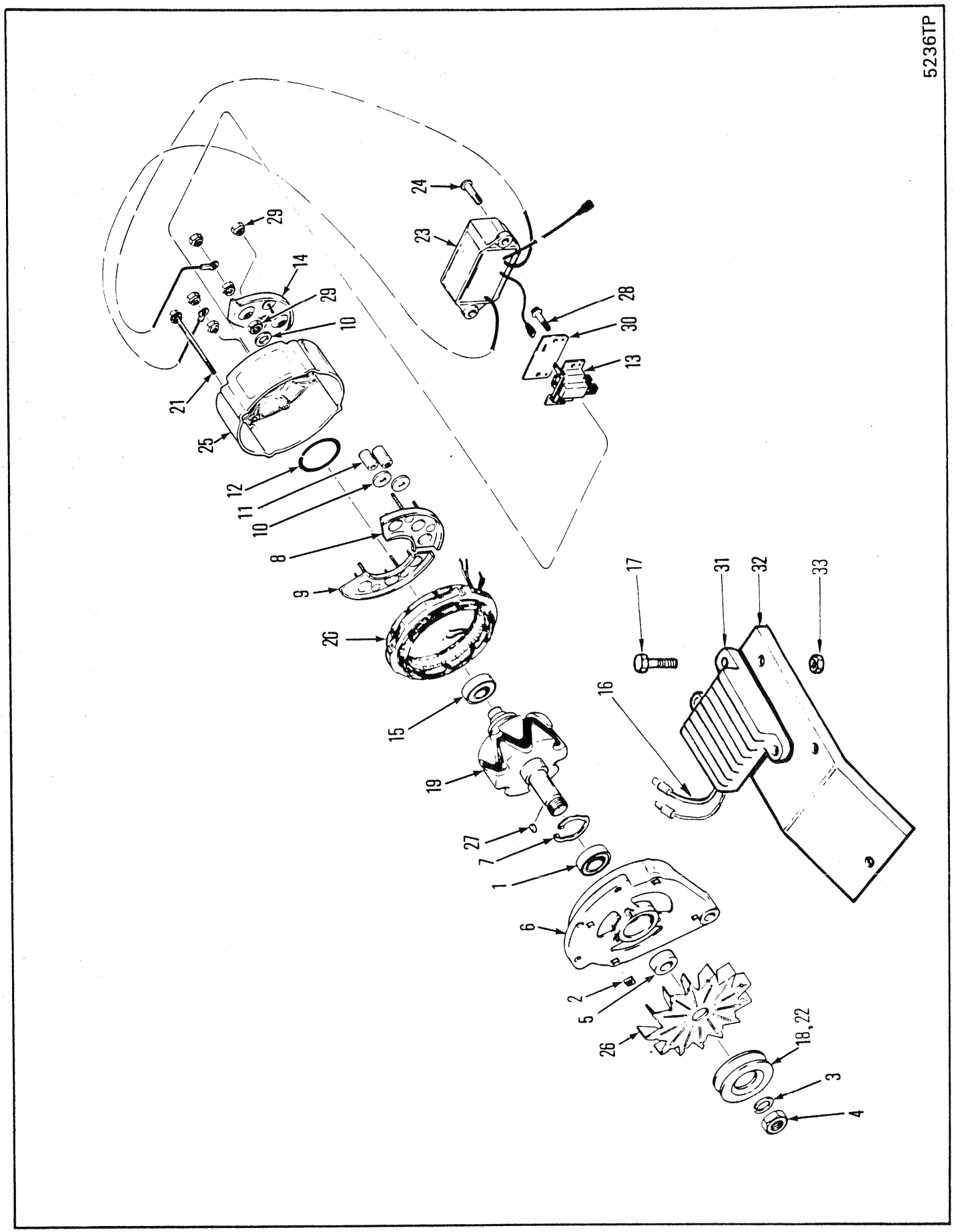
5236TP
24
23
29
14
29
10
28
30
13
21
25
12
11
10
8
9
26
15
19
27
7
1
6
2
5
26
18, 22
3
4
17
31
32
33
16

# ALTERNATOR
# ALTERNATEUR
# ALTERNATOR
# ALTERNADOR
# ALTERNADOR

| No. | Part No. | Qty | Description | Description | Benennung | Descrição | Descripción |
|---|---|---|---|---|---|---|---|
| A | [3]1907944 | 1 | Alternator assy | ass de lalternat | Lichtmasch Einheit | conj do alternador | conj del altern |
| 1 | 784950 | 1 | Bearing | palier | Lager | mancal | cojinete |
| 2 | 853847 | 4 | Nut | écrou | Mutter | porca | tuerca |
| 3 | 896978 | 1 | Lockwasher | rondelle frein | Sicherungsscheibe | arruela de pressão | arandela seguridad |
| 4 | 896979 | 1 | Nut | écrou | Mutter | porca | tuerca |
| 5 | 896982 | 1 | Spacer | entretoise | Distanzteil | espaçador | espaciador |
| 6 | 896983 | 1 | Housing | botier | Gehuse | carcaça | carcasa |
| 7 | 896985 | 1 | Retainer | arrêtoir | Halterung | retentor | retén |
| 8 | 896988 | 1 | Diode | diode | Diode | diodo | diodo |
| 9 | 896989 | 1 | Diode | diode | Diode | diodo | diodo |
| 10 | 896990 | 4 | Washer | rondelle | Scheibe | arruela | arandela |
| 11 | 896991 | 2 | Sleeve | manchon | Muffe | luva | manguito |
| 12 | 896992 | 1 | Retainer | arrêtoir | Halterung | retentor | retén |
| 13 | [1]896994 | 1 | Brush assy | ass de la brosse | Bürsteneinheit | conj de escovas | conj escobilla |
| 14 | 990932 | 1 | Isolation diode | isolation diode | Isolationsdiode | isolação do diodo | aislam diodo |
| 15 | 1309108 | 1 | Bearing | palier | Lager | mancal | cojinete |
| 16 | 1303213 | 1 | Wire assy | fil ens | Draht Ens | fio conj | cable conj |
| 17 | 17C000612 | 1 | Bolt | boulon | Bolzen | parafuso | bulón |
| 18 | [2]†1990105 | 1 | Pulley | poulie | Riemenscheibe | polia | polea |
| 19 | 1990106 | 1 | Rotor | rotor | Rotor | rotor | rotor |
| 20 | 1990109 | 1 | Stator | stator | Stator | estator | estator |
| 21 | 1990194 | 4 | Bolt | boulon | Bolzen | parafuso | bulón |
| 22 | [4]1990300 | 1 | Pulley | poulie | Riemenscheibe | polia | polea |
| 23 | 1991937 | 1 | Voltage regulator | régulateur tension | Spannungsregler | regulador voltagem | regulador voltaje |
| 24 | 1990501 | 3 | Bolt | boulon | Bolzen | parafuso | bulón |
| 25 | 1990502 | 1 | Housing | botier | Gehuse | carcaça | carcasa |
| 26 | 1990503 | 1 | Fan | ventilateur | Ventilator | ventilador | ventilador |
| 27 | 6J000405 | 1 | Key | clavette | Keil | chaveta | chaveta |
| 28 | 18G000812 | 2 | Bolt | boulon | Bolzen | parafuso | bulón |
| 29 | 50D000010 | 6 | Nut | écrou | Mutter | porca | tuerca |
| 30 | [5]§--------- | 1 | Cover | couvercle | Deckel | tampa | tapa |
| 31 | 1917496 | 1 | Load dump | bascul de chargemt | Lade-Kippvorrichtung | descarga de la presión | disposit carga entulhr |
| 32 | 1917836 | 1 | Bracket | support | Winkel | grampo | grampa |
| 33 | 59D000006 | 1 | Nut | écrou | Mutter | porca | tuerca |
| 34 | ○--------- | - | Alt belt | Courroie dalternateur | Alternatorriemen | Correia do alternador | Correa del alternador |

[1] Inc 30

[2] □500E-835➡837, 838➡843-CAC, 500E-461➡834, 838➡844-CAC

[3] Inc 1➡15, 19➡21, 24➡30

[4] Double groove
[4] Gorge doubel
[4] Doppelnut
[4] Canelura dupla
[4] Muesca doble

[5] See item 13
[5] Voir 13
[5] Siehe 13
[5] Veja 13
[5] Véase 13

| | |
|---|---|
| 666CUM | 500E-101-CAC➡500G-9999-CAC |
| 666GM | 513E-101-CAC➡513G-9999-CAC |
| 666GMGR | 515A-101-CAC➡515A-9999-CAC |

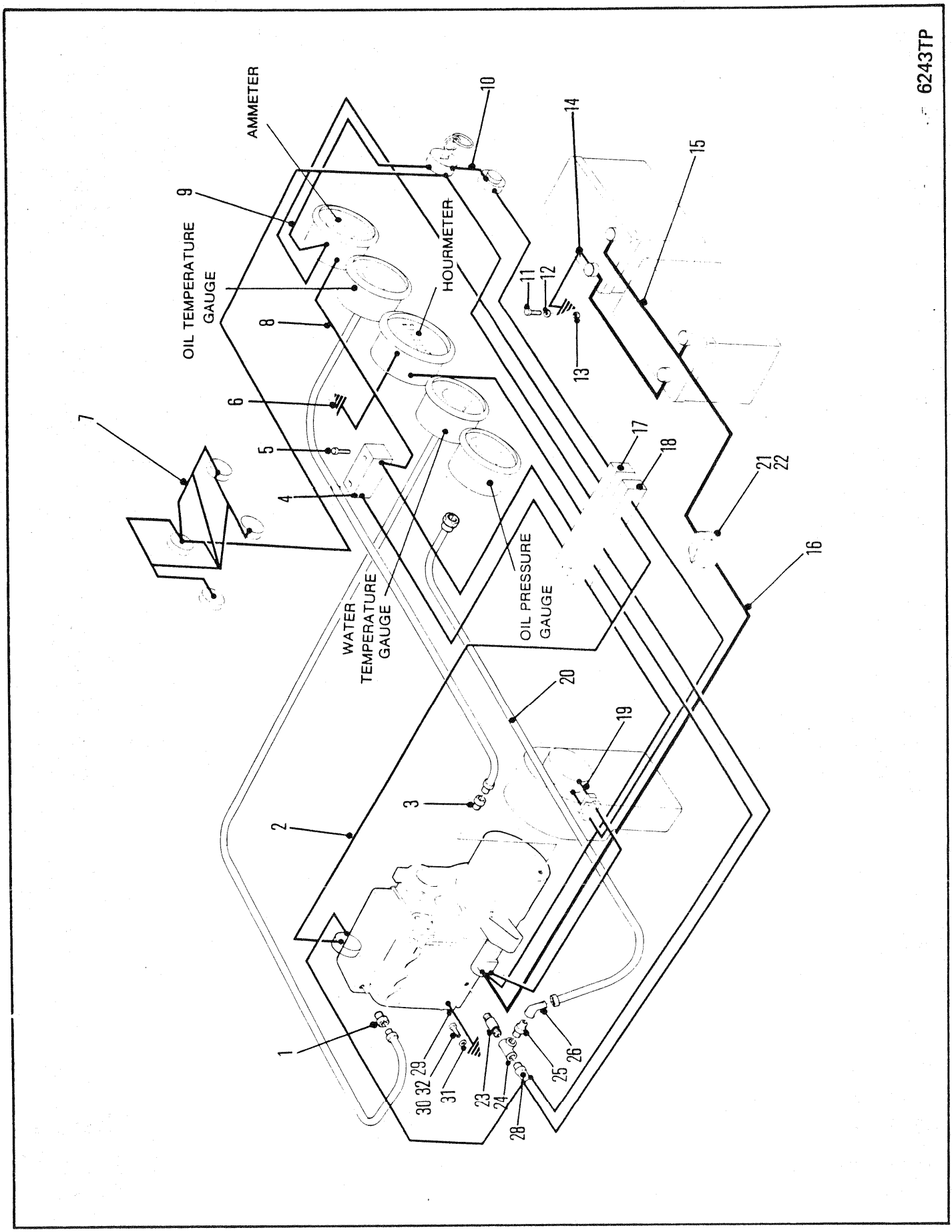
6243TP
AMMETER
OIL TEMPERATURE GAUGE
HOURMETER
WATER TEMPERATURE GAUGE
OIL PRESSURE GAUGE
1
2
3
4
5
6
7
8
9
10
11
12
13
14
15
16
17
18
19
20
21
22
23
24
25
26
28
29
30
31
32

# ELECTRICAL SYSTEM
# SYSTÈME ELECTRIQUE
# ELEKTRISCHE ANLAGE
# SISTÈMA ELECTRICO
# SISTEMA ELECTRICO

| No. | Part No. | Qty | Description | Description | Benennung | Descrição | Descripción |
|---|---|---|---|---|---|---|---|
| 1 | **19F000009** | 1 | Bushing | chemise | Buchse | bucha | buje |
| 2 | **1905779** | 1 | Wire assy | fil ens | Draht Ens | fio conj | cable conj |
| 3 | **19F000009** | 1 | Bushing | chemise | Buchse | bucha | buje |
| 4 | **1902275** | 1 | Circuit breaker | disjoncteur | Sicherungsautomat | disjuntor | cortacircuitos |
| 5 | **85G000816** | 2 | Bolt | boulon | Bolzen | parafuso | bulón |
| 6 | **1900460** | 1 | Wire assy | fil ens | Draht Ens | fio conj | cable conj |
| 7 | [1]--------- | - | Light | lampe | Licht | lâmpada | lámpara |
| 8 | **1906032** | 1 | Wire assy | fil ens | Draht Ens | fio conj | cable conj |
| 9 | **1905778** | 1 | Wire assy | fil ens | Draht Ens | fio conj | cable conj |
| 10 | **658487** | 1 | Wire assy | fil ens | Draht Ens | fio conj | cable conj |
| 11 | **17C000816** | 1 | Bolt | boulon | Bolzen | parafuso | bulón |
| 12 | **25E000021** | 1 | Flatwasher | rondelle plate | Unterlegscheibe | arruela chata | arandela plana |
| 13 | **17D000006** | 1 | Nut | écrou | Mutter | porca | tuerca |
| 14 | **1917034** | 1 | Cable | câble | Kabel | cabo | cable |
| 15 | **1917035** | 1 | Cable | câble | Kabel | cabo | cable |
| 16 | **1917008** | 1 | Cable | câble | Kabel | cabo | cable |
| 17 | **1911508** | 1 | Wire harness | harnais fils | Kabelbaum | chicote fiação | mazo de cables |
| 18 | **1911511** | 1 | Wire harness | harnais fils | Kabelbaum | chicote fiação | mazo de cables |
| 19 | **1909992** | 1 | Wire assy | fil ens | Draht Ens | fio conj | cable conj |
| 20 | **1911507** | 1 | Tube assy | assemblage de tube | Rohreinheit | conjunto de tubos | conjunto del tubo |
| 21 | **754019** | 1 | Switch | interrupteur | Schalter | interruptor | interruptor |
| 22 | †**1901749** | 1 | Face plate | plaque desurface | frontplatte | chapa da sup | placa de frente |
| 23 | **5K0000108** | 1 | Nipple | raccord | Nippel | niple | niple |
| 24 | **18F000001** | 1 | Tee | raccord T | T-Verbindungsstück | te | te |
| 25 | **38F000003** | 1 | Adaptor | adaptateur | Zwischenstück | adaptador | adaptador |
| 26 | **25F000001** | 1 | Elbow | coude | Winkelrohr | cotovêlo | codo |
| 27 | †**39F000003** | 1 | Adaptor | adaptateur | Zwischenstück | adaptador | adaptador |
| 28 | **636260** | 1 | Switch | interrupteur | Schalter | interruptor | interruptor |
| 29 | **1917036** | 1 | Ground strap | ligne de masse | Massestriefen | guarn de terra | flete de tierra |
| 30 | **17C000614** | 1 | Bolt | boulon | Bolzen | parafuso | bulón |
| 31 | **24E000006** | 2 | Lockwasher | rondelle frein | Sicherungsscheibe | arruela de pressão | arandela seguridad |
| 32 | **18C000612** | 1 | Bolt | boulon | Bolzen | parafuso | bulón |
| 33 | [2]†**551530** | 1 | Switch | interrupteur | Schalter | interruptor | interruptor |
| 34 | [2]†**1530361** | 1 | Wire harness | harnais fils | Kabelbaum | chicote fiação | mazo de cables |
| 35 | [2]†**1537934** | 1 | Bracket | support | Winkel | grampo | grampa |
| 36 | [2]†**18C000412** | 2 | Bolt | boulon | Bolzen | parafuso | bulón |
| 37 | [2]†**59D000001** | 2 | Nut | écrou | Mutter | porca | tuerca |

[1] Ref F2 90500

[2] □513F-1535-CAC&➡ Ref RSG 166

666GM 513E-101-CAC➡513G-9999-CAC
666GMGR 515A-101-CAC➡515A-9999-CAC

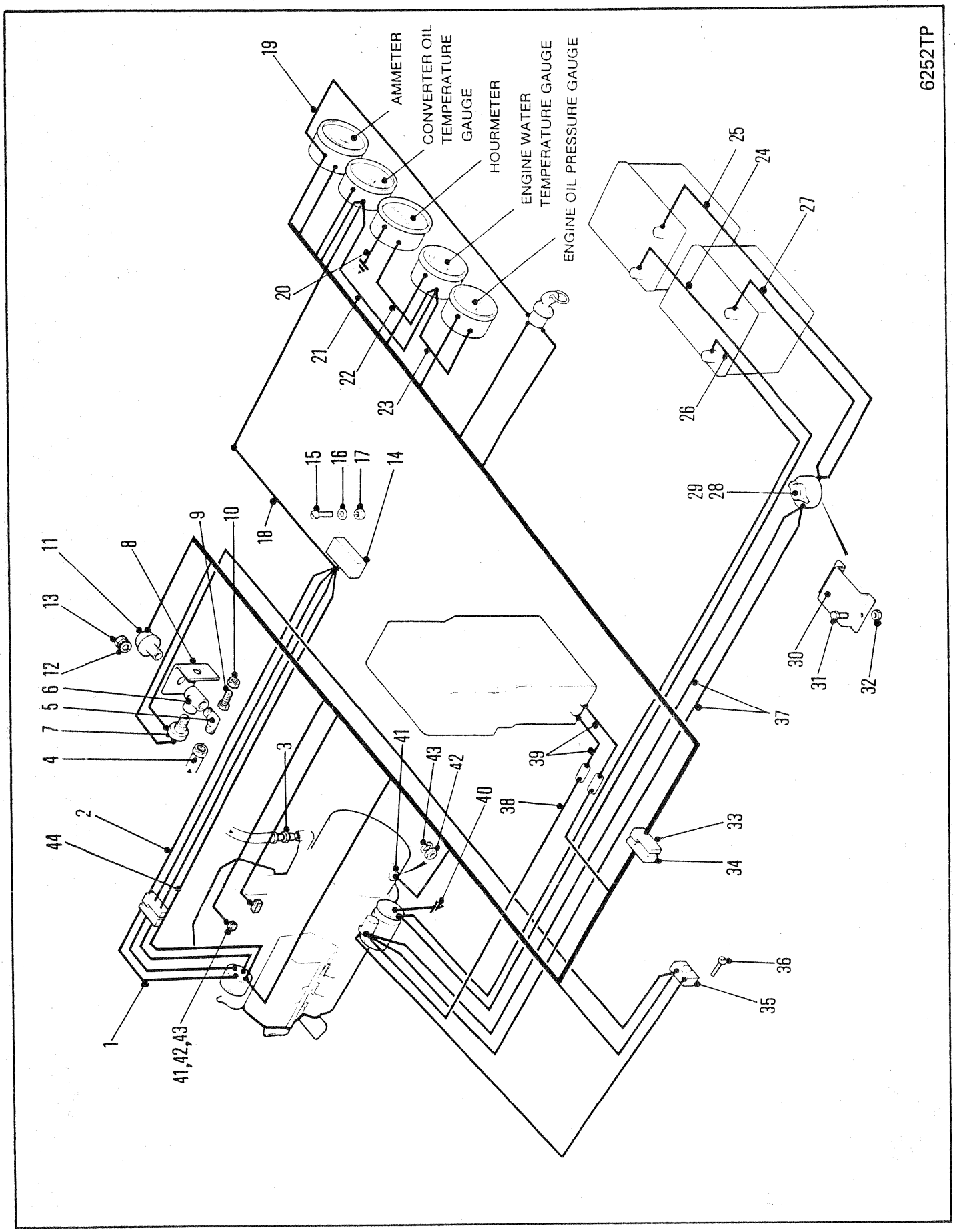
6252TP
AMMETER
CONVERTER OIL TEMPERATURE GAUGE
HOURMETER
ENGINE WATER TEMPERATURE GAUGE
ENGINE OIL PRESSURE GAUGE
1
2
3
4
5
6
7
8
9
10
11
12
13
14
15
16
17
18
19
20
21
22
23
24
25
26
27
28
29
30
31
32
33
34
35
36
37
38
39
40
41
42
43
44
41,42,43

# ELECTRICAL SYSTEM
# SYSTÈME ELECTRIQUE
# ELEKTRISCHE ANLAGE
# SISTÈMA ELECTRICO
# SISTEMA ELECTRICO

| No. | Part No. | Qty | Description | Description | Benennung | Descrição | Descripción |
|---|---|---|---|---|---|---|---|
| 1 | [1]--------- | 1 | Wire assy | fil ens | Draht Ens | fio conj | cable conj |
| 2 | [1]--------- | 1 | Wire assy | fil ens | Draht Ens | fio conj | cable conj |
| 3 | **89F000003** | 1 | Connector | raccord | Verbindungsstück | ligador | conector |
| 4 | **1902371** | 1 | Hose | tuyau flexible | Schlauch | mangueira | manguera |
| 5 | **83F000003** | 1 | Elbow | coude | Winkelrohr | cotovêlo | codo |
| 6 | **18F000001** | 1 | Tee | raccord T | T-Verbindungsstück | te | te |
| 7 | **636260** | 1 | Switch | interrupteur | Schalter | interruptor | interruptor |
| 8 | **1902364** | 1 | Bracket | support | Winkel | grampo | grampa |
| 9 | **17C000616** | 1 | Bolt | boulon | Bolzen | parafuso | bulón |
| 10 | **59D000003** | 1 | Nut | écrou | Mutter | porca | tuerca |
| 11 | **1534135** | 1 | Switch | interrupteur | Schalter | interruptor | interruptor |
| 12 | **12E000010** | 1 | Lockwasher | rondelle frein | Sicherungsscheibe | arruela de pressão | arandela seguridad |
| 13 | **14D000010** | 2 | Nut | écrou | Mutter | porca | tuerca |
| 14 | [1]--------- | 1 | Regulator | régulateur | Regler | regulador | regulador |
| 15 | **3G0001010** | 3 | Screw | vis | Schraube | parafuso | tornillo |
| 16 | **12E000010** | 3 | Lockwasher | rondelle frein | Sicherungsscheibe | arruela de pressão | arandela seguridad |
| 17 | **12D000010** | 3 | Nut | écrou | Mutter | porca | tuerca |
| 18 | **1901448** | 1 | Jumper wire | fil volant | Schaltdraht | cabo jumper | alambre del conec |
| 19 | **1900464** | 1 | Jumper wire | fil volant | Schaltdraht | cabo jumper | alambre del conec |
| 20 | **1900460** | 1 | Jumper wire | fil volant | Schaltdraht | cabo jumper | alambre del conec |
| 21 | **652764** | 1 | Jumper wire | fil volant | Schaltdraht | cabo jumper | alambre del conec |
| 22 | **1901447** | 1 | Jumper wire | fil volant | Schaltdraht | cabo jumper | alambre del conec |
| 23 | **695343** | 1 | Jumper wire | fil volant | Schaltdraht | cabo jumper | alambre del conec |
| 24 | **1908678** | 1 | Cable | câble | Kabel | cabo | cable |
| 25 | **1906801** | 1 | Cable | câble | Kabel | cabo | cable |
| 26 | **1908677** | 1 | Cable | câble | Kabel | cabo | cable |
| 27 | **1908871** | 1 | Cable | câble | Kabel | cabo | cable |
| 28 | **754019** | 1 | Switch | interrupteur | Schalter | interruptor | interruptor |
| 29 | †**1901749** | 1 | Face plate | plaque desurface | frontplatte | chapa da sup | placa de frente |
| 30 | **1901993** | 1 | Bracket | support | Winkel | grampo | grampa |
| 31 | **18C000616** | 2 | Bolt | boulon | Bolzen | parafuso | bulón |
| 32 | **60D000006** | 2 | Nut | écrou | Mutter | porca | tuerca |
| 33 | **1902859** | 1 | Wire harness | harnais fils | Kabelbaum | chicote fiação | mazo de cables |
| 34 | **1902860** | 1 | Wire harness | harnais fils | Kabelbaum | chicote fiação | mazo de cables |
| 35 | **1902275** | 1 | Circuit breaker | disjoncteur | Sicherungsautomat | disjuntor | cortacircuitos |
| 36 | **85G000816** | 2 | Screw | vis | Schraube | parafuso | tornillo |
| 37 | **1903088** | 2 | Cable | câble | Kabel | cabo | cable |
| 38 | **1902616** | 1 | Wire assy | fil ens | Draht Ens | fio conj | cable conj |
| 39 | **1902615** | 2 | Jumper wire | fil volant | Schaltdraht | cabo jumper | alambre del conec |
| 40 | **1906804** | 1 | Cable | câble | Kabel | cabo | cable |
| 41 | **551323** | 2 | Sending unit | capteur unité | Sendereinheit | sonda unidade | sonda unidade |
| 42 | **14D000010** | 4 | Nut | écrou | Mutter | porca | tuerca |
| 43 | **12E000010** | 2 | Lockwasher | rondelle frein | Sicherungsscheibe | arruela de pressão | arandela seguridad |
| 44 | **1900582** | 1 | Jumper wire | fil volant | Schaltdraht | cabo jumper | alambre del conec |

[1] Ref A1 30050

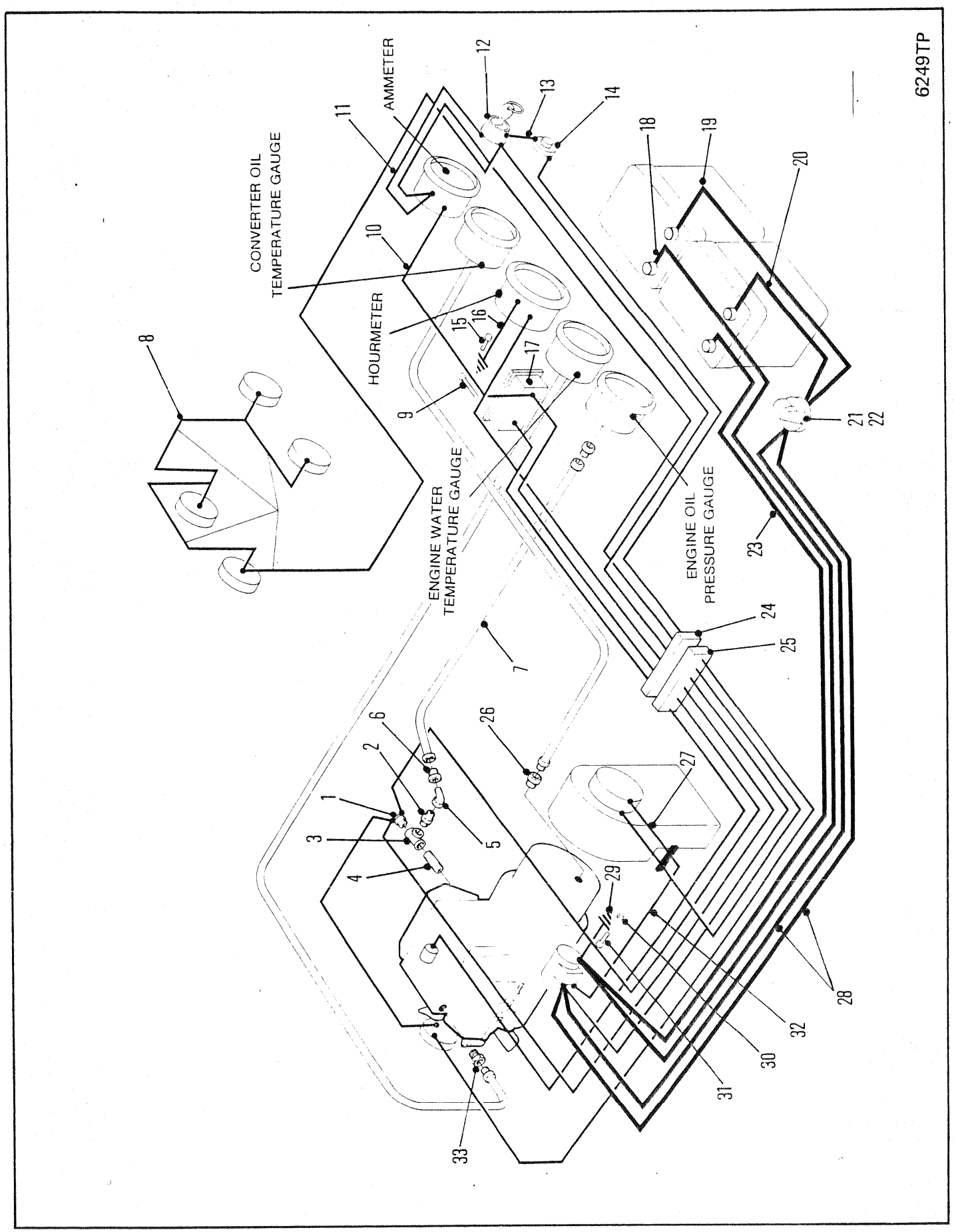
6249TP
AMMETER
CONVERTER OIL TEMPERATURE GAUGE
HOURMETER
ENGINE WATER TEMPERATURE GAUGE
ENGINE OIL PRESSURE GAUGE
1
2
3
4
5
6
7
8
9
10
11
12
13
14
15
16
17
18
19
20
21
22
23
24
25
26
27
28
29
30
31
32
33

# ELECTRICAL SYSTEM
# SYSTÈME ELECTRIQUE
# ELEKTRISCHE ANLAGE
# SISTÈMA ELECTRICO
# SISTEMA ELECTRICO

| No. | Part No. | Qty | Description | Description | Benennung | Descrição | Descripción |
|---|---|---|---|---|---|---|---|
| 1 | **636260** | 1 | Switch | interrupteur | Schalter | interruptor | interruptor |
| 2 | **38F000003** | 1 | Adaptor | adaptateur | Zwischenstück | adaptador | adaptador |
| 3 | **18F000001** | 1 | Tee | raccord T | T-Verbindungsstück | te | te |
| 4 | **5K0000108** | 1 | Nipple | raccord | Nippel | niple | niple |
| 5 | **25F000001** | 1 | Elbow | coude | Winkelrohr | cotovêlo | codo |
| 6 | **39F000003** | 1 | Adaptor | adaptateur | Zwischenstück | adaptador | adaptador |
| 7 | **1907167** | 1 | Hose | tuyau flexible | Schlauch | mangueira | manguera |
| 8 | ○--------- | - | Light | lampe | Licht | lâmpada | lámpara |
| 9 | **85G000816** | 2 | Screw | vis | Schraube | parafuso | tornillo |
| 10 | **1906032** | 1 | Wire | fil | Draht | fio | cable |
| 11 | **1905778** | 1 | Wire | fil | Draht | fio | cable |
| 12 | **573548** | 1 | Ignition switch | interr dallumage | Zundschalter | chava de ignição | inter encendido |
| 13 | **658487** | 1 | Wire | fil | Draht | fio | cable |
| 14 | **600259** | 1 | Starter button | bouton démarrage | Anlknopf | batão arranque | botón arranque |
| 15 | **85G000605** | 5 | Screw | vis | Schraube | parafuso | tornillo |
| 16 | **1900460** | 1 | Ground wire | fil de terre | Massedraht | fio de terra | cable de tierra |
| 17 | **1902275** | 1 | Circuit breaker | disjoncteur | Sicherungsautomat | disjuntor | cortacircuitos |
| 18 | **1909980** | 1 | Cable | câble | Kabel | cabo | cable |
| 19 | **1909978** | 1 | Cable | câble | Kabel | cabo | cable |
| 20 | **1908871** | 1 | Cable | câble | Kabel | cabo | cable |
| 21 | **754019** | 1 | Switch | interrupteur | Schalter | interruptor | interruptor |
| 22 | †**1901749** | 1 | Plate | plaque | Platte | placa | placa |
| 23 | **1909979** | 1 | Cable | câble | Kabel | cabo | cable |
| 24 | **1911508** | 1 | Wiring harness | harnais installation | Kabelbaum | chicote instalação | mazo cables |
| 25 | [1]**1909985** | 1 | Wiring harness | harnais installation | Kabelbaum | chicote instalação | mazo cables |
| 26 | **19F000009** | 1 | Bushing | chemise | Buchse | bucha | buje |
| 27 | **1909992** | 1 | Wire assy | fil ens | Draht Ens | fio conj | cable conj |
| 28 | **1903088** | 2 | Cable | câble | Kabel | cabo | cable |
| 29 | **1906804** | 1 | Cable | câble | Kabel | cabo | cable |
| 30 | **24E000006** | 1 | Lockwasher | rondelle frein | Sicherungsscheibe | arruela de pressão | arandela seguridad |
| 31 | **18C000612** | 1 | Bolt | boulon | Bolzen | parafuso | bulón |
| 32 | [2]--------- | - | Wire | fil | Draht | fio | cable |
| 33 | **19F000009** | 1 | Bushing | chemise | Buchse | bucha | buje |

[1] Inc 32

[2] Ref 25


1
RANGER
2
CLARK
3
PART 1513857
WARNING
DISCONNECT STEERING FRAME LOCK BEFORE MOVING MACHINE
4
5
666
6
B
C
7
8
WARNING
CONNECT POSITIVE TO POSITIVE – NEGATIVE TO NEGATIVE. USE SYSTEM VOLTAGE WHEN JUMP STARTING. CONNECT POSITIVE FIRST THEN NEGATIVE TO FRAME AWAY FROM THE BATTERY COMPARTMENT. FAILURE TO FOLLOW THIS PROCEDURE COULD RESULT IN BATTERY EXPLOSION.
CAUTION
KEEP VEHICLE CLEAN
TO REDUCE FIRE HAZARD REMOVE DEBRIS FROM ALL COMPARTMENTS AFTER EACH 8 HOURS OF OPERATION, OR MORE OFTEN IF WARRANTED BY WORKING CONDITIONS
IN CASE OF FIRE
STOP VEHICLE
LOWER ALL HYDRAULIC ACCESSORIES
STOP ENGINE
TURN BATTERY DISCONNECT SWITCH OFF
APPLY PARKING BRAKE
EXTINGUISH FIRE
1922792
12
9
CAUTION
THIS MACHINE EQUIPPED WITH AUXILIARY STEERING. IF ENGINE OR MAIN STEER PUMP FAILS.
—TURN AUXILIARY STEERING SWITCH ON
—BRING MACHINE TO IMMEDIATE STOP
TEST PROCEDURE
10
D
LIGHTS
1924106
11
13
THROTTLE
1924108
14
WARNING
—NO ROOM FOR MAN IN THIS AREA WHEN VEHICLE IS TURNING OR MOVING
—MAN IN THIS AREA NOT VISIBLE TO OPERATOR
—DO NOT STAND OR WORK IN THIS AREA WHEN ENGINE IS RUNNING.
—USE SAFETY LINK WHEN SERVICING, LIFTING OR TRANSPORTING
1922797
15
IMPORTANT
16
CAUTION
TRAINED PERSONNEL ONLY MAY OPERATE THIS VEHICLE. REFER TO OPERATORS MANUAL FOR DETAILED OPERATING AND MAINTENANCE INSTRUCTIONS.
BEFORE OPERATING VEHICLE
CHECK
–SAFETY LINK REMOVED AND PROPERLY RETAINED
–ALL GUARDS AND COMPARTMENT COVERS IN PLACE
–FIRE EXTINGUISHER CHARGED
–SEAT BELT ON
–PARKING BRAKE OFF
–BRAKE AND STEERING CONTROLS OPERABLE
BEFORE LEAVING VEHICLE
–LOWER ALL HYDRAULIC ACCESSORIES
–ENGAGE PARKING BRAKE
–ENGAGE NEUTRAL LOCK
–TURN ENGINE OFF
–TURN BATTERY MASTER SWITCH OFF
–CLEAN DEBRIS FROM ALL GUARDS AND COMPARTMENTS
1922795
17
ARCH
UP
DOWN
GRAPPLE
CLOSED
OPEN

6377TP (1 of 2)

# DECALS
# DÉCALQUES
# ABZIEHBILD
# DECALCOMANIAS
# CALCOMANÍAS

| No. | Part No. | Qty | Description | Description | Benennung | Descrição | Descripción |
|---|---|---|---|---|---|---|---|
| 1 | 1921450 | 2 | Decal Ranger | décal Ranger | Abzbld Ranger | decal Ranger | calc Ranger |
| 2 | 1937784 | 3 | Decal | décalcamanie | Abziehbild | decalcomania | calcomania |
| 3 | 1513887 | 1 | Tag Warning | étiquette davertis | Etikett Warnung | rótulo de aviso | etiqueta de adver |
| 4 | [1]1934687 | 2 | Decal 666C/black | décal 666C/noir | Abziehbld 666C/Schwarz | decal 666C/preto | calc 666C/negro |
| 5 | 1921454 | 1 | Decal green | décal vert | Abziehbild Grün | decal verde | calc verde |
| 6 | [1]1921457 | 2 | Decal B | décal B | Abzbld B | decal B | calc B |
| 7 | [1]1921458 | 2 | Decal C | décal C | Abzbld C | decal C | calc C |
| 8 | 2534214 | 1 | Decal | décalcamanie | Abziehbild | decalcomania | calcomania |
| 9 | 2536249 | 4 | Decal Lift | décal lever | Abziehbild Heben | decal levantar | calcom levantar |
| 10 | ☒1938453 | 1 | Decal | décalcamanie | Abziehbild | decalcomania | calcomania |
| 11 | ☒1924106 | 1 | Decal | décalcamanie | Abziehbild | decalcomania | calcomania |
| 12 | 1932689 | 1 | Decal | décalcamanie | Abziehbild | decalcomania | calcomania |
| 13 | ☒1924108 | 1 | Decal | décalcamanie | Abziehbild | decalcomania | calcomania |
| 14 | 1931327 | 2 | Decal | décalcamanie | Abziehbild | decalcomania | calcomania |
| 15 | 1932775 | 1 | Label | etiquette | Beschriftung | etiqueta | etiqueta |
| 16 | 1922792 | 1 | Decal Caution | décalco attention | Abziehbild Vorsicht | decalco atenção | calcomania atención |
| 17 | [2]1929329 | 1 | Decal | décalcamanie | Abziehbild | decalcomania | calcomania |
| 18 | 1922855 | 1 | Decal | décalcamanie | Abziehbild | decalcomania | calcomania |
| 19 | [3]1924109 | 1 | Decal | décalcamanie | Abziehbild | decalcomania | calcomania |
| 20 | [3]1924110 | 1 | Decal Emgy Stop | décal arrêt urgence | Abzbid Notausschait | decal parada emerge | calco parada emerge |
| 21 | 1922864 | 1 | Decal | décalcamanie | Abziehbild | decalcomania | calcomania |
| 22 | ☒1922838 | 1 | Decal Emgy Brk | décal frn de secours | Abzbid Notbremse | decal freio emerg | calcom freno emerg |
| 23 | 1924117 | 1 | Decal | décalcamanie | Abziehbild | decalcomania | calcomania |
| 24 | 1922839 | 1 | Decal | décalcamanie | Abziehbild | decalcomania | calcomania |
| 25 | [2]1930006 | 1 | Decal | décalcamanie | Abziehbild | decalcomania | calcomania |
| 26 | [3,5]1929732 | 1 | Decal Lube Inst | notice instr graissage | Abzbld Schmieranw | inst lube decal | calco inst del aceite |
| 27 | [4,5]1929327 | 1 | Decal Lube Inst | notice instr graissage | Abzbld Schmieranw | inst lube decal | calco inst del aceite |
| 28 | [2]1923939 | 1 | Decal | décalcamanie | Abziehbild | decalcomania | calcomania |
| 29 | 1922885 | 1 | Decal | décalcamanie | Abziehbild | decalcomania | calcomania |
| 30 | 1922886 | 1 | Decal | décalcamanie | Abziehbild | decalcomania | calcomania |
| 31 | 1913742 | 2 | Decal | décalcamanie | Abziehbild | decalcomania | calcomania |
| 32 | 1922862 | 1 | Decal | décalcamanie | Abziehbild | decalcomania | calcomania |
| 33 | 1922884 | 1 | Decal | décalcamanie | Abziehbild | decalcomania | calcomania |
| 34 | 2534215 | 1 | Decal Patent | décal brevet | Abz Patentnummera | decal de patente | cal de patente |
| 35 | 1927527 | 1 | Decal | décalcamanie | Abziehbild | decalcomania | calcomania |
| 36 | 2533051 | 1 | Decal | décalcamanie | Abziehbild | decalcomania | calcomania |
| 37 | ☒1922863 | 1 | Decal | décalcamanie | Abziehbild | decalcomania | calcomania |

[1] Quantity of 4 Decals required for grapple machines.
[1] 4 décalcomanies sont requises pur les machines à grappins
[1] Vier Klebeschilder werden benötigt für die Greifer
[1] Quantidade de 4 decalcomanias requeridas para máquinas de garra
[1] Cantidad de 4 calcomanias requeridad para máquinas de agarre.

[2] □666 GR

[3] □GM

[4] □CUM

[5] Used on machines with midmount brake.
[5] S'utilise sur les machines avec un frein à montage central.
[5] Für Maschinen mit Mittelstützenbremse.
[5] Se usa en las máquinas con freno de montage intermedio.
[5] Usado em máquina de freio com montante do meio.

| | |
|---|---|
| 666CUM | 500D-101-CAC→500G-9999-CAC |
| 666GM | 513E-101-CAC→513G-9999-CAC |
| 666GMGR | 515A-101-CAC→515A-9999-CAC |

18 — BLADE LOWER RAISE / STEER LEFT RIGHT 1922855

19 — SHUT OFF 1924109

20 — EMERGENCY STOP 1924110

21 — WARNING
DO NOT TURN BATTERY DISCONNECT SWITCH TO "OFF" POSITION WHILE ENGINE IS RUNNING

22 — EMERGENCY BRAKE 1922838

23 — COOLANT LEVEL 1924117

24 — PARKING BRAKE 1922839

25 — BOOM UP DOWN / ROTATE LEFT RIGHT 1929328

Chassis **CLARK** Lubrication Instructions **RANGER** Drive Line

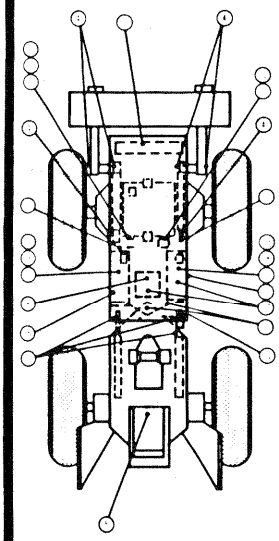

| ITEM | 10 HOUR OR DAILY SERVICE | 664 | 666 | 667 | 668 | CHECK | LUBE | CHANGE | KEY |
|---|---|---|---|---|---|---|---|---|---|
| 1 | CRADLE & HINGE PINS | x | x | x | x | | • | | EPMD |
| 2 | STEER CYLINDER PINS | x | x | x | x | | • | | EPMD |
| 3 | MID MOUNT | x | x | x | | | • | | EPMD |
| 4 | UTILITY BLADE & CYLINDER PINS | x | x | x | | | • | | EPMD |
| 5 | FUEL TANK | x | x | x | x | • | | | DF |
| 6 | OIL RESERVOIR | x | x | x | x | • | | | DX |
| 7 | COOLANT LEVEL | x | x | x | x | • | | | |
| | 50 HOUR OR WEEKLY SERVICE | | | | | | | | |
| 8 | TORQUE CONVERTER & TRANSMISSION | x | x | x | x | • | | | DX |
| 9 | MID MOUNT BEARING | | | | x | • | | | DX |
| 10 | MASTER CYLINDER SERVICE | | | x | x | • | | | DX |
| 11 | MASTER CYLINDER EMERGENCY | x | x | x | x | • | | | DX |
| 12 | MASTER CYLINDER RESET | x | x | | | • | | | BF |
| 13 | DIFFERENTIAL | x | x | x | x | • | | | EPGL |
| 14 | PLANETARY | x | x | x | x | • | | | EPGL |
| 15 | WINCH LEVER | x | x | x | x | | • | | EPMD |
| | 100 HOUR OR 2 WEEKS SERVICE | | | | | | | | |
| 16 | SLIP RING | x | x | x | x | | • | | EPMD |
| | 250 HOUR OR MONTHLY SERVICE | | | | | | | | |
| 17 | TORQUE CONVERTER & TRANSMISSION FILTER | x | x | x | x | | | • | |
| | 500 HOUR OR 2 MONTH SERVICE | | | | | | | | |
| 18 | HYDRAULIC TANK FILTER | x | x | x | x | | | • | |
| 19 | TORQUE CONVERTER & TRANSMISSION | x | x | x | x | | | • | DX |
| 20 | CLEAN RADIATOR CORE | x | x | x | x | • | | | |
| | 1,000 HOUR OR 6 MONTH SERVICE | | | | | | | | |
| 21 | UNIVERSAL JOINTS | x | x | x | x | | • | | EPMD |
| 22 | MID MOUNT BEARING | x | x | x | | | | • | EPMD |
| 23 | OIL RESERVOIR | x | x | x | x | | | • | DX |

**Lubricant Key**

| EPMD | Extreme Pressure Molybdenum Disulphide Grease | | | | DF | Diesel Fuel | |
|---|---|---|---|---|---|---|---|
| | Ambient Temp. Range | Lubricant To Be Used: SAE Grade | API Class | Military Spec | | Ambient Temp. Range | Extreme Pressure Gear Lube (1) SCL Type) |
| DX | Above 23°C (+10°F) | 10W | GL | MIL-L-2105B | EPGL | Below 23°C (+10°F) | SAE Grade 75 |
| | | 10W | GD | MIL-L-2104C | | -18°C to 23°C (0°F to +10°F) | SAE Grade 80 |
| | Above 4°C (+30°F) | Dexron or Dexron II Automatic Transmission Fluid | | | | -18°C to 38°C (0°F to +100°F) | SAE Grade 90 |
| | Above 54°C (+65°F) | CONOCO DN 600 Fluid | | | | Above 38°C (+100°F) | SAE Grade 140 |
| | | | | | BF | Heavy Duty Brake Fluid SAE J1703 | |

(1) SCL signifies SUNOCHLORO Red Type factory fill is made with EP/SCL SL Type Use it is recommended that the same type be used when adding or refilling

1921614

26, 27

28

**Grapple Lubrication**

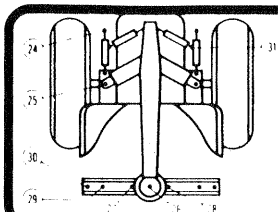

| ITEM | 10 HOUR OR DAILY SERVICE | 664 | 666 | 667 | KEY |
|---|---|---|---|---|---|
| 24 | ARCH CYLINDER PIN 4 | x | x | x | EPMD |
| 25 | ARCH HINGE PIN 2 (4) | x | x | x | EPMD |
| 26 | ROTATING HEAD BEARING 1 | x | x | x | EPMD |
| 27 | SUSPENSION PIN YOKE 2 | x | x | x | EPMD |
| 28 | SUSPENSION PIN GRAPPLE 2 | x | x | x | EPMD |
| 29 | GRAPPLE CYLINDER PIN 2 | x | x | x | EPMD |
| 30 | GRAPPLE HINGE PIN 4 | x | x | x | EPMD |
| 31 | BOOM CYLINDER PIN 4 | | | x | EPMD |

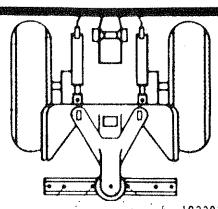

1923939

30

#2 DIESEL 1922886

29

TRANS. OIL FILTER 1922885

HYDRAULIC RESERVOIR 1922884

32

NEGATIVE GROUND 1922862

33

34

COVERED BY ONE OR MORE OF THE FOLLOWING PATENTS
UNITED STATES

| | | | |
|---|---|---|---|
| 2945544 | 2954040 | 3126752 | 3142195 |
| 3344679 | D209135 | 3363714 | 3367356 |
| 3465609 | 3473566 | D217503 | 3724585 |
| 3741343 | 3848620 | 3866705 | 3867750 |
| 3859216 | 3893345 | 3896705 | 3924667 |
| 3946882 | 3949826 | 3960371 | 3990688 |
| 4024922 | 4030776 | | |

CANADA
PATENTED 1960 1966 Rd 1966 1968 1971 1973 1974

31




WINCH FREE SPOOL LOCK WINCH IN 1927527

35

36

CLARK

37

ONLY APPROVED TRANSMISSION FLUID IS TO BE USED TO FILL THE MASTER CYLINDER.
REFER TO MACHINE OPERATOR'S MANUAL 1922863

6377TP (2 of 2)

# DECALS
# DÉCALQUES
# ABZIEHBILD
# DECALCOMANIAS
# CALCOMANÍAS

| No. | Part No. | Qty | Description | Description | Benennung | Descrição | Descripción |
|---|---|---|---|---|---|---|---|
| 1 | **1921450** | 2 | Decal Ranger | décal Ranger | Abzbld Ranger | decal Ranger | calc Ranger |
| 2 | **1937784** | 3 | Decal | décalcamanie | Abziehbild | decalcomania | calcomania |
| 3 | **1513887** | 1 | Tag Warning | étiquette davertis | Etikett Warnung | rótulo de aviso | etiqueta de adver |
| 4 | [1]**1934687** | 2 | Decal 666C/black | décal 666C/noir | Abziehbld 666C/Schwarz | decal 666C/preto | calc 666C/negro |
| 5 | **1921454** | 1 | Decal green | décal vert | Abziehbild Grün | decal verde | calc verde |
| 6 | [1]**1921457** | 2 | Decal B | décal B | Abzbld B | decal B | calc B |
| 7 | [1]**1921458** | 2 | Decal C | décal C | Abzbld C | decal C | calc C |
| 8 | **2534214** | 1 | Decal | décalcamanie | Abziehbild | decalcomania | calcomania |
| 9 | **2536249** | 4 | Decal Lift | décal lever | Abziehbild Heben | decal levantar | calcom levantar |
| 10 | ☒**1938453** | 1 | Decal | décalcamanie | Abziehbild | decalcomania | calcomania |
| 11 | ☒**1924106** | 1 | Decal | décalcamanie | Abziehbild | decalcomania | calcomania |
| 12 | **1932689** | 1 | Decal | décalcamanie | Abziehbild | decalcomania | calcomania |
| 13 | ☒**1924108** | 1 | Decal | décalcamanie | Abziehbild | decalcomania | calcomania |
| 14 | **1931327** | 2 | Decal | décalcamanie | Abziehbild | decalcomania | calcomania |
| 15 | **1932775** | 1 | Label | etiquette | Beschriftung | etiqueta | etiqueta |
| 16 | **1922792** | 1 | Decal Caution | décalco attention | Abziehbild Vorsicht | decalco atenção | calcomania atención |
| 17 | [2]**1929329** | 1 | Decal | décalcamanie | Abziehbild | decalcomania | calcomania |
| 18 | **1922855** | 1 | Decal | décalcamanie | Abziehbild | decalcomania | calcomania |
| 19 | [3]**1924109** | 1 | Decal | décalcamanie | Abziehbild | decalcomania | calcomania |
| 20 | [3]**1924110** | 1 | Decal Emgy Stop | décal arrêt urgence | Abzbid Notausschait | decal parada emerge | calco parada emerge |
| 21 | **1922864** | 1 | Decal | décalcamanie | Abziehbild | decalcomania | calcomania |
| 22 | ☒**1922838** | 1 | Decal Emgy Brk | décal frn de secours | Abzbid Notbremse | decal freio emerg | calcom freno emerg |
| 23 | **1924117** | 1 | Decal | décalcamanie | Abziehbild | decalcomania | calcomania |
| 24 | **1922839** | 1 | Decal | décalcamanie | Abziehbild | decalcomania | calcomania |
| 25 | [2]**1930006** | 1 | Decal | décalcamanie | Abziehbild | decalcomania | calcomania |
| 26 | [3,5]**1929732** | 1 | Decal Lube Inst | notice instr graissage | Abzbld Schmieranw | inst lube decal | calco inst del aceite |
| 27 | [4,5]**1929327** | 1 | Decal Lube Inst | notice instr graissage | Abzbld Schmieranw | inst lube decal | calco inst del aceite |
| 28 | [2]**1923939** | 1 | Decal | décalcamanie | Abziehbild | decalcomania | calcomania |
| 29 | **1922885** | 1 | Decal | décalcamanie | Abziehbild | decalcomania | calcomania |
| 30 | **1922886** | 1 | Decal | décalcamanie | Abziehbild | decalcomania | calcomania |
| 31 | **1913742** | 2 | Decal | décalcamanie | Abziehbild | decalcomania | calcomania |
| 32 | **1922862** | 1 | Decal | décalcamanie | Abziehbild | decalcomania | calcomania |
| 33 | **1922884** | 1 | Decal | décalcamanie | Abziehbild | decalcomania | calcomania |
| 34 | **2534215** | 1 | Decal Patent | décal brevet | Abz Patentnummera | decal de patente | cal de patente |
| 35 | **1927527** | 1 | Decal | décalcamanie | Abziehbild | decalcomania | calcomania |
| 36 | **2533051** | 1 | Decal | décalcamanie | Abziehbild | decalcomania | calcomania |
| 37 | ☒**1922863** | 1 | Decal | décalcamanie | Abziehbild | decalcomania | calcomania |

[1] Quantity of 4 Decals required for grapple machines.
[1] 4 décalcomanies sont requises pur les machines à grappins
[1] Vier Klebeschilder werden benötigt für die Greifer
[1] Quantidade de 4 decalcomanias requeridas para máquinas de garra
[1] Cantidad de 4 calcomanias requeridad para máquinas de agarre.

[2] □666 GR

[3] □GM

[4] □CUM

[5] Used on machines with midmount brake.
[5] S'utilise sur les machines avec un frein à montage central.
[5] Für Maschinen mit Mittelstützenbremse.
[5] Se usa en las máquinas con freno de montage intermedio.
[5] Usado em máquina de freio com montante do meio.

666CUM 500D-101-CAC→500G-9999-CAC
666GM 513E-101-CAC→513G-9999-CAC
666GMGR 515A-101-CAC→515A-9999-CAC

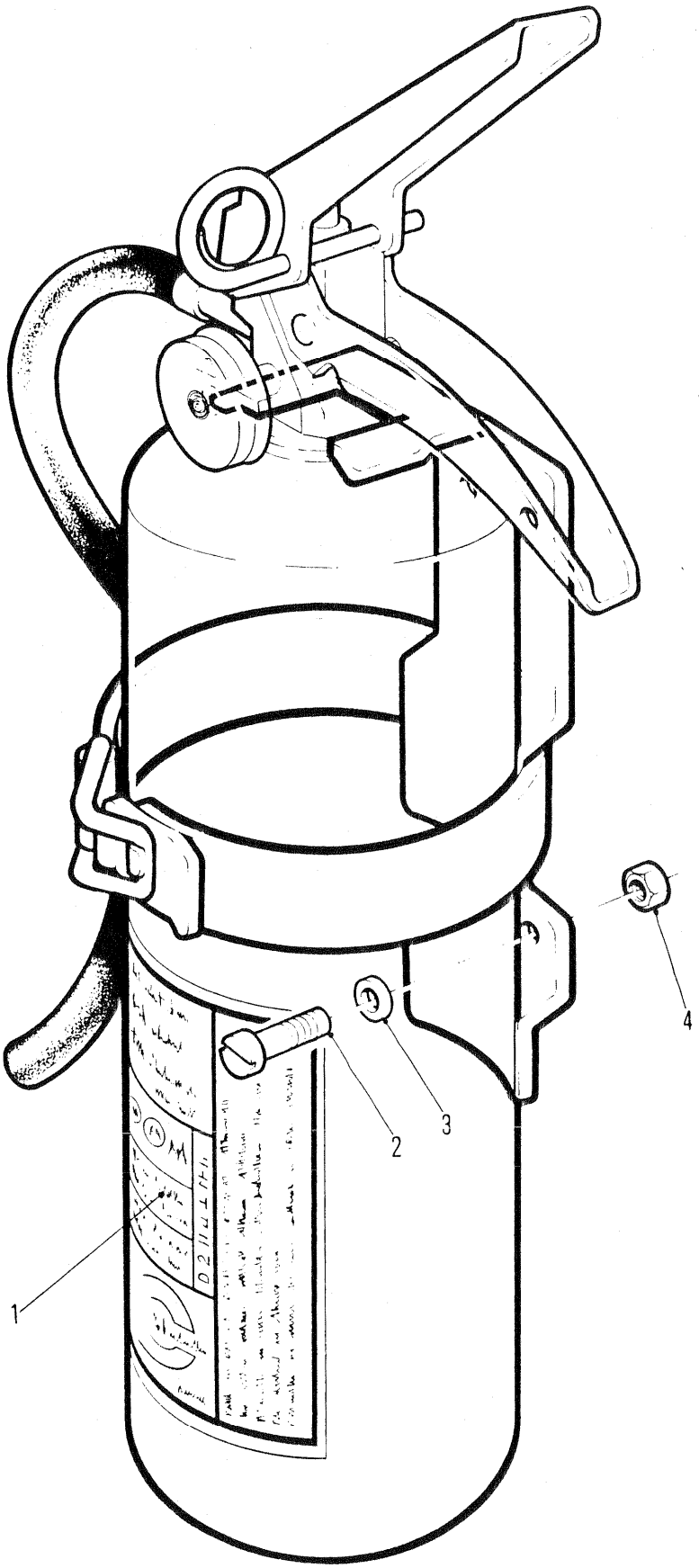
1
2
3
4
6607TP

# FIRE EXTINGUISHER
# EXTINCTEUR À INCENDIE
# FEUERLÖSCHER
# EXTINTOR DE INCÊNDIO
# EXTINTOR DE FUEGO

| No. | Part No. | Qty | Description | Description | Benennung | Descrição | Descripción |
|---|---|---|---|---|---|---|---|
| 1 | **1908806** | 1 | Fire extinguisher | extinct à incendie | Feuerlöscher | extintor incêndio | extintor de fuego |
| 2 | **85G001010** | - | Bolt | boulon | Bolzen | parafuso | bulón |
| 3 | **---------** | - | Washer | rondelle | Scheibe | arruela | arandela |
| 4 | **50D000010** | - | Nut | écrou | Mutter | porca | tuerca |

666CUM 500D-101-CAC➡500D-9999-CAC
666GM 513E-101-CAC➡513F-9999-CAC
666GMGR 515A-101-CAC➡515A-9999-CAC

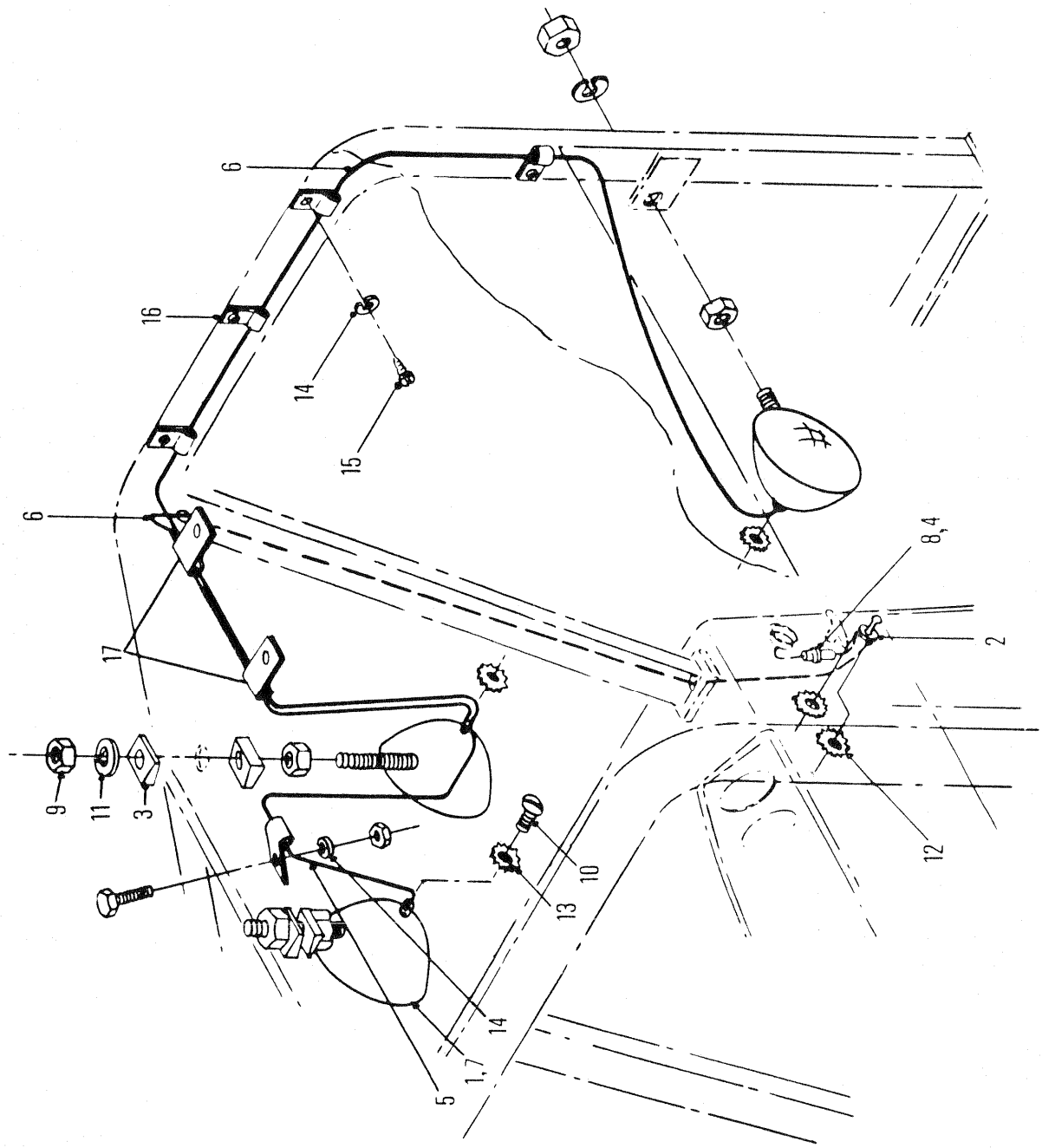
5849TP
6
16
14
15
6
17
8,4
2
9
11
3
12
10
13
14
1,7
5

# LIGHTS⊠
# PHARES⊠
# SCHEINWERFER-LEUCHTEN⊠
# LUZES⊠
# LUCES⊠

| No. | Part No. | Qty | Description | Description | Benennung | Descrição | Descripción |
|---|---|---|---|---|---|---|---|
| 1 | [2]547529 | 3 | Light assembly | assemblage élect | Lichteinheit | conj luzes | conj de luces |
| 2 | 1501478 | 1 | Switch | interrupteur | Schalter | interruptor | interruptor |
| 3 | 553896 | 4 | Washer | rondelle | Scheibe | arruela | arandela |
| 4 | 611074 | 1 | Fuse | fusible | Sicherung | fusível | fusible |
| 5 | 695317 | 1 | Wire assy | fil ens | Draht Ens | fio conj | cable conj |
| 6 | 799565 | 2 | Wire assy | fil ens | Draht Ens | fio conj | cable conj |
| 7 | 944907 | 3 | Sealed beam | barra jointe | Trägerdichtung | farol de milha | viga sellada |
| 8 | [1]1902169 | 1 | Wire assy | fil ens | Draht Ens | fio conj | cable conj |
| 9 | 1D0000008 | 6 | Nut | écrou | Mutter | porca | tuerca |
| 10 | 3G0000806 | 1 | Screw | vis | Schraube | parafuso | tornillo |
| 11 | 4E0000008 | 3 | Lockwasher | rondelle frein | Sicherungsscheibe | arruela de pressão | arandela seguridad |
| 12 | 12E000006 | 2 | Lockwasher | rondelle frein | Sicherungsscheibe | arruela de pressão | arandela seguridad |
| 13 | 12E000008 | 3 | Lockwasher | rondelle frein | Sicherungsscheibe | arruela de pressão | arandela seguridad |
| 14 | 17E000010 | 5 | Lockwasher | rondelle frein | Sicherungsscheibe | arruela de pressão | arandela seguridad |
| 15 | 18G001008 | 4 | Screw | vis | Schraube | parafuso | tornillo |
| 16 | 30H000013 | 4 | Clip | attache | Schelle | braçadeira | abrazadera |
| 17 | 31H000009 | 2 | Clip | attache | Schelle | braçadeira | abrazadera |

[1] Inc 4

[2] When ordering include 10 for front R.H. installation
[2] Lors de lacommande inclure 10 pour l'installation de lavant droit
[2] Bei Bestellung, 10 für den Einbau der vorderen, rechten Seite, hinzufügen
[2] Ao encomendar incluir 10 para a instalação dianteira direita
[2] Al ordenar, incluir 10 para la instalación delantera derecha

666CUM 500D-101-CAC→500D-9999-CAC
666GMGR 515A-101-CAC→515A-9999-CAC

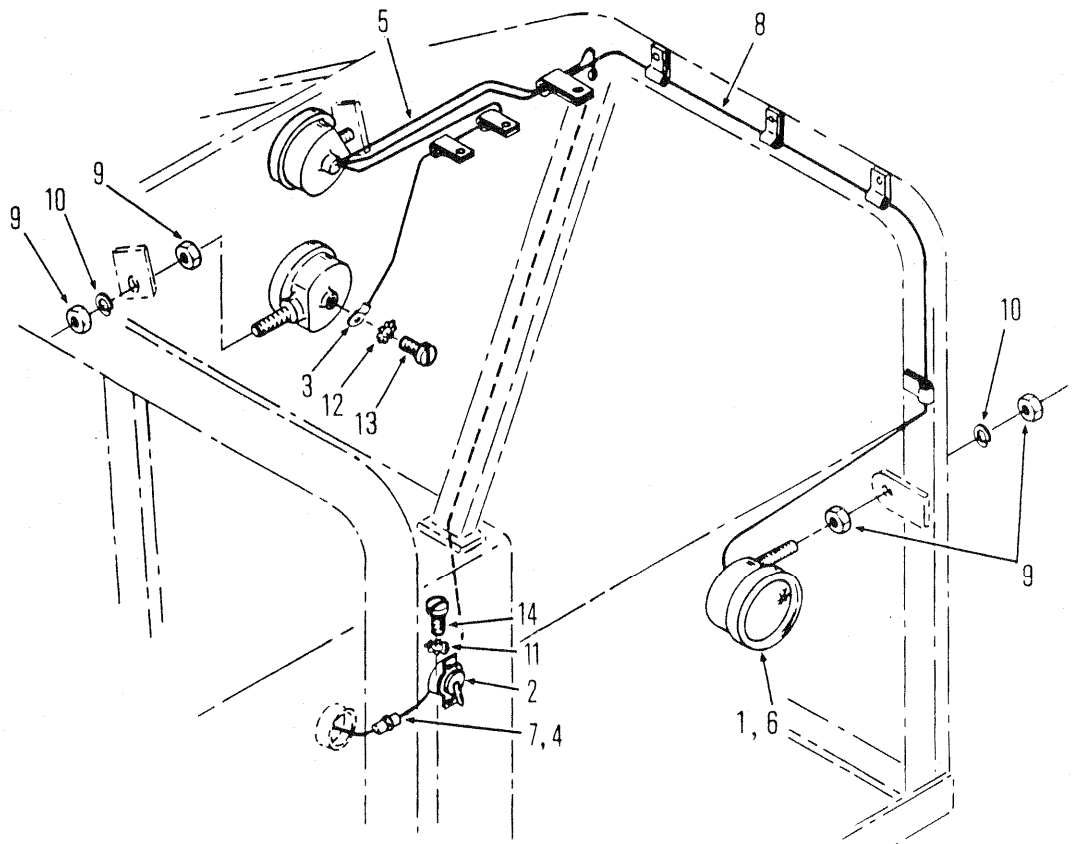


5850TP

**LIGHTS⊠**
**PHARES⊠**
**SCHEINWERFER-LEUCHTEN⊠**
**LUZES⊠**
**LUCES⊠**

| No. | Part No. | Qty | Description | Description | Benennung | Descrição | Descripción |
|---|---|---|---|---|---|---|---|
| 1 | [1]547529 | 3 | Light assy | assemblage élect | Lichteinheit | conj luzes | conj de luces |
| 2 | [2]1501478 | 1 | Switch | interrupteur | Schalter | interruptor | interruptor |
| 3 | 583454 | 1 | Wire | fil | Draht | fio | cable |
| 4 | 611074 | 1 | Fuse | fusible | Sicherung | fusível | fusible |
| 5 | 799565 | 1 | Wire | fil | Draht | fio | cable |
| 6 | 944907 | 3 | Sealed unit | bloc optique herm | Abgedichtete Schnwrf | farol vedado | óptica sellada |
| 7 | 1911571 | 1 | Wire | fil | Draht | fio | cable |
| 8 | 1913767 | 1 | Wire assy | fil ens | Draht Ens | fio conj | cable conj |
| 9 | 1D0000008 | 6 | Nut | écrou | Mutter | porca | tuerca |
| 10 | 4E0000008 | 3 | Lockwasher | rondelle frein | Sicherungsscheibe | arruela de pressão | arandela seguridad |
| 11 | 12E000006 | 2 | Lockwasher | rondelle frein | Sicherungsscheibe | arruela de pressão | arandela seguridad |
| 12 | 12E000008 | 3 | Lockwasher | rondelle frein | Sicherungsscheibe | arruela de pressão | arandela seguridad |
| 13 | 85G000808 | 3 | Screw | vis | Schraube | parafuso | tornillo |
| 14 | [3]§--------- | 2 | Screw | vis | Schraube | parafuso | tornillo |

[1] Inc 13

[2] Inc 14

[3] See 2
[3] Voir 2
[3] Siehe 2
[3] Veja 2
[3] Véase 2

666CUM 500E-101-CAC➡500E-9999-CAC
666GM 513E-101-CAC➡513E-9999-CAC

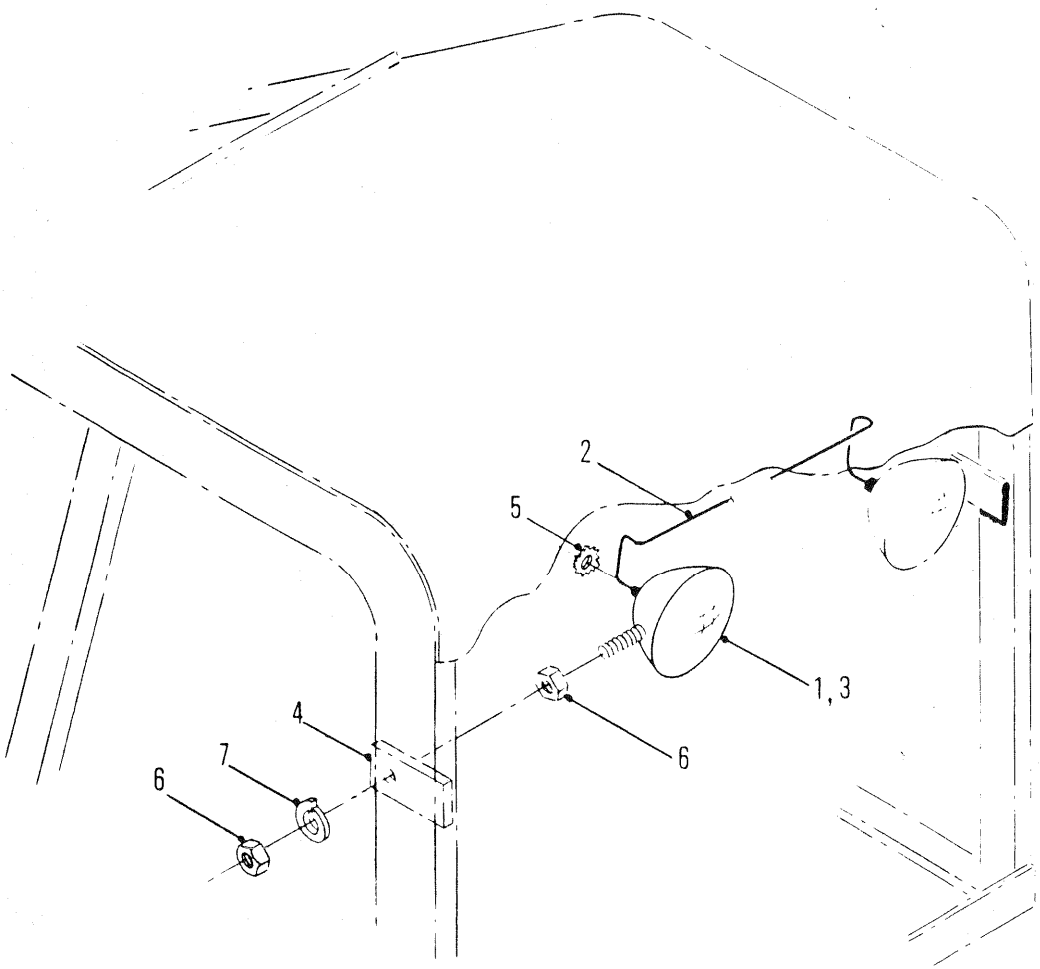


5768TP

**LIGHTS⊠**
**PHARES⊠**
**SCHEINWERFER LEUCHTEN⊠**
**LUZES⊠**
**LUCES⊠**

| No. | Part No. | Qty | Description | Description | Benennung | Descrição | Descripción |
|---|---|---|---|---|---|---|---|
| A | [1]1900890 | 1 | Light kit | | | | |
| 1 | 547529 | 1 | Light assy | assemblage élect | Lichteinheit | conj luzes | conj de luces |
| 2 | 799564 | 1 | Wire | fil | Draht | fio | cable |
| 3 | 944907 | 1 | Sealed beam | barra jointe | Trägerdichtung | farol de milha | viga sellada |
| 4 | 1900638 | 1 | Bracket | support | Winkel | grampo | grampa |
| 5 | 12E000008 | 1 | Washer | rondelle | Scheibe | arruela | arandela |
| 6 | 1D0000008 | 2 | Nut | écrou | Mutter | porca | tuerca |
| 7 | 4E0000008 | 1 | Lockwasher | rondelle frein | Sicherungsscheibe | arruela de pressão | arandela seguridad |

[1] Inc 1➞7

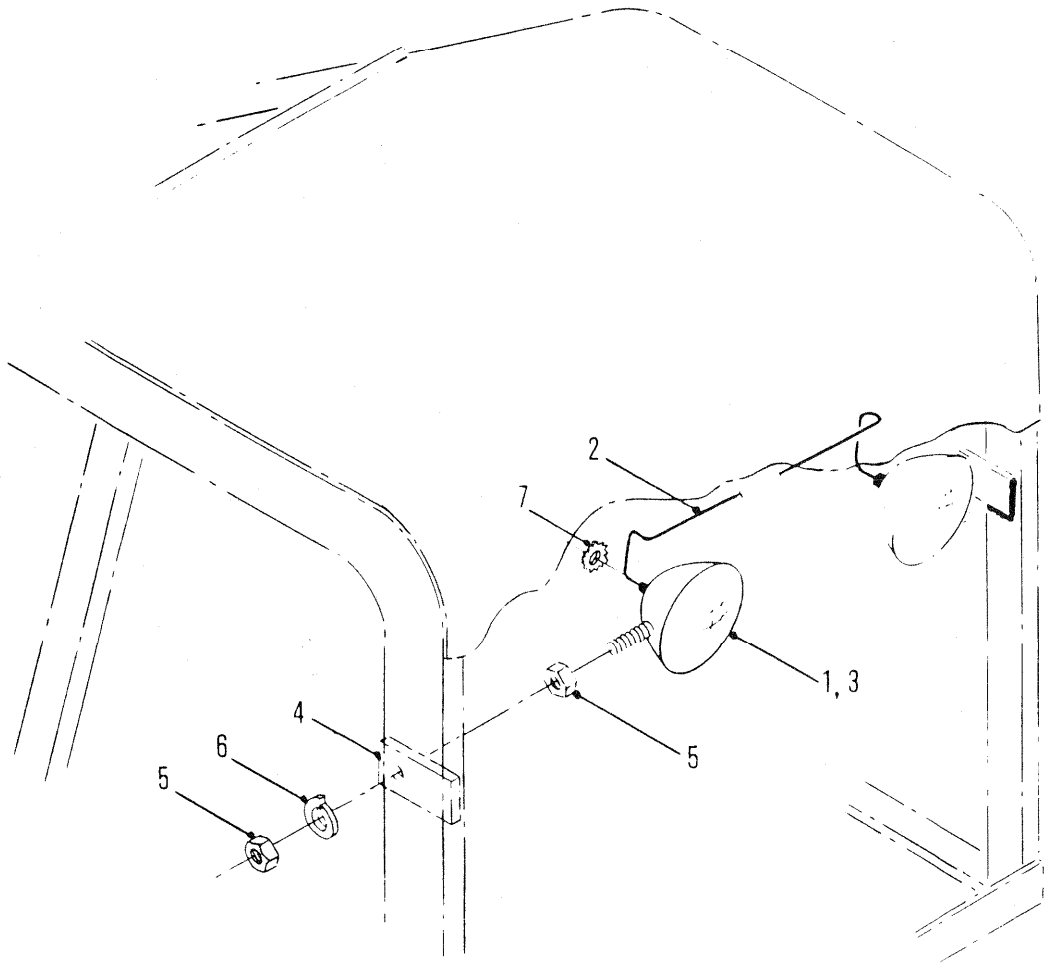


5769TP

**LIGHTS⊠**
**PHARES⊠**
**SCHEINWERFER LEUCHTEN⊠**
**LUZES⊠**
**LUCES⊠**

| No. | Part No. | Qty | Description | Description | Benennung | Descrição | Descripción |
|---|---|---|---|---|---|---|---|
| 1 | **547529** | 1 | Light assy | assemblage élect | Lichteinheit | conj luzes | conj de luces |
| 2 | **583454** | 1 | Wire assy | fil ens | Draht Ens | fio conj | cable conj |
| 3 | **944907** | 1 | Sealed beam | barra jointe | Trägerdichtung | farol de milha | viga sellada |
| 4 | **1900638** | 1 | Bracket | support | Winkel | grampo | grampa |
| 5 | **1D0000008** | 2 | Nut | écrou | Mutter | porca | tuerca |
| 6 | **4E0000008** | 1 | Lockwasher | rondelle frein | Sicherungsscheibe | arruela de pressão | arandela seguridad |
| 7 | **12E000008** | 1 | Lockwasher | rondelle frein | Sicherungsscheibe | arruela de pressão | arandela seguridad |

666CUM 500E-101-CAC→500G-9999-CAC
666GM 513E-101-CAC→513G-9999-CAC

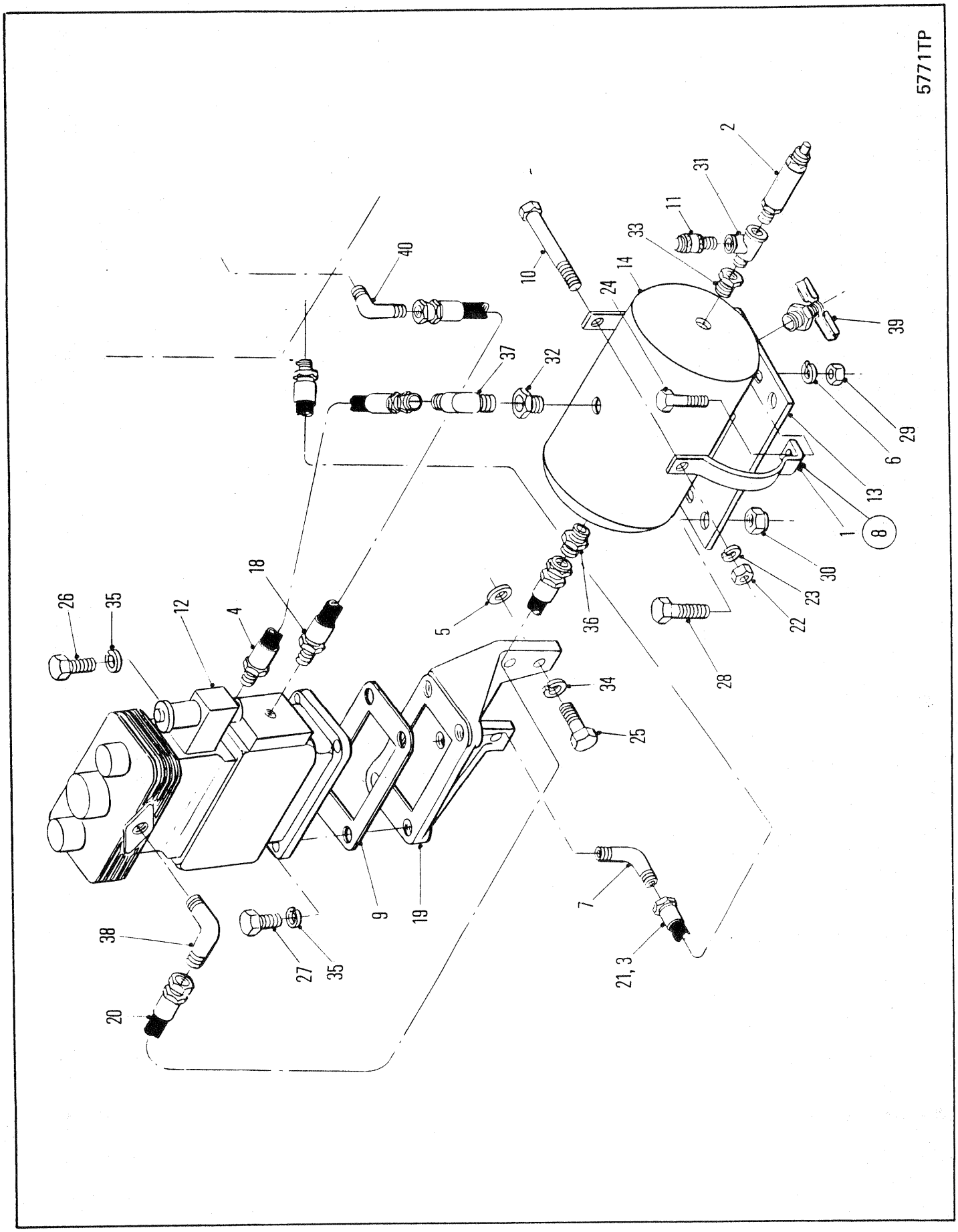
5771TP
1
2
3
4
5
6
7
8
9
10
11
12
13
14
18
19
20
21
22
23
24
25
26
27
28
29
30
31
32
33
34
35
36
37
38
39
40

**AIR COMPRESSOR ⊠**
**COMPRESSEUR D'AIR ⊠**
**LUFTKOMPRESSOR ⊠**
**COMPRESSOR DE AR ⊠**
**COMPRESOR DE AIRE ⊠**

| No. | Part No. | Qty | Description | Description | Benennung | Descrição | Descripción |
|---|---|---|---|---|---|---|---|
| 1 | **505384** | 4 | Band | bande | Band | banda | banda |
| 2 | **507815** | 1 | Safety valve | soupape de sreté | Sicherheitsventil | válvula de segurança | válvula de seguridad |
| 3 | **521429** | 1 | Fitting | ajustage | Verbindung | ajuste | accesorio |
| 4 | **539048** | 1 | Hose | tuyau flexible | Schlauch | mangueira | manguera |
| 5 | ‡**619021** | - | Washer | rondelle | Scheibe | arruela | arandela |
| 6 | **664423** | 4 | Lockwasher | rondelle frein | Sicherungsscheibe | arruela de pressão | arandela seguridad |
| 7 | **940636** | 1 | Elbow | coude | Winkelrohr | cotovêlo | codo |
| 8 | [1]**941214** | 2 | Band assy | bande ens | Band vollst | banda conj | banda conj |
| 9 | **952001** | 1 | Gasket | garniture | Dichtung | gaxeta | empaquetadura |
| 10 | **958653** | 2 | Bolt | boulon | Bolzen | parafuso | bulón |
| 11 | **1902094** | 1 | Check valve | soupape de sureté | Rückshlagventile | válvula de esbarro | válv retención |
| 12 | **1902567** | 1 | Compressor | compresseur | Kompressor | compressor | compresor |
| 13 | **1902570** | 1 | Bracket | support | Winkel | grampo | grampa |
| 14 | **1902571** | 1 | Reservoir | réservoir | Behlter | reservatório | depósito |
| 15 | [2]†**1902572** | 1 | Belt set | assort de courroie | Riemensatz | cinto de segurança | conj cint |
| 16 | [3]†**1902573** | 1 | Belt set | assort de courroie | Riemensatz | cinto de segurança | conj cint |
| 17 | †**1902574** | 1 | Pulley | poulie | Riemenscheibe | polia | polea |
| 18 | **1902593** | 1 | Hose | tuyau flexible | Schlauch | mangueira | manguera |
| 19 | **1902594** | 1 | Bracket | support | Winkel | grampo | grampa |
| 20 | **1902869** | 1 | Hose | tuyau flexible | Schlauch | mangueira | manguera |
| 21 | **1904929** | 1 | Hose | tuyau flexible | Schlauch | mangueira | manguera |
| 22 | **1D000006** | 2 | Nut | écrou | Mutter | porca | tuerca |
| 23 | **4E000006** | 2 | Lockwasher | rondelle frein | Sicherungsscheibe | arruela de pressão | arandela seguridad |
| 24 | **17C000620** | 4 | Bolt | boulon | Bolzen | parafuso | bulón |
| 25 | **17C000624** | 5 | Bolt | boulon | Bolzen | parafuso | bulón |
| 26 | **17C000720** | 1 | Bolt | boulon | Bolzen | parafuso | bulón |
| 27 | **17C000724** | 3 | Bolt | boulon | Bolzen | parafuso | bulón |
| 28 | **17C000824** | 2 | Bolt | boulon | Bolzen | parafuso | bulón |
| 29 | **17D000003** | 4 | Nut | écrou | Mutter | porca | tuerca |
| 30 | **17D000006** | 2 | Locknut | contre-écrou | Gegenmutter | contra porca | contratuerca |
| 31 | **17F000002** | 1 | Tee | raccord T | T-Verbindungsstück | te | te |
| 32 | **19F000002** | 1 | Bushing | chemise | Buchse | bucha | buje |
| 33 | **19F000003** | 1 | Bushing | chemise | Buchse | bucha | buje |
| 34 | **24E000006** | 5 | Lockwasher | rondelle frein | Sicherungsscheibe | arruela de pressão | arandela seguridad |
| 35 | **24E000007** | 4 | Lockwasher | rondelle frein | Sicherungsscheibe | arruela de pressão | arandela seguridad |
| 36 | **38F000009** | 1 | Connector | raccord | Verbindungsstück | ligador | conector |
| 37 | **42F000003** | 1 | Elbow | coude | Winkelrohr | cotovêlo | codo |
| 38 | **42F000009** | 1 | Elbow | coude | Winkelrohr | cotovêlo | codo |
| 39 | **72F000002** | 1 | Drain cock | robinet vidange | Abflusshahn | torneira purga | grifo purga |
| 40 | **83F000003** | 1 | Elbow | coude | Winkelrohr | cotovêlo | codo |

[1] Inc 1,10,22&23

[2] 664

[3] 666

666CUM 500E-101-CAC→500E-9999-CAC
666GM 513E-101-CAC→513E-9999-CAC

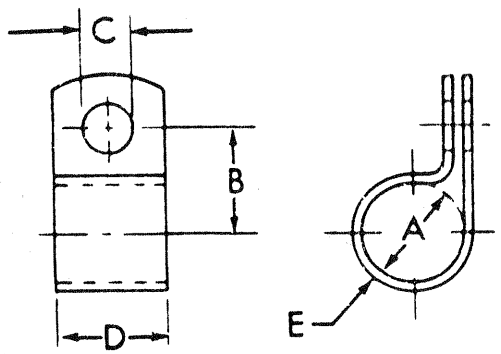


| No. | Part No. | A | | B | | C | | D | | E | |
|---|---|---|---|---|---|---|---|---|---|---|---|
| 1 | 6H-04 | 1/4 | 6.35 | 5/8 | 15.87 | 13/32 | 10.32 | 3/4 | 19.05 | .032 | 0.81 |
| 2 | 6H-06 | 1/4 | 6.35 | 25/32 | 19.84 | 17/32 | 13.49 | 7/8 | 22.22 | .032 | 0.81 |
| 3 | 6H-09 | 5/16 | 7.94 | 21/32 | 16.67 | 13/32 | 10.32 | 3/4 | 19.05 | .032 | 0.81 |
| 4 | 6H-30 | 1/2 | 12.70 | 3/4 | 19.05 | 13/32 | 10.32 | 3/4 | 19.05 | .048 | 1.22 |
| 5 | 6H-41 | 7/8 | 22.22 | 1-1/16 | 26.99 | 13/32 | 10.32 | 3/4 | 19.05 | .060 | 1.52 |
| 6 | 6H-20 | 1 | 25.40 | 1-3/16 | 30.16 | 13/32 | 10.32 | 7/8 | 22.22 | .060 | 1.52 |
| 7 | 6H-34 | 1-1/4 | 31.75 | 1-11/32 | 34.13 | 13/32 | 10.32 | 7/8 | 22.22 | .060 | 1.52 |
| 8 | 6H-42 | 1-3/8 | 34.92 | 1-17/32 | 38.89 | 17/32 | 13.49 | 1-1/8 | 28.57 | .060 | 1.52 |
| 9 | 6H-28 | 1-1/2 | 38.10 | 1-1/2 | 38.10 | 13/32 | 10.32 | 7/8 | 22.22 | .060 | 1.52 |
| 10 | 6H-35 | 1-5/8 | 40.27 | 1-9/16 | 39.67 | 13/32 | 10.32 | 7/8 | 22.22 | .060 | 1.52 |

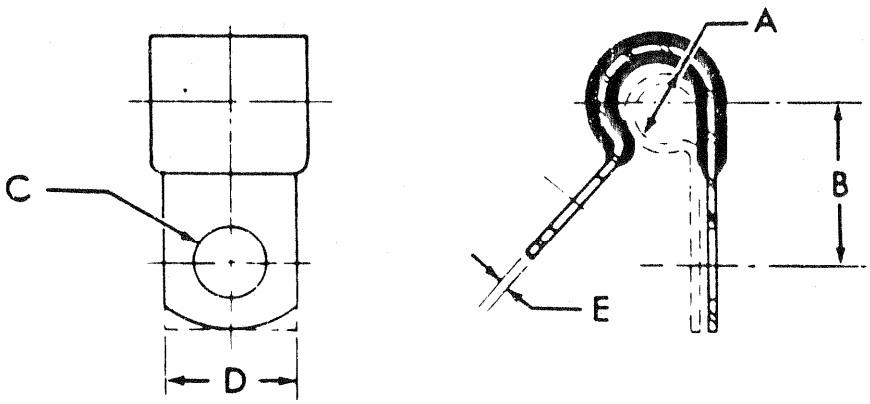


| No. | Part No. | A | | B | | C | | D | | E | |
|---|---|---|---|---|---|---|---|---|---|---|---|
| 11 | 30H-11 | 3/16 | 4.76 | 9/16 | 14.29 | 11/32 | 8.73 | 5/8 | 15.87 | .032 | 0.81 |
| 12 | 30H-12 | 3/16 | 4.76 | 5/8 | 15.87 | 13/32 | 10.71 | 3/4 | 19.05 | .032 | 0.81 |
| 13 | 30H-13 | 1/4 | 6.35 | 1/2 | 12.70 | 7/32 | 5.55 | 7/16 | 11.11 | .032 | 0.81 |
| 14 | 30H-14 | 1/4 | 6.35 | 17/32 | 13.49 | 9/32 | 7.14 | 1/2 | 12.70 | .032 | 0.81 |
| 15 | 30H-16 | 1/4 | 6.35 | 21/32 | 16.67 | 13/32 | 10.32 | 3/4 | 19.05 | .032 | 0.81 |
| 16 | 30H-20 | 5/16 | 7.94 | 11/16 | 17.46 | 13/32 | 10.32 | 3/4 | 19.05 | .032 | 0.81 |
| 17 | 30H-23 | 3/8 | 9.52 | 23/32 | 18.25 | 13/32 | 10.32 | 3/4 | 19.05 | .032 | 0.81 |
| 18 | 30H-62 | 3/8 | 9.52 | 27/32 | 21.43 | 17/32 | 13.49 | 1 | 25.40 | .032 | 0.81 |
| 19 | 30H-30 | 1/2 | 12.70 | 23/32 | 18.25 | 11/32 | 8.73 | 5/8 | 15.87 | .048 | 1.22 |
| 20 | 30H-31 | 1/2 | 12.70 | 25/32 | 19.84 | 13/32 | 10.32 | 3/4 | 19.05 | .048 | 1.22 |
| 21 | 30H-35 | 9/16 | 14.29 | 13/16 | 20.64 | 13/32 | 10.32 | 3/4 | 19.05 | .048 | 1.22 |
| 22 | 30H-38 | 5/8 | 15.87 | 27/32 | 21.43 | 13/32 | 10.32 | 3/4 | 19.05 | .048 | 1.22 |
| 23 | 30H-42 | 11/16 | 17.46 | 7/8 | 22.22 | 13/32 | 10.32 | 3/4 | 19.05 | .048 | 1.22 |
| 24 | 30H-45 | 13/16 | 20.64 | 7/8 | 22.22 | 11/32 | 8.73 | 5/8 | 25.40 | .048 | 1.22 |
| 25 | 30H-46 | 13/16 | 20.64 | 15/16 | 23.81 | 13/32 | 10.32 | 3/4 | 19.05 | .048 | 1.22 |
| 26 | 30H-47 | 13/16 | 20.64 | 1 | 25.40 | 15/32 | 11.90 | 7/8 | 22.22 | .048 | 1.22 |
| 27 | 30H-50 | 15/16 | 23.81 | 1 | 25.40 | 13/32 | 10.32 | 3/4 | 19.05 | .048 | 1.22 |
| 28 | 30H-52 | 15/16 | 23.81 | 1-1/8 | 28.57 | 17/32 | 13.49 | 1 | 25.40 | .048 | 1.22 |
| 29 | 30H-60 | 1-7/16 | 36.51 | 1-1/4 | 31.75 | 13/32 | 10.31 | 3/4 | 19.05 | .048 | 1.22 |

5779TP (1 OF 2)

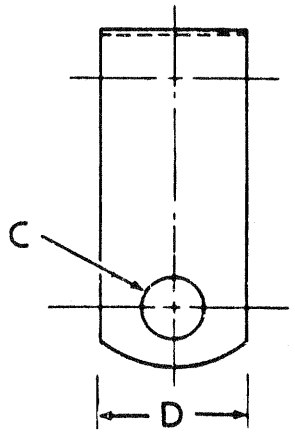


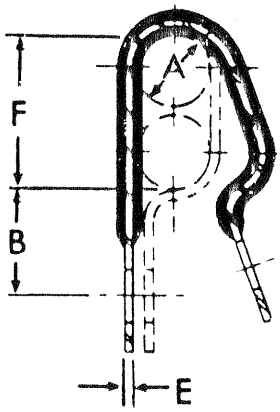


| No. | Part No. | | A | | B | | C | | D | | E | | F |
|---|---|---|---|---|---|---|---|---|---|---|---|---|---|
| 30 | 31H-09 | 1/4 | 6.35 | 3/8 | 9.52 | 7/32 | 5.55 | 7/16 | 11.11 | .050 | 1.27 | 1/2 | 12.70 |
| 31 | 31H-19 | 3/8 | 9.52 | 17/32 | 13.49 | 13/32 | 10.32 | 3/4 | 19.05 | .050 | 1.27 | 3/4 | 19.05 |
| 32 | 31H-20 | 3/8 | 9.52 | 19/32 | 15.08 | 15/32 | 11.90 | 7/8 | 22.22 | .050 | 1.27 | 3/4 | 19.05 |
| 33 | 31H-31 | 9/16 | 14.29 | 17/32 | 13.49 | 13/32 | 10.32 | 3/4 | 19.05 | .050 | 1.27 | 1-1/8 | 28.57 |
| 34 | 31H-34 | 5/8 | 15.87 | 17/32 | 13.49 | 13/32 | 10.32 | 3/4 | 19.05 | .050 | 1.27 | 1-1/4 | 31.75 |
| 35 | 31H-35 | 5/8 | 15.87 | 21/32 | 16.67 | 15/32 | 11.90 | 7/8 | 22.22 | .050 | 1.27 | 1-1/4 | 31.75 |
| 36 | 31H-36 | 5/8 | 15.87 | 21/32 | 16.67 | 17/32 | 13.49 | 1 | 25.40 | .050 | 1.27 | 1-1/4 | 31.75 |
| 37 | 31H-40 | 11/16 | 17.46 | 15/32 | 11.90 | 17/32 | 13.49 | 1 | 25.40 | .050 | 1.27 | 1-3/8 | 34.92 |
| 38 | 31H-45 | 15/16 | 23.81 | 13/32 | 10.31 | 11/32 | 8.73 | 5/8 | 15.87 | .062 | 1.57 | 1-7/8 | 47.62 |
| 39 | 31H-46 | 15/16 | 23.81 | 19/32 | 15.08 | 13/32 | 10.32 | 3/4 | 19.05 | .062 | 1.57 | 1-7/8 | 47.62 |

5779TP(2 OF 2)

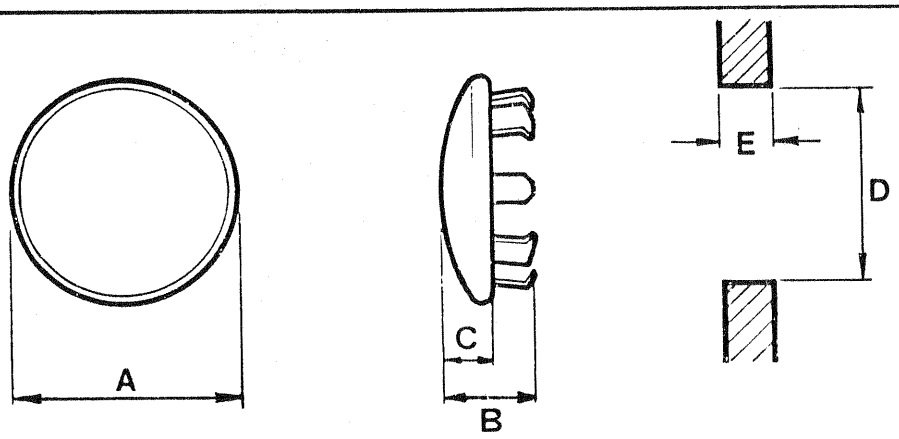


| PART NO. | A | | B | | C | | D | | E | |
|---|---|---|---|---|---|---|---|---|---|---|
| | IN | MM | IN | MM | IN | MM | IN | MM | IN | MM |
| 661862 | 1/2 | 12.7 | 1/4 | 6.35 | 1/16 | 15.24 | 13/62 | 10.319 | .062 - .078 | 1.5748 - 1.9812 |
| 696073 | 51/64 | 20.638 | 19/64 | 7.541 | 5/64 | 1.984 | 5/8 | 15.875 | .062 - .109 | 1.5748 - 2.7686 |
| 743208 | 1-1/16 | 26.98 | 3/8 | 9.525 | 5/64 | 1.984 | 7/8 | 22.2250 | .125 - .171 | 3.175 - 4.318 |
| 1310761 | 21/32 | 16.669 | 7/32 | 5.556 | 5/64 | 1.984 | 7/16 | 11.112 | .037 - .047 | .9398 - 1.1938 |
| 743200 | .62 | 15.798 | .36 | 9.144 | .06 | 1.524 | .47 | 11.938 | .083 - .125 | 2.1082 - 3.175 |
| 1300057 | .656 | 16.662 | .265 | 6.731 | .078 | 1.981 | 1/2 | 12.700 | .037 - .062 | 9.398 - 15.748 |

5993TP

INTENTIONALLY BLANK

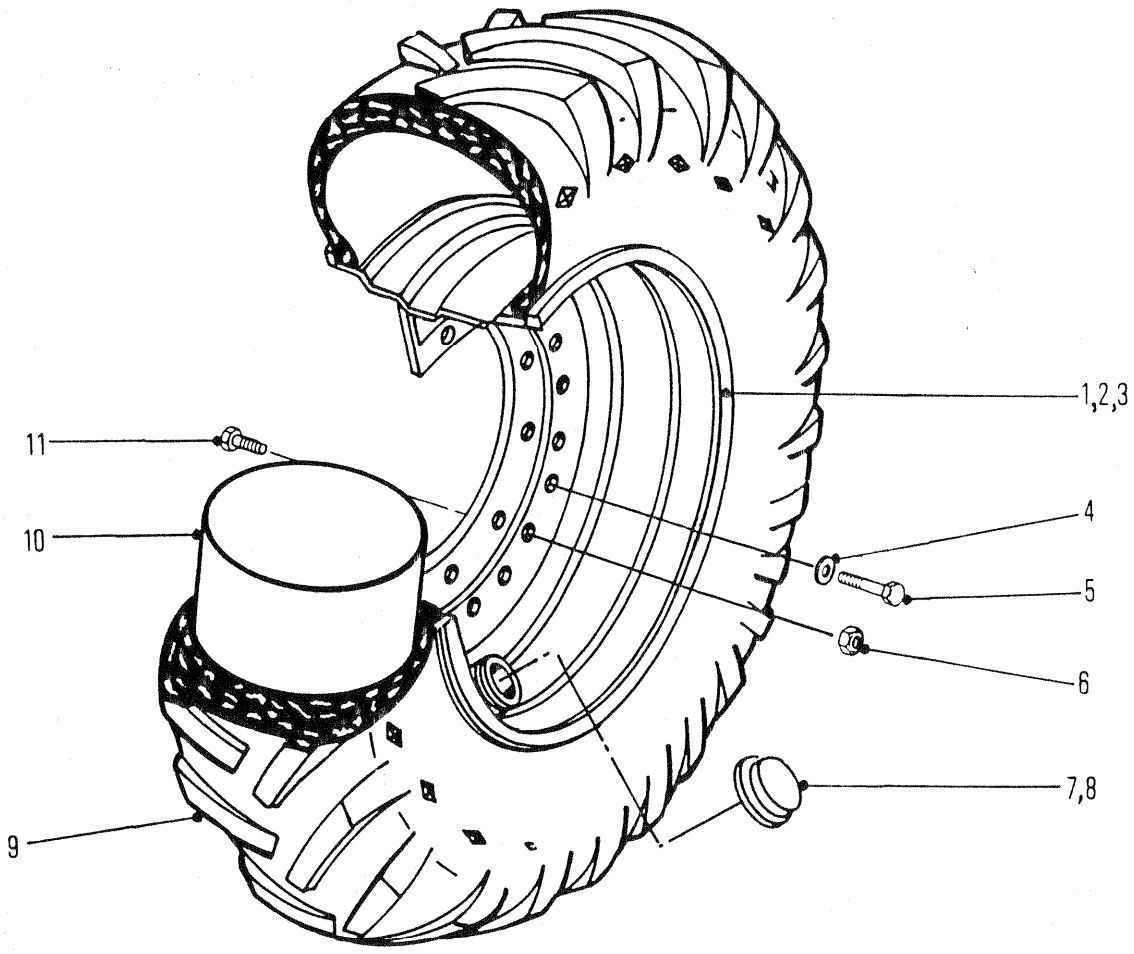


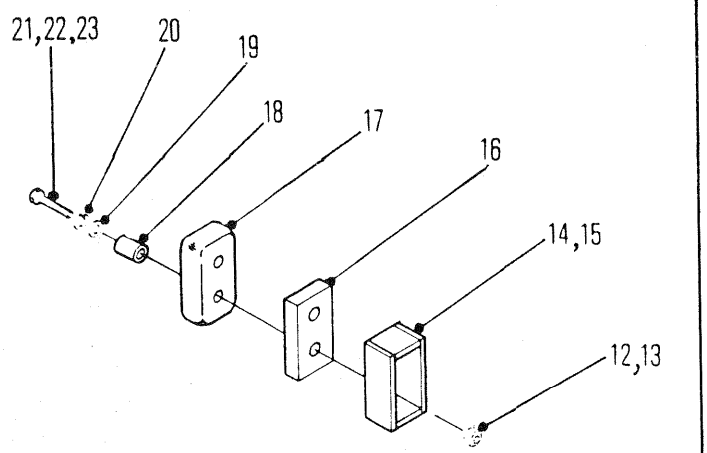


5988TP

# RIM ASSEMBLY - 30.5 X 32 TIRES
# ASSEMBLAGE DE LA JANTE - 30.5 X 32 PNEUMATIQUE
# FELGENEINHEIT - 30.5 X 32 REIFEN
# CONJUNTO DE AROS - 30.5 X 32 PNEUMÁTICO
# CONJUNTO ILANTA - 30.5 X 32 NEUMÁTICO

| No. | Part No. | Qty | Description | Description | Benennung | Descrição | Descripción |
|---|---|---|---|---|---|---|---|
| 1 | [1]1909079 | 4 | Rim | jante | Felgen | aros | llanta |
| 2 | [2]1904341 | 4 | Rim | jante | Felgen | aros | llanta |
| 3 | --------- | - | Rim | jante | Felgen | aros | llanta |
| 4 | --------- | - | Lockwasher | rondelle frein | Sicherungsscheibe | arruela de pressão | arandela seguridad |
| 5 | --------- | - | Bolt | boulon | Bolzen | parafuso | bulón |
| 6 | --------- | - | Nut | écrou | Mutter | porca | tuerca |
| 7 | 1909047 | 4 | Cap | chapeau | Kappe | tampa | tapa |
| 8 | --------- | - | Cap | chapeau | Kappe | tampa | tapa |
| 9 | --------- | - | Tire | pneumatique | Reifen | pneumático | neumático |
| 10 | --------- | - | Tube | tube | Rohr | tubo | tubo |
| 11 | --------- | 40 | Bolt | boulon | Bolzen | parafuso | bulón |
| 12 | 18D000006 | 4 | Nut | écrou | Mutter | porca | tuerca |
| 13 | --------- | - | Nut | écrou | Mutter | porca | tuerca |
| 14 | [1]1905297 | 2 | Stop | butoir | Anschlag | batente | tope |
| 15 | [2]1909062 | 2 | Stop | butoir | Anschlag | batente | tope |
| 16 | --------- | - | Spacer | entretoise | Distanzteil | espaçador | espaciador |
| 17 | 1907930 | 2 | Stop | butoir | Anschlag | batente | tope |
| 18 | 1907935 | 4 | Spacer | entretoise | Distanzteil | espaçador | espaciador |
| 19 | 25E000018 | 4 | Washer | rondelle | Scheibe | arruela | arandela |
| 20 | --------- | - | Lockwasher | rondelle frein | Sicherungsscheibe | arruela de pressão | arandela seguridad |
| 21 | 18C000656 | 4 | Bolt | boulon | Bolzen | parafuso | bulón |
| 22 | --------- | - | Bolt | boulon | Bolzen | parafuso | bulón |
| 23 | --------- | - | Bolt | boulon | Bolzen | parafuso | bulón |

[1] □500D-101➡1113-CAC with Wide Track FD&RD 17600 series axles
[1] □500D-101➡1113-CAC avec dessieux FD&RD 17600 à large voie
[1] □500D-101➡1113-CAC mit Breitspur Achsen FD&RD 17600
[1] □500D-101➡1113-CAC equipados com eixos FD&RD 17600 de via larga
[1] □500D-101➡1113-CAC provista de ejes FD&RD 17600 de via ancha

[2] □ 500D-1338➡9999-CAC with FD 17800&RD 19600 series axle with 1909414 winch mounting plate
[2] □ 500D-1338➡9999-CAC avec dessieux séries FD 17800& Rd 19600 avec la plaque de fixation de treuil
[2] □ 500D-1338➡9999-CAC mit Achsen, serien FD 17800&RD 19600 mit Windenfefestigungsplatte 1909414
[2] □ 500D-1338➡9999-CAC com eixos FD 17800&RD 19600 com a placa de fixação do guincho 1909414
[2] □ 500D-1338➡9999-CAC con ejes serie FD 17800&RD 19600 con la placa de montaje de guinche 1909414

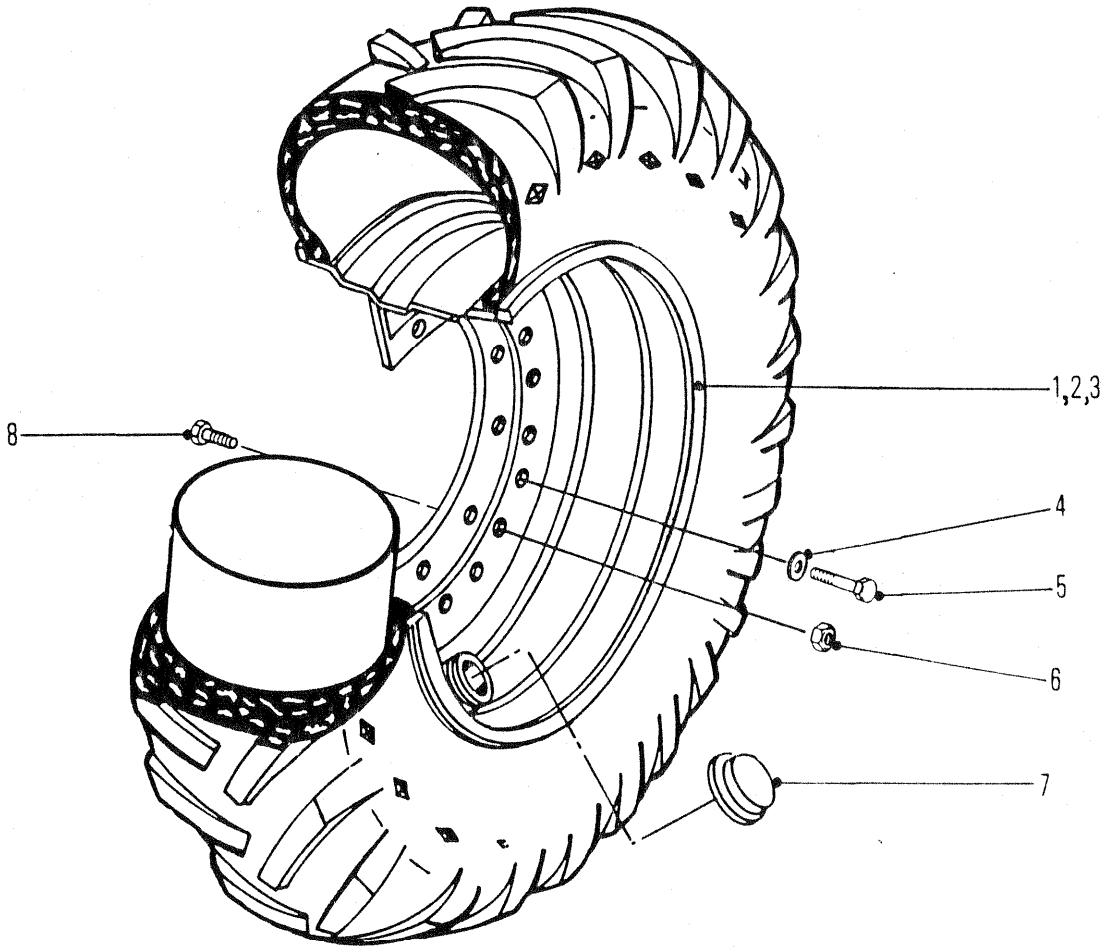


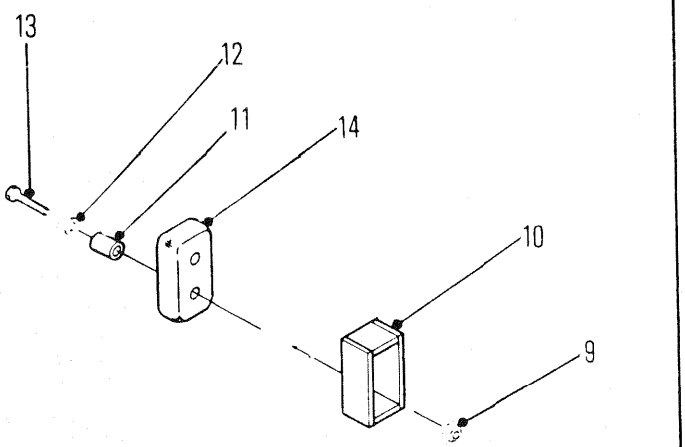


5988TP

# RIM ASSEMBLY - 28.1 X 26 TIRES
# ASSEMBLAGE DE LA JANTE - 28.1 X 26 PNEUMATIQUE
# FELGENEINHEIT - 28.1 X 26 REIFEN
# CONJUNTO DE AROS - 28.1 X 26 PNEUMÁTICO
# CONJUNTO ILANTA - 28.1 X 26 NEUMÁTICO

| No. | Part No. | Qty | Description | Description | Benennung | Descrição | Descripción |
|---|---|---|---|---|---|---|---|
| 1 | **1905373** | 4 | Rim | jante | Felgen | aros | llanta |
| 2 | **1901317** | 4 | Rim | jante | Felgen | aros | llanta |
| 3 | **1914666** | 4 | Rim | jante | Felgen | aros | llanta |
| 4 | **23E000008** | 12 | Lockwasher | rondelle frein | Sicherungsscheibe | arruela de pressão | arandela seguridad |
| 5 | **17C000816** | 12 | Bolt | boulon | Bolzen | parafuso | bulón |
| 6 | **103522** | 40 | Nut | écrou | Mutter | porca | tuerca |
| 7 | **1909047** | 4 | Cap | chapeau | Kappe | tampa | tapa |
| 8 | **1991829** | 40 | Bolt | boulon | Bolzen | parafuso | bulón |
| 9 | **18D000006** | 4 | Nut | écrou | Mutter | porca | tuerca |
| 10 | **1901775** | 2 | Stop | butoir | Anschlag | batente | tope |
| 11 | **1907935** | 4 | Spacer | entretoise | Distanzteil | espaçador | espaciador |
| 12 | **25E000018** | 4 | Washer | rondelle | Scheibe | arruela | arandela |
| 13 | **18C000656** | 4 | Bolt | boulon | Bolzen | parafuso | bulón |
| 14 | **1907930** | 2 | Steering stop | arrêt de direction | Lenkanschlag | batente da direção | direc-parada |

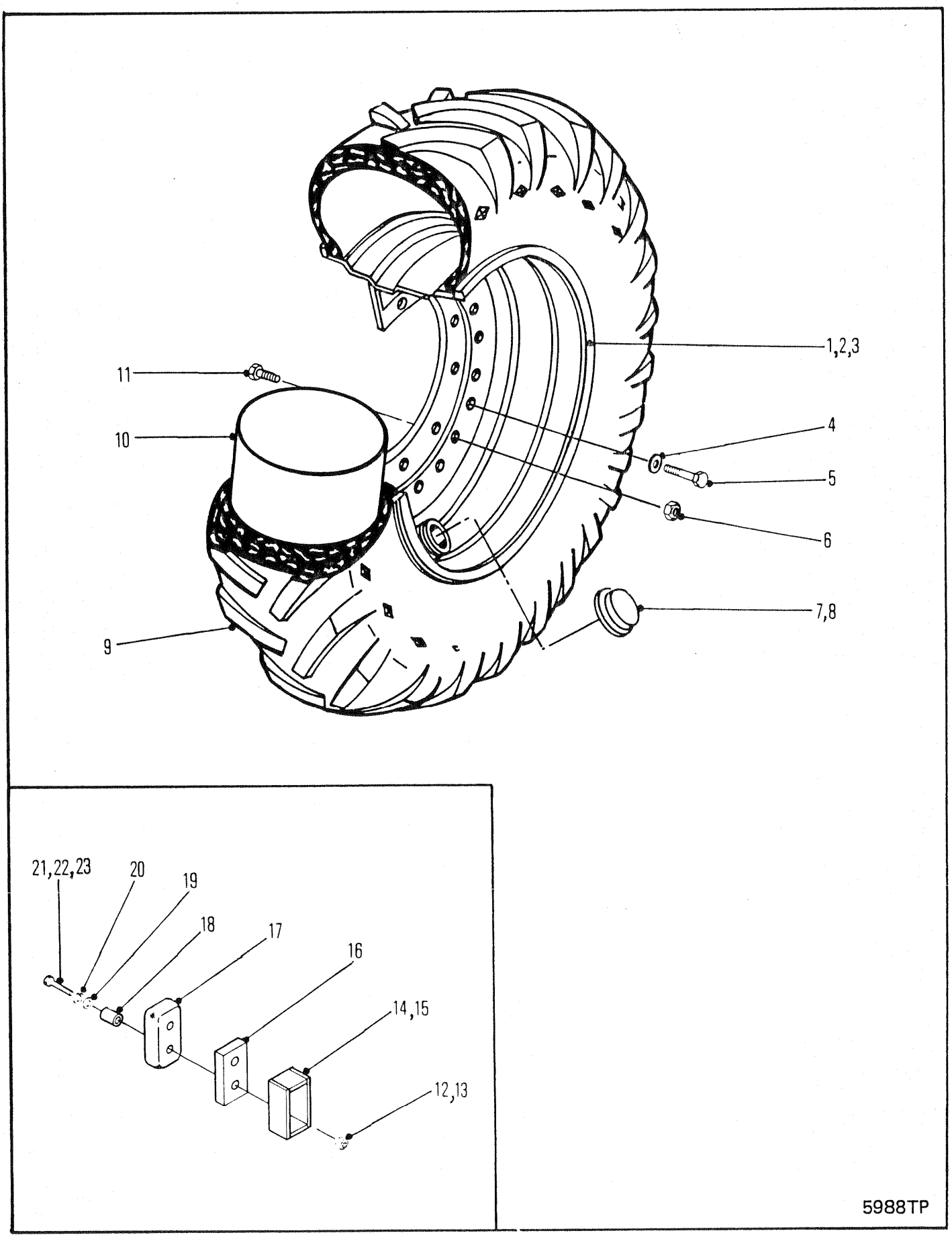
1,2,3
11
10
4
5
6
7,8
9
21,22,23
20
19
18
17
16
14,15
12,13
5988TP

# RIM ASSEMBLY - 24.5 X 32 TIRES
# ASSEMBLAGE DE LA JANTE - 24.5 X 32 PNEUMATIQUE
# FELGENEINHEIT - 24.5 X 32 REIFEN
# CONJUNTO DE AROS - 24.5 X 32 PNEUMÁTICO
# CONJUNTO ILANTA - 24.5 X 32 NEUMÁTICO

| No. | Part No. | Qty | Description | Description | Benennung | Descrição | Descripción |
|---|---|---|---|---|---|---|---|
| 1 | [1]1909080 | 4 | Rim | jante | Felgen | aros | llanta |
| 2 | [2,3]1901977 | 4 | Rim | jante | Felgen | aros | llanta |
| 3 | --------- | - | Rim | jante | Felgen | aros | llanta |
| 4 | [1]23E000016 | 12 | Lockwasher | rondelle frein | Sicherungsscheibe | arruela de pressão | arandela seguridad |
| 5 | [1]17C001624 | 12 | Bolt | boulon | Bolzen | parafuso | bulón |
| 6 | [1]103522 | 40 | Nut | écrou | Mutter | porca | tuerca |
| 7 | [1]1909047 | 4 | Cap | chapeau | Kappe | tampa | tapa |
| 8 | [2,3]1914255 | 4 | Cap | chapeau | Kappe | tampa | tapa |
| 9 | --------- | - | Tire | pneumatique | Reifen | pneumático | neumático |
| 10 | --------- | - | Tube | tube | Rohr | tubo | tubo |
| 11 | [1]1991829 | 40 | Bolt | boulon | Bolzen | parafuso | bulón |
| 12 | [2,3]18D000006 | 4 | Nut | écrou | Mutter | porca | tuerca |
| 13 | [1]17D000003 | 4 | Nut | écrou | Mutter | porca | tuerca |
| 14 | [1]1903102 | 2 | Stop | butoir | Anschlag | batente | tope |
| 15 | [2,3]1901775 | 2 | Stop | butoir | Anschlag | batente | tope |
| 16 | [2,3]1901771 | 4 | Spacer | entretoise | Distanzteil | espaçador | espaciador |
| 17 | 1907930 | 2 | Stop | butoir | Anschlag | batente | tope |
| 18 | 1907935 | 4 | Spacer | entretoise | Distanzteil | espaçador | espaciador |
| 19 | 25E000018 | 4 | Washer | rondelle | Scheibe | arruela | arandela |
| 20 | --------- | - | Lockwasher | rondelle frein | Sicherungsscheibe | arruela de pressão | arandela seguridad |
| 21 | [1]17C000624 | 4 | Bolt | boulon | Bolzen | parafuso | bulón |
| 22 | [2]18C000656 | 4 | Bolt | boulon | Bolzen | parafuso | bulón |
| 23 | [3]18C000666 | 4 | Bolt | boulon | Bolzen | parafuso | bulón |

[1] ☐ 500D-101➡113-CAC equipped with Wide Track FD & RD 17600 series axles
[1] ☐ 500D-101➡1113-CAC équip és dessieux FD & _1113-CAC équipés dessieux FD & RD
[1] ☐ 500D-101➡1113-CAC mit Breitspur FD & RD 17600
[1] ☐ 500D-101➡1113-CAC com FD & RD 17600 de via larga
[1] ☐ 500D-101➡1113-CAC con FD & RD 17600 de vía ancha

[2] ☐ 500D-1338➡9999-CAC with FD 17800&RD 19600 series axle with 1909414 winch mounting plate
[2] ☐ 500D-1338➡9999-CAC avec dessieux séries FD 17800&RD 19600 avec la plaque de fixation de treuil 1909414
[2] ☐ 500D-1338➡9999-CAC mit Achsen, Serien FD 17800&RD 19600 mit Windenfefestigungsplatte 1909414
[2] ☐ 500D-1338➡9999-CAC com eixos FD 17800&RD 19600 com a placa de fixação do guincho 1909414
[2] ☐ 500D-1338➡9999-CAC con ejes serie FD 17800&RD 19600 con la placa de montaje de guinche 1909414

[3] ☐ C-9044-1727➡9999 with FD & RD 17800 series axle
[3] ☐ C-9044-1727➡9999 avec dessieu séries FD & RD 17800
[3] ☐ C-9044-1727➡9999 mit Achsen, Serien FD & RD 17800
[3] ☐ C-9044-1727➡9999 com eixo da série FD & RD 17800
[3] ☐ C-9044-1727➡9999 con ejes serie FD & RD 17800

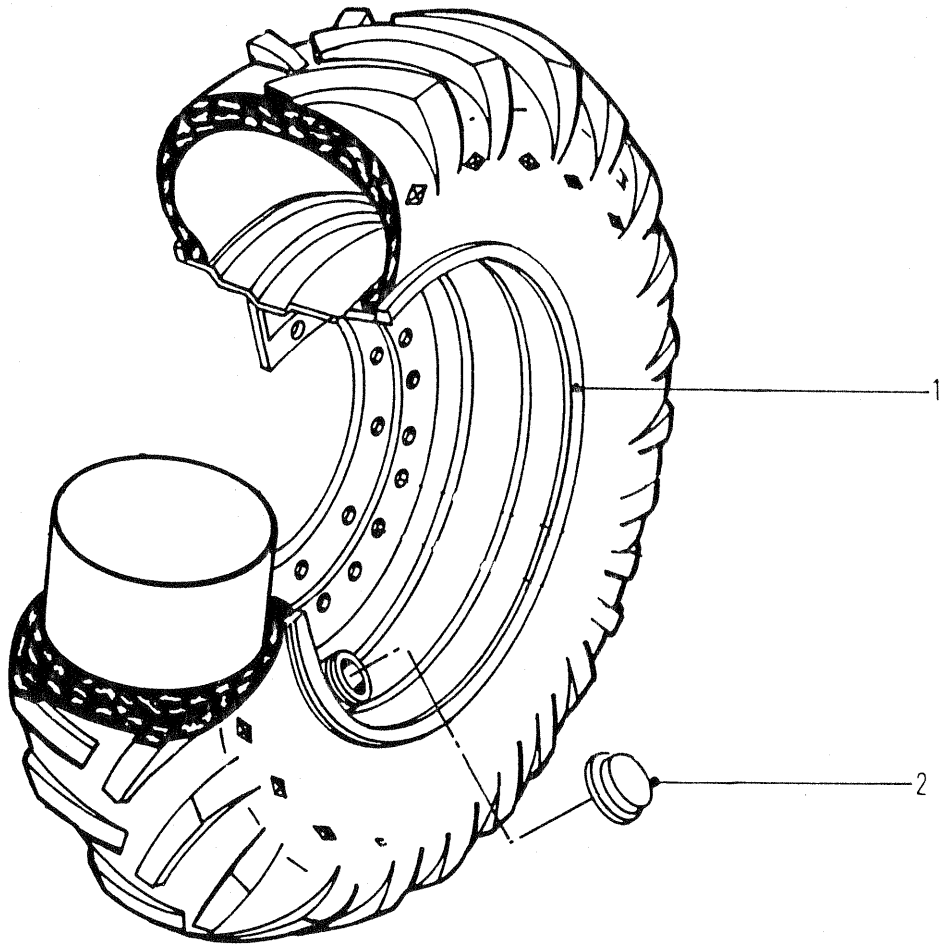


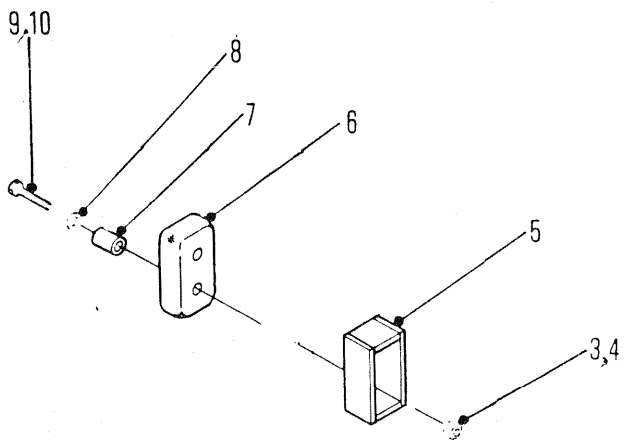


5988TP

# RIM ASSEMBLY - 23.1 X 26 TIRES
# ASSEMBLAGE DE LA JANTE - 23.1 X 26 PNEUMATIQUE
# FELGENEINHEIT - 23.1 X 26 REIFEN
# CONJUNTO DE AROS - 23.1 X 26 PNEUMÁTICO
# CONJUNTO ILANTA - 23.1 X 26 NEUMÁTICO

| No. | Part No. | Qty | Description | Description | Benennung | Descrição | Descripción |
|---|---|---|---|---|---|---|---|
| 1 | **1914662** | 4 | Rim | jante | Felgen | aros | llanta |
| 2 | **1909047** | 4 | Cap | chapeau | Kappe | tampa | tapa |
| 3 | **17D000003** | 4 | Nut | écrou | Mutter | porca | tuerca |
| 4 | **18D000006** | 4 | Nut | écrou | Mutter | porca | tuerca |
| 5 | **1901775** | 2 | Stop | butoir | Anschlag | batente | tope |
| 6 | **1907930** | 2 | Steering stop | arrêt de direction | Lenkanschlag | batente da direção | direc-parada |
| 7 | **1907935** | 4 | Spacer | entretoise | Distanzteil | espaçador | espaciador |
| 8 | **25E000018** | 4 | Washer | rondelle | Scheibe | arruela | arandela |
| 9 | **17C000624** | 4 | Bolt | boulon | Bolzen | parafuso | bulón |
| 10 | **17C000656** | 4 | Bolt | boulon | Bolzen | parafuso | bulón |

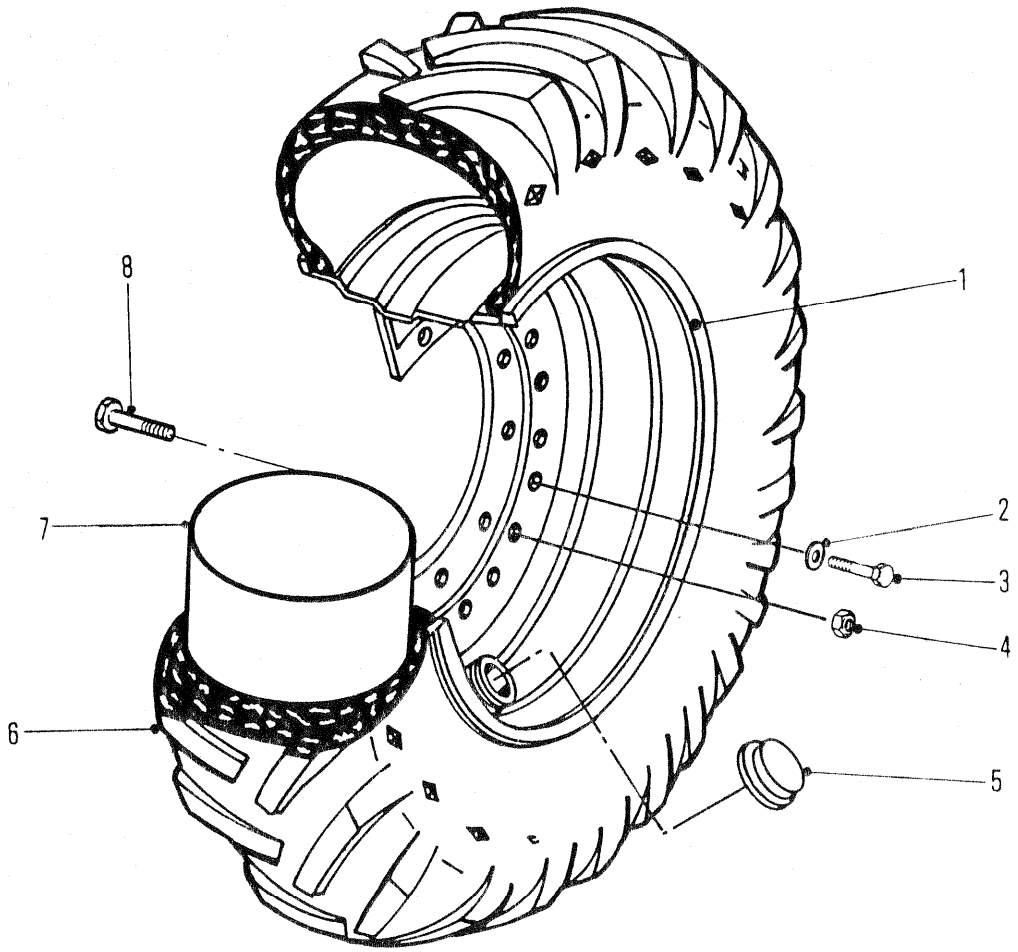


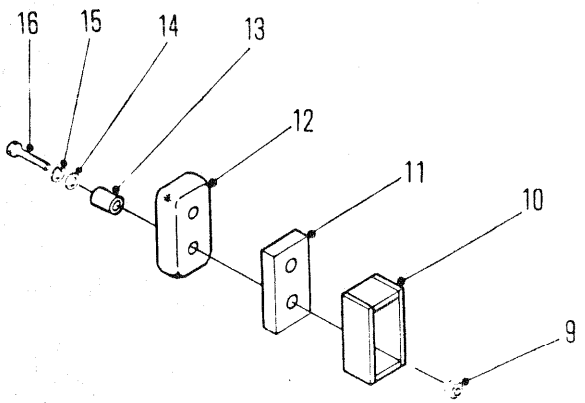


5986TP

**RIM ASSEMBLY - 18.4 X 38 TIRES**
**ASSEMBLAGE DE LA JANTE - 18.4 X 38 PNEUMATIQUE**
**FELGENEINHEIT - 18.4 X 38 REIFEN**
**CONJUNTO DE AROS - 18.4 X 38 PNEUMÁTICO**
**CONJUNTO ILANTA - 18.4 X 38 NEUMÁTICO**

| No. | Part No. | Qty | Description | Description | Benennung | Descrição | Descripción |
|---|---|---|---|---|---|---|---|
| 1 | **1903441** | 4 | Rim | jante | Felgen | aros | llanta |
| 2 | --------- | - | Lockwasher | rondelle frein | Sicherungsscheibe | arruela de pressão | arandela seguridad |
| 3 | --------- | - | Bolt | boulon | Bolzen | parafuso | bulón |
| 4 | --------- | - | Nut | écrou | Mutter | porca | tuerca |
| 5 | **1909047** | 4 | Cap | chapeau | Kappe | tampa | tapa |
| 6 | --------- | - | Tire | pneumatique | Reifen | pneumático | neumático |
| 7 | --------- | - | Tube | tube | Rohr | tubo | tubo |
| 8 | --------- | - | Bolt | boulon | Bolzen | parafuso | bulón |
| 9 | **17D000003** | 4 | Nut | écrou | Mutter | porca | tuerca |
| 10 | **1905297** | 2 | Stop | butoir | Anschlag | batente | tope |
| 11 | --------- | - | Spacer | entretoise | Distanzteil | espaçador | espaciador |
| 12 | **1907930** | 2 | Stop | butoir | Anschlag | batente | tope |
| 13 | **1907935** | 4 | Spacer | entretoise | Distanzteil | espaçador | espaciador |
| 14 | **25E000018** | 4 | Washer | rondelle | Scheibe | arruela | arandela |
| 15 | --------- | - | Lockwasher | rondelle frein | Sicherungsscheibe | arruela de pressão | arandela seguridad |
| 16 | **17C000624** | 4 | Bolt | boulon | Bolzen | parafuso | bulón |

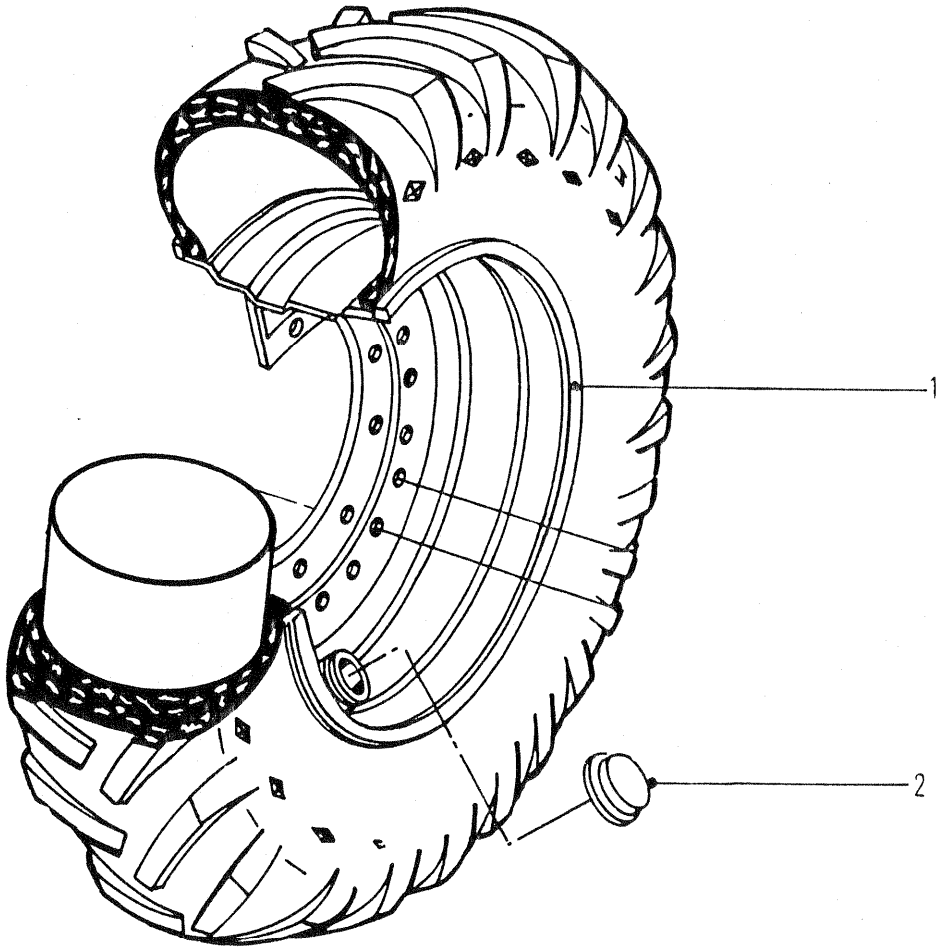


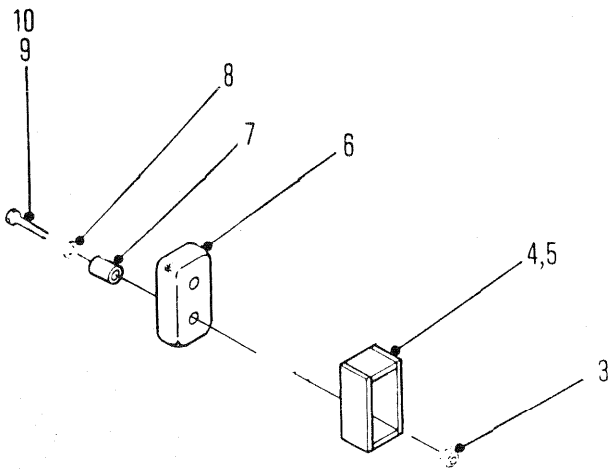


5988TP

# RIM ASSEMBLY - 18.4 X 34 TIRES
# ASSEMBLAGE DE LA JANTE - 18.4 X 34 PNEUMATIQUE
# FELGENEINHEIT - 18.4 X 34 REIFEN
# CONJUNTO DE AROS - 18.4 X 34 PNEUMÁTICO
# CONJUNTO ILANTA - 18.4 X 34 NEUMÁTICO

| No. | Part No. | Qty | Description | Description | Benennung | Descrição | Descripción |
|---|---|---|---|---|---|---|---|
| 1 | **1900350** | 4 | Rim | jante | Felgen | aros | llanta |
| 2 | **1914255** | 4 | Cap | chapeau | Kappe | tampa | tapa |
| 3 | **18D000006** | 4 | Nut | écrou | Mutter | porca | tuerca |
| 4 | **1901775** | 2 | Stop | butoir | Anschlag | batente | tope |
| 5 | **1906274** | 2 | Stop | butoir | Anschlag | batente | tope |
| 6 | **1907930** | 2 | Steering stop | arrêt de direction | Lenkanschlag | batente da direção | direc-parada |
| 7 | **1907935** | 4 | Spacer | entretoise | Distanzteil | espaçador | espaciador |
| 8 | **25E000018** | 4 | Washer | rondelle | Scheibe | arruela | arandela |
| 9 | **17C000624** | 4 | Bolt | boulon | Bolzen | parafuso | bulón |
| 10 | **18C000656** | 4 | Bolt | boulon | Bolzen | parafuso | bulón |

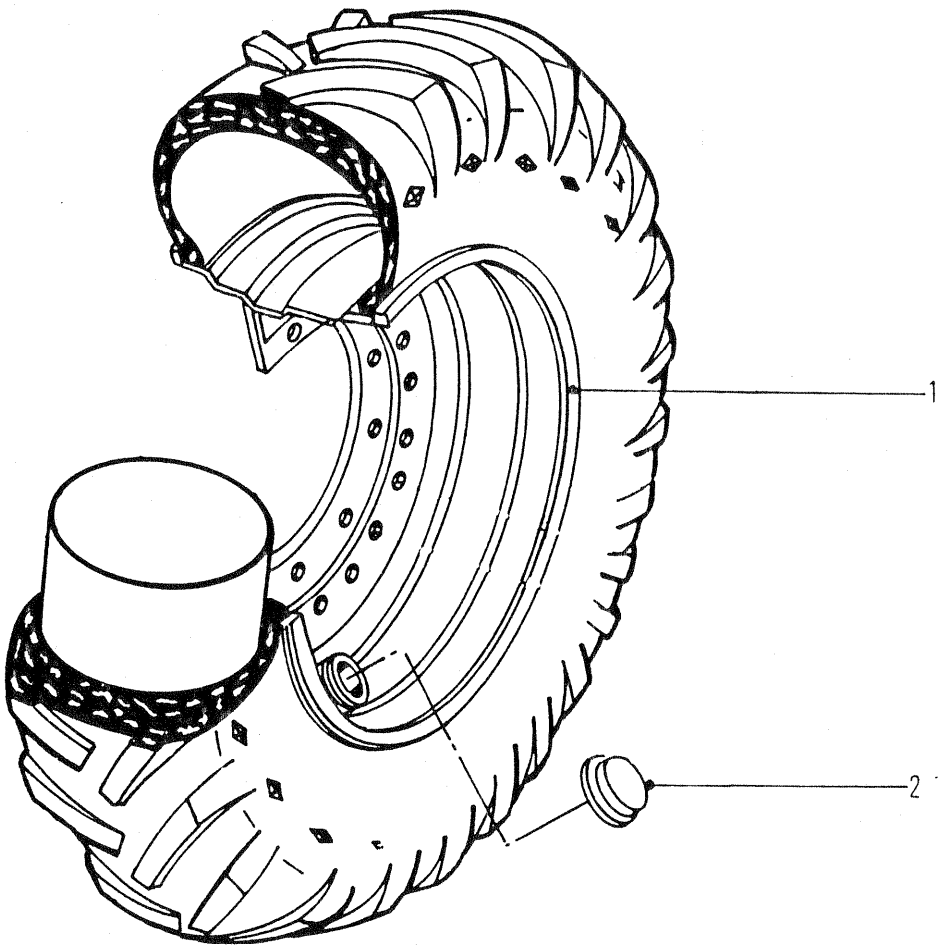


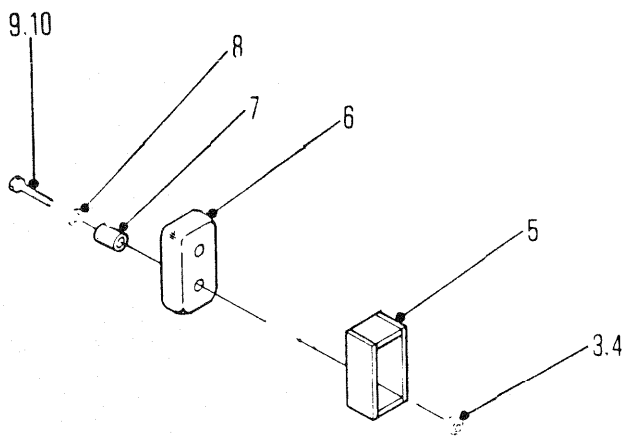


5988TP

# RIM ASSEMBLY - 18.4 X 26 TIRES
# ASSEMBLAGE DE LA JANTE - 18.4 X 26 PNEUMATIQUE
# FELGENEINHEIT - 18.4 X 26 REIFEN
# CONJUNTO DE AROS - 18.4 X 26 PNEUMÁTICO
# CONJUNTO ILANTA - 18.4 X 26 NEUMÁTICO

| No. | Part No. | Qty | Description | Description | Benennung | Descrição | Descripción |
|---|---|---|---|---|---|---|---|
| 1 | [1]1914660 | 4 | Rim | jante | Felgen | aros | llanta |
| 2 | 1914255 | 4 | Cap | chapeau | Kappe | tampa | tapa |
| 3 | 18D000006 | 4 | Nut | écrou | Mutter | porca | tuerca |
| 4 | 17D000003 | 4 | Nut | écrou | Mutter | porca | tuerca |
| 5 | 1901775 | 2 | Stop | butoir | Anschlag | batente | tope |
| 6 | 1907930 | 2 | Steering stop | arrêt de direction | Lenkanschlag | batente da direção | direc-parada |
| 7 | 1907935 | 4 | Spacer | entretoise | Distanzteil | espaçador | espaciador |
| 8 | 551835 | 4 | Washer | rondelle | Scheibe | arruela | arandela |
| 9 | 17C000620 | 4 | Bolt | boulon | Bolzen | parafuso | bulón |
| 10 | 17C000656 | 4 | Bolt | boulon | Bolzen | parafuso | bulón |

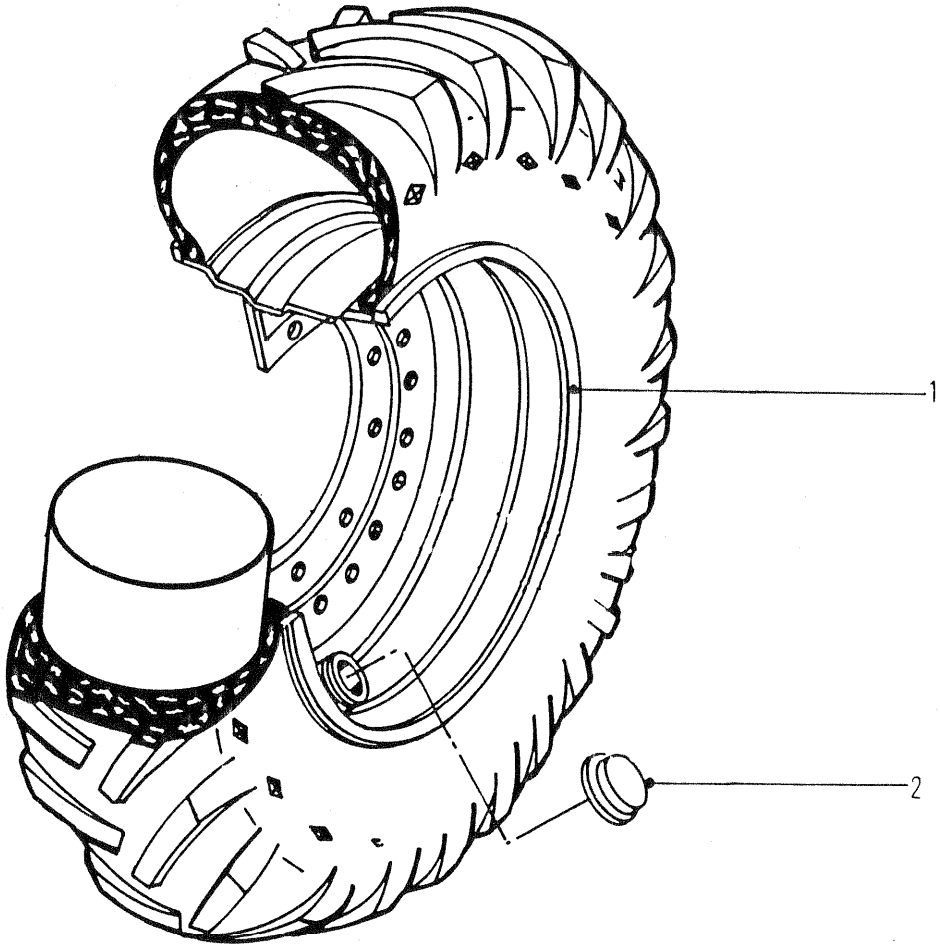


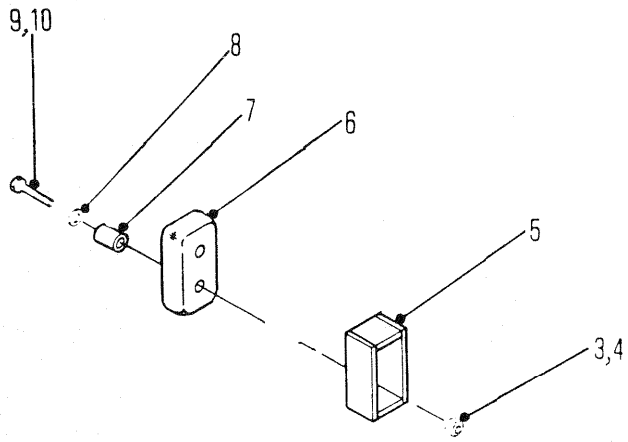


5988TP

# RIM ASSEMBLY - 16.9 X 30 TIRES
# ASSEMBLAGE DE LA JANTE - 16.9 X 30 PNEUMATIQUE
# FELGENEINHEIT - 16.9 X 30 REIFEN
# CONJUNTO DE AROS - 16.9 X 30 PNEUMÁTICO
# CONJUNTO ILANTA - 16.9 X 30 NEUMÁTICO

| No. | Part No. | Qty | Description | Description | Benennung | Descrição | Descripción |
|---|---|---|---|---|---|---|---|
| 1 | [1]1900349 | 4 | Rim | jante | Felgen | aros | llanta |
| 2 | 1914255 | 4 | Cap | chapeau | Kappe | tampa | tapa |
| 3 | 18D000006 | 4 | Nut | écrou | Mutter | porca | tuerca |
| 4 | 17D000003 | 4 | Nut | écrou | Mutter | porca | tuerca |
| 5 | 1901775 | 2 | Stop | butoir | Anschlag | batente | tope |
| 6 | 1907930 | 4 | Steering stop | arrêt de direction | Lenkanschlag | batente da direção | direc-parada |
| 7 | 1907935 | 4 | Spacer | entretoise | Distanzteil | espaçador | espaciador |
| 8 | 551835 | 4 | Washer | rondelle | Scheibe | arruela | arandela |
| 9 | 17C000620 | 4 | Bolt | boulon | Bolzen | parafuso | bulón |
| 10 | 17C000656 | 4 | Bolt | boulon | Bolzen | parafuso | bulón |

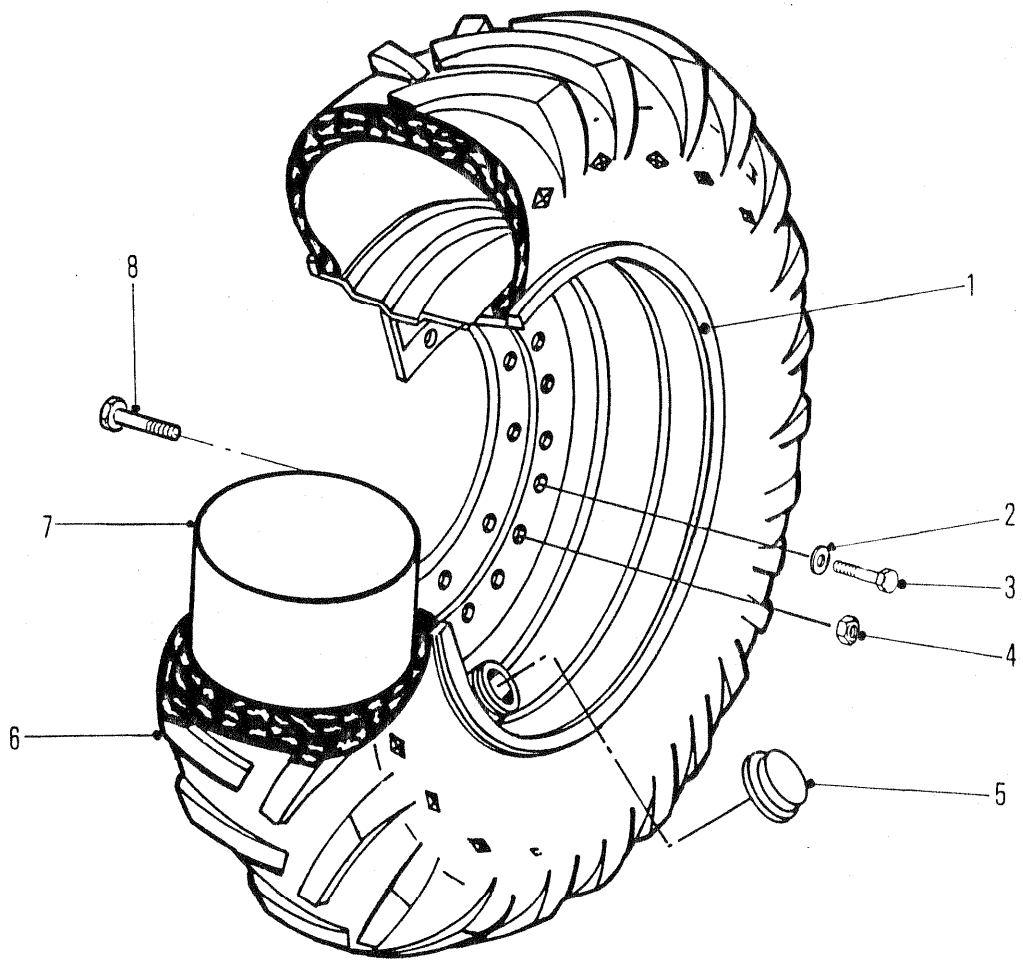


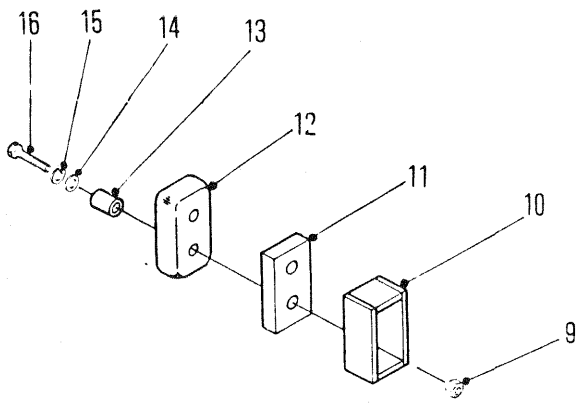


5986TP

# RIM ASSEMBLY - 30.5 X 32 TIRES
# ASSEMBLAGE DE LA JANTE - 30.5 X 32 PNEUMATIQUE
# FELGENEINHEIT - 30.5 X 32 REIFEN
# CONJUNTO DE AROS - 30.5 X 32 PNEUMÁTICO
# CONJUNTO ILANTA - 30.5 X 32 NEUMÁTICO

| No. | Part No. | Qty | Description | Description | Benennung | Descrição | Descripción |
|---|---|---|---|---|---|---|---|
| 1 | [1]1904341 | 4 | Rim | jante | Felgen | aros | llanta |
| 2 | --------- | - | Lockwasher | rondelle frein | Sicherungsscheibe | arruela de pressão | arandela seguridad |
| 3 | --------- | - | Bolt | boulon | Bolzen | parafuso | bulón |
| 4 | --------- | - | Nut | écrou | Mutter | porca | tuerca |
| 5 | 1914255 | 4 | Cap | chapeau | Kappe | tampa | tapa |
| 6 | --------- | - | Tire | pneumatique | Reifen | pneumático | neumático |
| 7 | --------- | - | Tube | tube | Rohr | tubo | tubo |
| 8 | --------- | - | Bolt | boulon | Bolzen | parafuso | bulón |
| 9 | 18D000006 | 4 | Nut | écrou | Mutter | porca | tuerca |
| 10 | 1909062 | 2 | Stop | butoir | Anschlag | batente | tope |
| 11 | --------- | - | Spacer | entretoise | Distanzteil | espaçador | espaciador |
| 12 | 1907930 | 2 | Stop | butoir | Anschlag | batente | tope |
| 13 | 1907935 | 4 | Spacer | entretoise | Distanzteil | espaçador | espaciador |
| 14 | 25E000018 | 4 | Washer | rondelle | Scheibe | arruela | arandela |
| 15 | --------- | - | Lockwasher | rondelle frein | Sicherungsscheibe | arruela de pressão | arandela seguridad |
| 16 | 17C000632 | 4 | Bolt | boulon | Bolzen | parafuso | bulón |

[1] ☐666Cable with 17800 FD & 19600 RD series axle
[1] ☐666Cable avec essieux série 17800 FD & 19600 RD
[1] ☐666 Cable mit Achsen 17800 FD & 19600 RD
[1] ☐666Cable com eixos série 17800 FD & 19600 RD
[1] ☐666Cable con ejex serie 17800 FD & 19600 RD

666CUM 500E-101-CAC→500E-9999-CAC
666GM 513E-101-CAC→513E-9999-CAC
666GMGR 515A-101-CAC→515A-9999-CAC

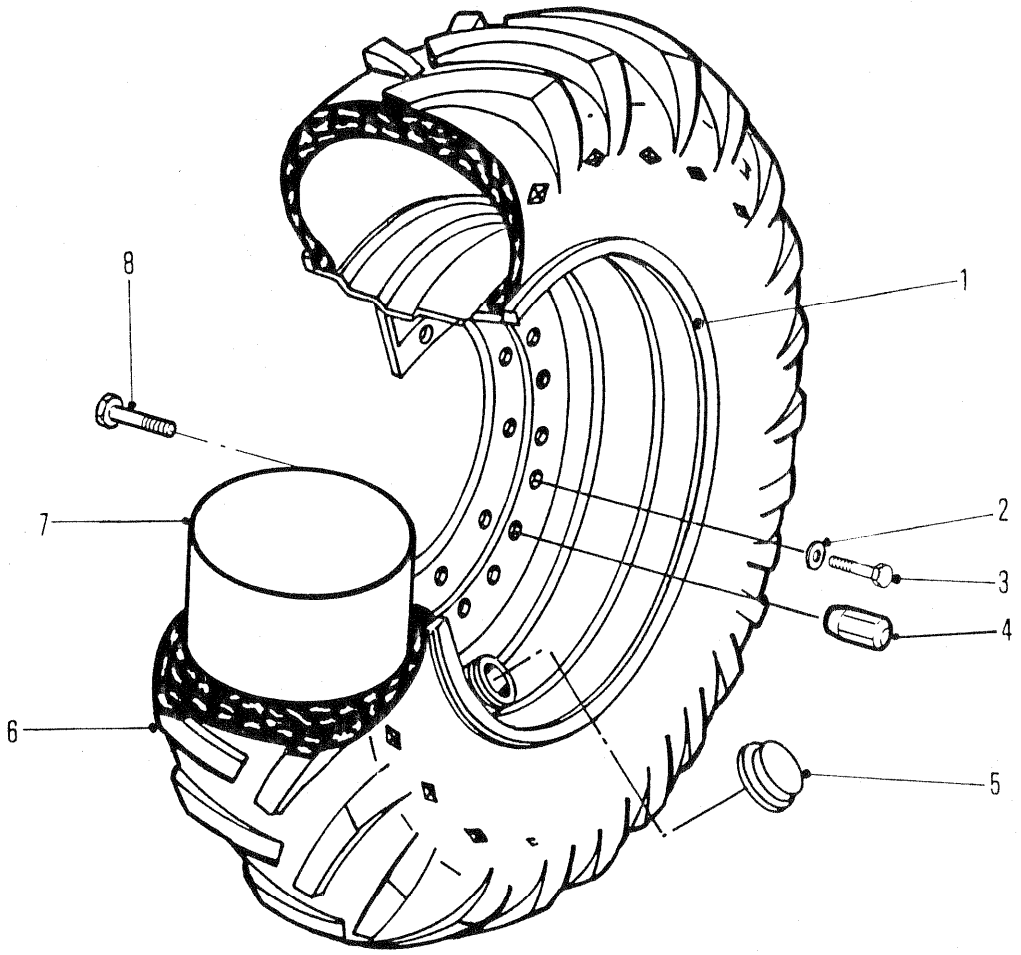


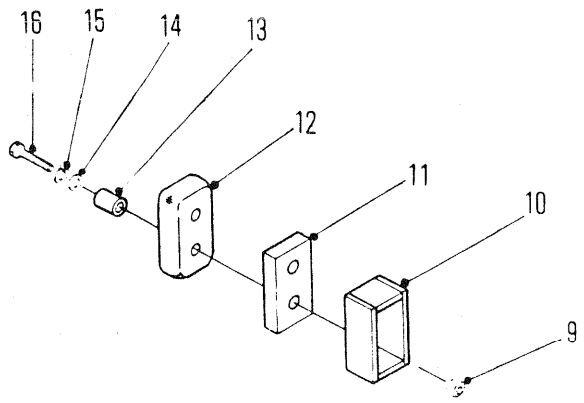


5986TP

# RIM ASSEMBLY - 28.1 X 26 TIRES
# ASSEMBLAGE DE LA JANTE - 28.1 X 26 PNEUMATIQUE
# FELGENEINHEIT - 28.1 X 26 REIFEN
# CONJUNTO DE AROS - 28.1 X 26 PNEUMÁTICO
# CONJUNTO ILANTA - 28.1 X 26 NEUMÁTICO

| No. | Part No. | Qty | Description | Description | Benennung | Descrição | Descripción |
|---|---|---|---|---|---|---|---|
| 1 | **1914666** | 4 | Rim assy | ass de la jante | Felgeneinheit | conj de aros | conj llanta |
| 2 | --------- | - | Lockwasher | rondelle frein | Sicherungsscheibe | arruela de pressão | arandela seguridad |
| 3 | --------- | - | Bolt | boulon | Bolzen | parafuso | bulón |
| 4 | **1900649** | 40 | Wheel nuts | écrous de roue | Radmuttern | porcas da roda | tuerca de rueda |
| 5 | **1909047** | 4 | Cap | chapeau | Kappe | tampa | tapa |
| 6 | --------- | - | Tire | pneumatique | Reifen | pneumático | neumático |
| 7 | --------- | - | Tube | tube | Rohr | tubo | tubo |
| 8 | --------- | - | Bolt | boulon | Bolzen | parafuso | bulón |
| 9 | **18D000006** | 4 | Nut | écrou | Mutter | porca | tuerca |
| 10 | [1]**1901775** | 2 | Stop | butoir | Anschlag | batente | tope |
| 11 | --------- | - | Spacer | entretoise | Distanzteil | espaçador | espaciador |
| 12 | **1907930** | 2 | Stop | butoir | Anschlag | batente | tope |
| 13 | **1907935** | 4 | Spacer | entretoise | Distanzteil | espaçador | espaciador |
| 14 | **25E000018** | 4 | Washer | rondelle | Scheibe | arruela | arandela |
| 15 | --------- | - | Lockwasher | rondelle frein | Sicherungsscheibe | arruela de pressão | arandela seguridad |
| 16 | **17C000632** | 4 | Bolt | boulon | Bolzen | parafuso | bulón |
| 17 | [2]**1928604** | 4 | Rim assy | ass de la jante | Felgeneinheit | conj de aros | conj llanta |
| 18 | [2]**1914255** | 4 | Cap | chapeau | Kappe | tampa | tapa |

666CUM 500E-101-CAC→500G-9999-CAC
666GM 513E-101-CAC→513G-9999-CAC
666GMGR 515A-101-CAC→515A-9999-CAC

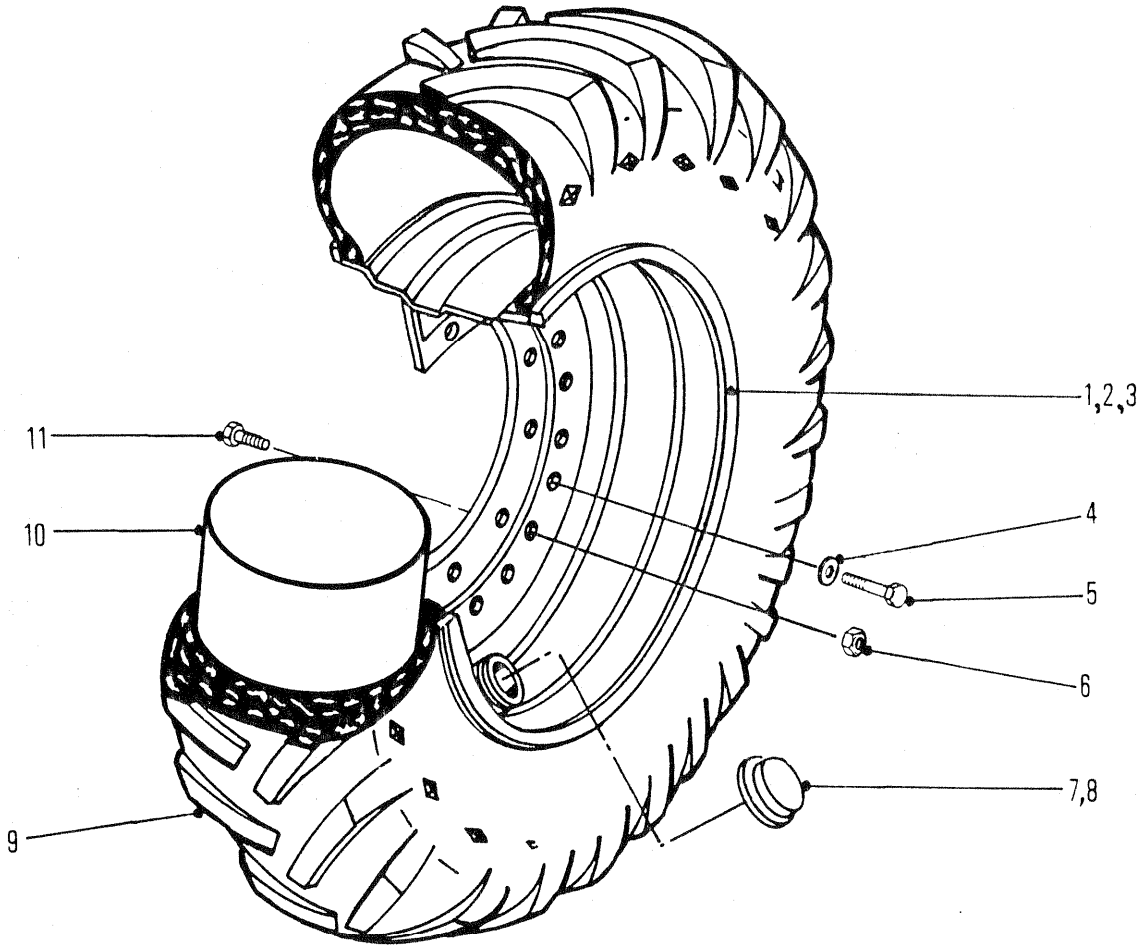


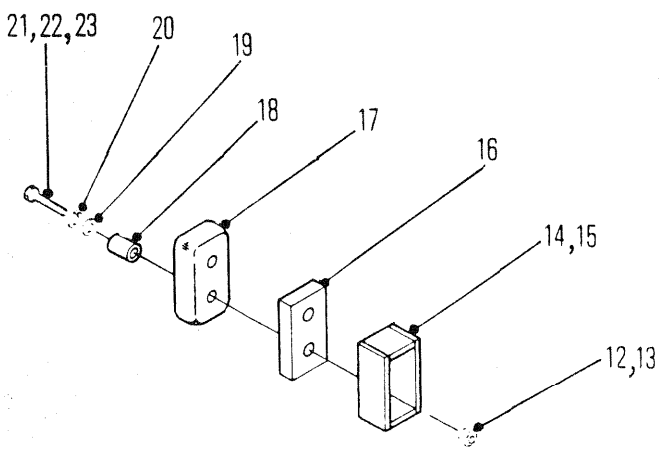


5988TP

# RIM ASSEMBLY - 24.5 X 32 TIRES
# ASSEMBLAGE DE LA JANTE - 24.5 X 32 PNEUMATIQUE
# FELGENEINHEIT - 24.5 X 32 REIFEN
# CONJUNTO DE AROS - 24.5 X 32 PNEUMÁTICO
# CONJUNTO ILANTA - 24.5 X 32 NEUMÁTICO

| No. | Part No. | Qty | Description | Description | Benennung | Descrição | Descripción |
|---|---|---|---|---|---|---|---|
| 1 | [1]1914717 | 4 | Rim | jante | Felgen | aros | llanta |
| 2 | [1]1911977 | 4 | Rim | jante | Felgen | aros | llanta |
| 3 | [2]1908254 | 4 | Rim | jante | Felgen | aros | llanta |
| 4 | [3]23E000016 | 12 | Lockwasher | rondelle frein | Sicherungsscheibe | arruela de pressão | arandela seguridad |
| 5 | [3]17C001624 | 12 | Bolt | boulon | Bolzen | parafuso | bulón |
| 6 | [3]103522 | 40 | Nut | écrou | Mutter | porca | tuerca |
| 7 | 1914255 | 4 | Cap | chapeau | Kappe | tampa | tapa |
| 8 | --- | - | Cap | chapeau | Kappe | tampa | tapa |
| 9 | --- | - | Tire | pneumatique | Reifen | pneumático | neumático |
| 10 | --- | - | Tube | tube | Rohr | tubo | tubo |
| 11 | [3]1991829 | 40 | Bolt | boulon | Bolzen | parafuso | bulón |
| 12 | 18D000006 | 4 | Nut | écrou | Mutter | porca | tuerca |
| 13 | --- | - | Nut | écrou | Mutter | porca | tuerca |
| 14 | [2]1909062 | 2 | Stop | butoir | Anschlag | batente | tope |
| 15 | [1]1901775 | 2 | Stop | butoir | Anschlag | batente | tope |
| 16 | [1]1901771 | 4 | Spacer | entretoise | Distanzteil | espaçador | espaciador |
| 17 | 1907930 | 2 | Stop | butoir | Anschlag | batente | tope |
| 18 | 1907935 | 4 | Spacer | entretoise | Distanzteil | espaçador | espaciador |
| 19 | 25E000018 | 4 | Washer | rondelle | Scheibe | arruela | arandela |
| 20 | --- | - | Lockwasher | rondelle frein | Sicherungsscheibe | arruela de pressão | arandela seguridad |
| 21 | 17C000632 | 4 | Bolt | boulon | Bolzen | parafuso | bulón |
| 22 | --- | - | Bolt | boulon | Bolzen | parafuso | bulón |
| 23 | --- | - | Bolt | boulon | Bolzen | parafuso | bulón |

[1] ☐664Cable with 17800 series axle, 666Cble with 17800 FD & 19600 RD series axles & 664Gr
[1] ☐664Cable avec essieux 17800, 666Cble avec essieux 17800 FD & 19600 RD & 664Gr
[1] ☐664Cable mit Achsen 17800, 666Cble mit Achsen 17800 FD & 19600 RD, & 664Gr
[1] ☐664Cable com eixos 17800, 666Cble com eixos 17800 FD & 19600 RD & 664Gr
[1] ☐664Cable con ejes 17800, 666Cble con ejes 17800 FD & 19600 RD, & 664Gr

[2] ☐ 666Gr

[3] ☐ 1914717

666CUM 500E-101-CAC→500G-9999-CAC
666GM 513E-101-CAC→513G-9999-CAC
666GMGR 515A-101-CAC→515A-9999-CAC

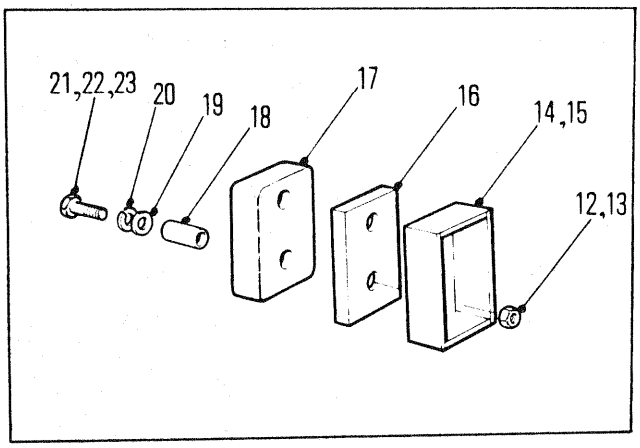


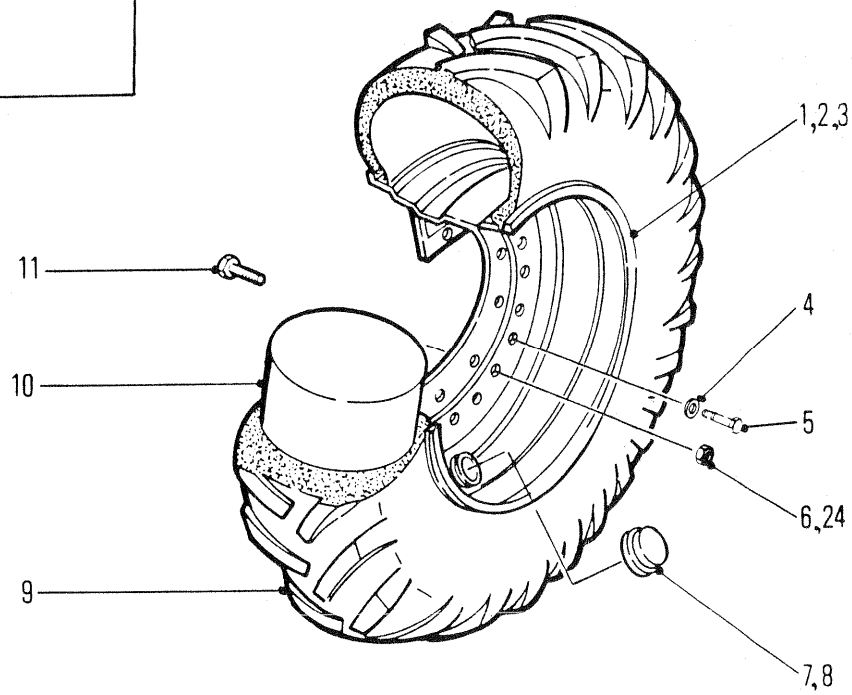


5988TP

# RIM ASSEMBLY - 23.1 X 26 TIRES
# ASSEMBLAGE DE LA JANTE - 23.1 X 26 PNEUMATIQUE
# FELGENEINHEIT - 23.1 X 26 REIFEN
# CONJUNTO DE AROS - 23.1 X 26 PNEUMÁTICO
# CONJUNTO ILANTA - 23.1 X 26 NEUMÁTICO

| No. | Part No. | Qty | Description | Description | Benennung | Descrição | Descripción |
|---|---|---|---|---|---|---|---|
| 1 | [1]1914662 | 4 | Rim | jante | Felgen | aros | llanta |
| 2 | [4]1916648 | 4 | Rim | jante | Felgen | aros | llanta |
| 3 | --------- | - | Rim | jante | Felgen | aros | llanta |
| 4 | [2]23E000008 | 12 | Lockwasher | rondelle frein | Sicherungsscheibe | arruela de pressão | arandela seguridad |
| 5 | [2]17C000816 | 12 | Bolt | boulon | Bolzen | parafuso | bulón |
| 6 | [2]103522 | 40 | Nut | écrou | Mutter | porca | tuerca |
| 7 | [3]1914255 | 4 | Cap | chapeau | Kappe | tampa | tapa |
| 8 | 1909047 | 4 | Cap | chapeau | Kappe | tampa | tapa |
| 9 | --------- | - | Tire | pneumatique | Reifen | pneumático | neumático |
| 10 | --------- | - | Tube | tube | Rohr | tubo | tubo |
| 11 | [2]1991829 | 40 | Bolt | boulon | Bolzen | parafuso | bulón |
| 12 | 17D000003 | 4 | Nut | écrou | Mutter | porca | tuerca |
| 13 | --------- | - | Nut | écrou | Mutter | porca | tuerca |
| 14 | --------- | - | Stop | butoir | Anschlag | batente | tope |
| 15 | --------- | - | Stop | butoir | Anschlag | batente | tope |
| 16 | --------- | - | Spacer | entretoise | Distanzteil | espaçador | espaciador |
| 17 | 1907930 | 2 | Stop | butoir | Anschlag | batente | tope |
| 18 | 1907935 | 4 | Spacer | entretoise | Distanzteil | espaçador | espaciador |
| 19 | 25E000018 | 4 | Washer | rondelle | Scheibe | arruela | arandela |
| 20 | --------- | - | Lockwasher | rondelle frein | Sicherungsscheibe | arruela de pressão | arandela seguridad |
| 21 | 17C000632 | 4 | Bolt | boulon | Bolzen | parafuso | bulón |
| 22 | [3]17C000620 | 4 | Bolt | boulon | Bolzen | parafuso | bulón |
| 23 | --------- | - | Bolt | boulon | Bolzen | parafuso | bulón |

[1] ☐667GR, 664 Cable & 666 GR

[2] ☐ 1916648

[3] ☐ 664GR

[4] ☐664GR & 666 Cable

666CUM 500E-101-CAC→500G-9999-CAC
666GM 513E-101-CAC→513G-9999-CAC
666GMGR 515A-101-CAC→515A-9999-CAC

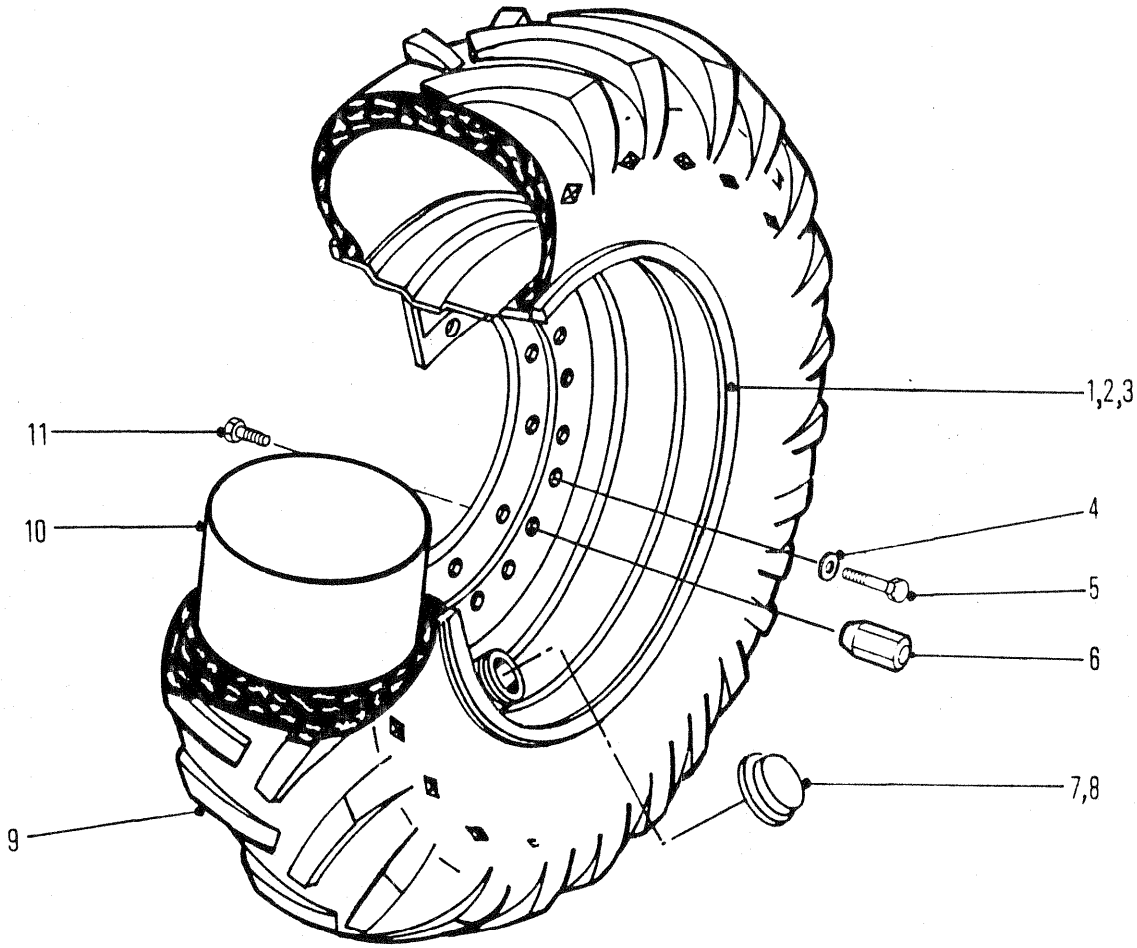


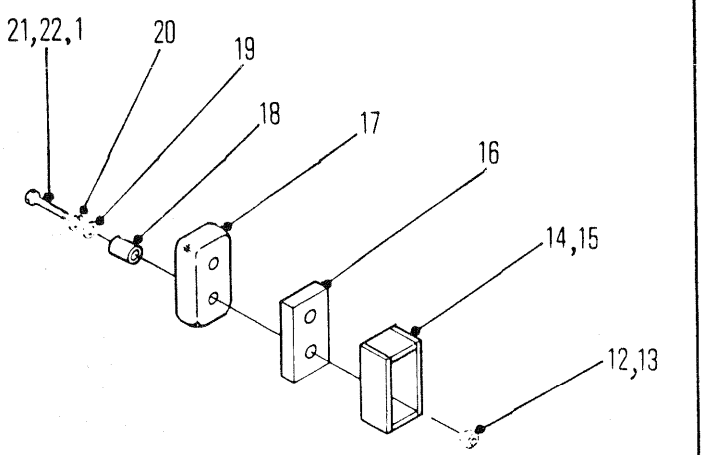


5988TP

# RIM ASSEMBLY - 18.4 X 34 TIRES
# ASSEMBLAGE DE LA JANTE - 18.4 X 34 PNEUMATIQUE
# FELGENEINHEIT - 18.4 X 34 REIFEN
# CONJUNTO DE AROS - 18.4 X 34 PNEUMÁTICO
# CONJUNTO ILANTA - 18.4 X 34 NEUMÁTICO

| No. | Part No. | Qty | Description | Description | Benennung | Descrição | Descripción |
|---|---|---|---|---|---|---|---|
| 1 | **1900350** | 4 | Rim | jante | Felgen | aros | llanta |
| 2 | ------- | - | Bolt | boulon | Bolzen | parafuso | bulón |
| 3 | --------- | - | Rim | jante | Felgen | aros | llanta |
| 4 | --------- | - | Lockwasher | rondelle frein | Sicherungsscheibe | arruela de pressão | arandela seguridad |
| 5 | --------- | - | Bolt | boulon | Bolzen | parafuso | bulón |
| 6 | **1900649** | 40 | Nut | écrou | Mutter | porca | tuerca |
| 7 | **1914255** | 4 | Cap | chapeau | Kappe | tampa | tapa |
| 8 | --------- | - | Cap | chapeau | Kappe | tampa | tapa |
| 9 | --------- | - | Tire | pneumatique | Reifen | pneumático | neumático |
| 10 | --------- | - | Tube | tube | Rohr | tubo | tubo |
| 11 | --------- | 40 | Bolt | boulon | Bolzen | parafuso | bulón |
| 12 | **17D000003** | 4 | Nut | écrou | Mutter | porca | tuerca |
| 13 | --------- | - | Nut | écrou | Mutter | porca | tuerca |
| 14 | --------- | - | Stop | butoir | Anschlag | batente | tope |
| 15 | --------- | 2 | Stop | butoir | Anschlag | batente | tope |
| 16 | --------- | - | Spacer | entretoise | Distanzteil | espaçador | espaciador |
| 17 | **1907930** | 2 | Stop | butoir | Anschlag | batente | tope |
| 18 | **1907935** | 4 | Spacer | entretoise | Distanzteil | espaçador | espaciador |
| 19 | **25E000018** | 4 | Washer | rondelle | Scheibe | arruela | arandela |
| 20 | --------- | - | Lockwasher | rondelle frein | Sicherungsscheibe | arruela de pressão | arandela seguridad |
| 21 | **17C000632** | 4 | Bolt | boulon | Bolzen | parafuso | bulón |
| 22 | **17C000620** | 4 | Bolt | boulon | Bolzen | parafuso | bulón |

666CUM 500E-101-CAC→500G-9999-CAC
666GM 513E-101-CAC→513G-9999-CAC

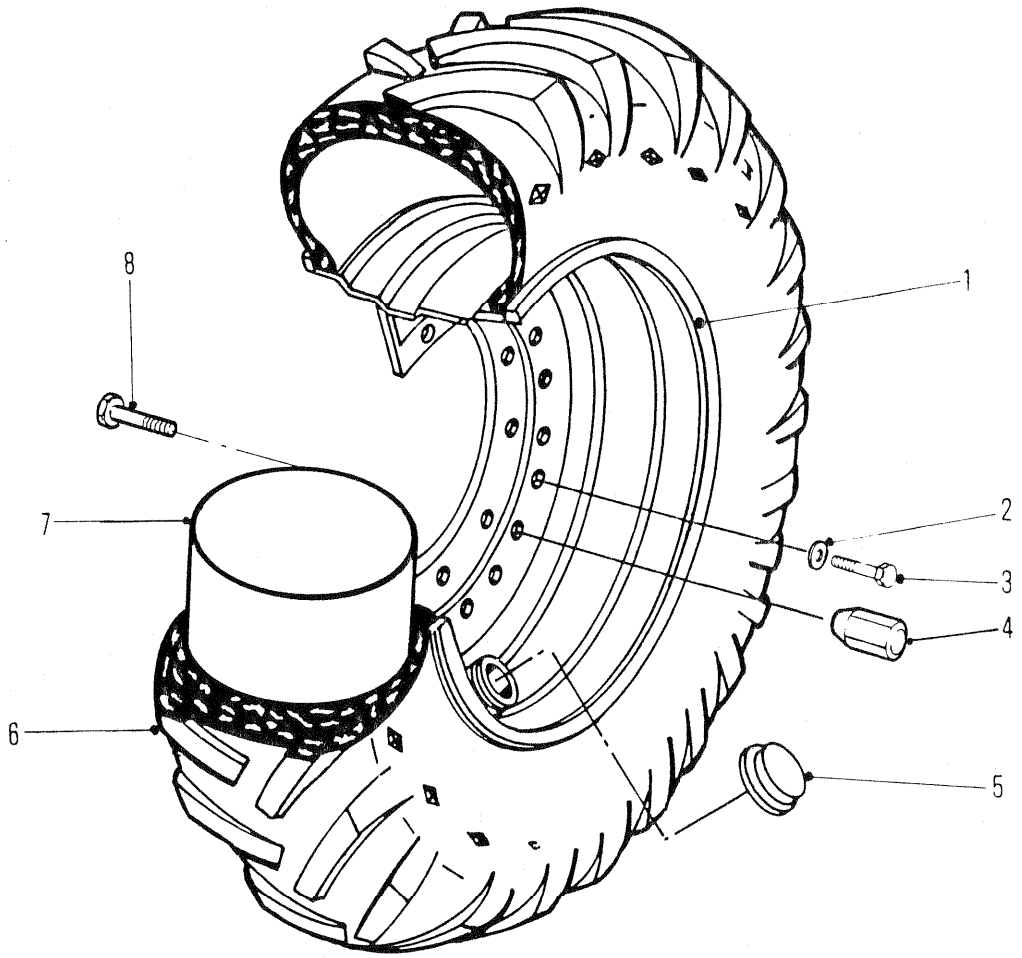


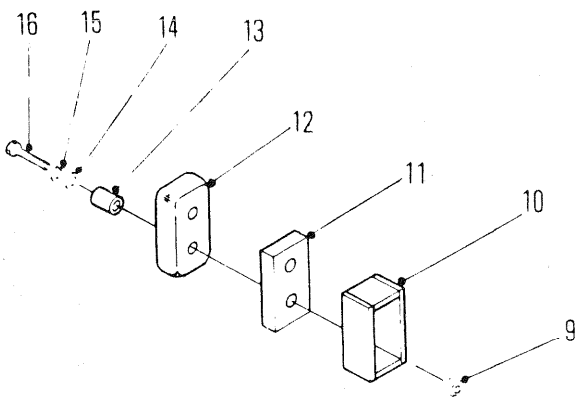


5986TP

# RIM ASSEMBLY - 18.4 X 26 TIRES
# ASSEMBLAGE DE LA JANTE - 18.4 X 26 PNEUMATIQUE
# FELGENEINHEIT - 18.4 X 26 REIFEN
# CONJUNTO DE AROS - 18.4 X 26 PNEUMÁTICO
# CONJUNTO ILANTA - 18.4 X 26 NEUMÁTICO

| No. | Part No. | Qty | Description | Description | Benennung | Descrição | Descripción |
|---|---|---|---|---|---|---|---|
| 1 | [1]1914660 | 4 | Rim | jante | Felgen | aros | llanta |
| 2 | --------- | - | Lockwasher | rondelle frein | Sicherungsscheibe | arruela de pressão | arandela seguridad |
| 3 | --------- | - | Bolt | boulon | Bolzen | parafuso | bulón |
| 4 | 1900649 | 40 | Nut | écrou | Mutter | porca | tuerca |
| 5 | 1914255 | 4 | Cap | chapeau | Kappe | tampa | tapa |
| 6 | --------- | - | Tire | pneumatique | Reifen | pneumático | neumático |
| 7 | --------- | - | Tube | tube | Rohr | tubo | tubo |
| 8 | --------- | - | Bolt | boulon | Bolzen | parafuso | bulón |
| 9 | 17D000003 | 4 | Nut | écrou | Mutter | porca | tuerca |
| 10 | --------- | 2 | Stop | butoir | Anschlag | batente | tope |
| 11 | --------- | - | Spacer | entretoise | Distanzteil | espaçador | espaciador |
| 12 | 1907930 | 2 | Stop | butoir | Anschlag | batente | tope |
| 13 | 1907935 | 4 | Spacer | entretoise | Distanzteil | espaçador | espaciador |
| 14 | 25E000018 | 4 | Washer | rondelle | Scheibe | arruela | arandela |
| 15 | --------- | - | Lockwasher | rondelle frein | Sicherungsscheibe | arruela de pressão | arandela seguridad |
| 16 | 17C000632 | 4 | Bolt | boulon | Bolzen | parafuso | bulón |

[1] ☐666 machines equipped with FD & RD 17800 series axle & 664 machines equipped with FD & RD 17600 series axle
[1] ☐engins 666 éaquipés dessieux séries 17800 FD & RD & engins 664 éaquipés dessieux séries 17600 FD & RD
[1] ☐Maschinen 666 mit Achsen, Serien 17800 FD & RD & Maschinen 664 mit Achsen, Serien 17600 FD & RD
[1] ☐Maquinas 666 equipadas com eixos da sárie 17800 FD & RD & Maquinas 664 equipadas com eixos da sárie 17600 FD & RD
[1] ☐Aparatos 666 provistas de ejes serie 17800 FD & RD & Aparatos 666 provistas de ejes serie 17800 FD & RD

666CUM 500E-101-CAC→500G-9999-CAC
666GM 513E-101-CAC→513G-9999-CAC

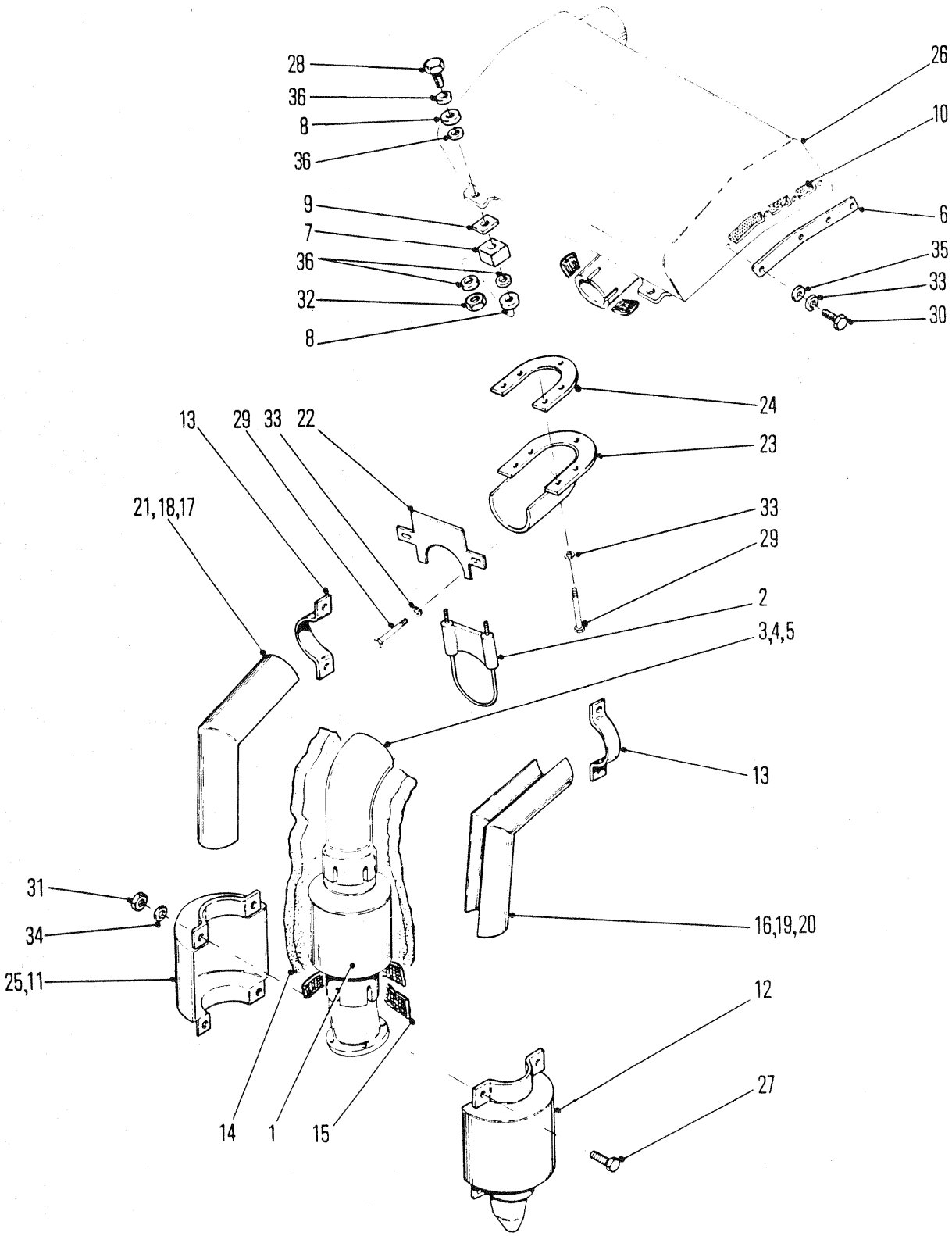
28
36
8
36
9
7
36
32
8
26
10
6
35
33
30
24
23
13
29
33
22
21,18,17
33
29
2
3,4,5
13
31
34
25,11
16,19,20
12
27
14
1
15
5781TP

## INSULATION-MUFFLER ⊠
## ISOLATION-POTD'ÉCHAPPEMENT ⊠
## ISOLIERUNG-SCHALLDÄMPFER ⊠
## INSULAÇÃO-SILENCIADOR ⊠
## AISLAMIENTO-SILENCIADOR ⊠

| No. | Part No. | Qty | Description | Description | Benennung | Descrição | Descripción |
|---|---|---|---|---|---|---|---|
| 1 | **1902490** | 1 | Spark arrestor | pare-étincelles | Funkenfnger | para-faiscas | apagachispa |
| 2 | **1902848** | 1 | Clamp | pince | Schelle | braçadeira | abrazadera |
| 3 | [2]**1906455** | 1 | Exhaust pipe | tuyau déchappement | Auspuffrohr | cano de descarga | cao de escape· |
| 4 | [3]**1906456** | 1 | Exhaust pipe | tuyau déchappement | Auspuffrohr | cano de descarga | cao de escape |
| 5 | [4]**1907996** | 1 | Exhaust pipe | tuyau déchappement | Auspuffrohr | cano de descarga | cao de escape |
| 6 | **1908730** | 1 | End plate | plaque dextrémité | Endplatte | placa terminal | placa extrema |
| 7 | **1908768** | 4 | Grommet | oeillet | Augenring | ilhó | arandela pasacable |
| 8 | **1908769** | 8 | Grommet | oeillet | Augenring | ilhó | arandela pasacable |
| 9 | **1908770** | 4 | Spacer | entretoise | Distanzteil | espaçador | espaciador |
| 10 | ‡**1908773** | - | Insulation | isolation | Isolierung | isolamento | aislación |
| 11 | [6]†**1909256** | 1 | Cover | couvercle | Deckel | tampa | tapa |
| 12 | **1909257** | 1 | Cover | couvercle | Deckel | tampa | tapa |
| 13 | **1909260** | 2 | Clamp | pince | Schelle | braçadeira | abrazadera |
| 14 | **1909264** | 1 | Insulation | isolation | Isolierung | isolamento | aislación |
| 15 | ‡**1909266** | - | Tape | ruban | Band | fita | cinta |
| 16 | [4]**1915022** | 1 | Guard | protecteur | Schutz | proteção | protector |
| 17 | [4]**1915023** | 1 | Guard | protecteur | Schutz | proteção | protector |
| 18 | [2]**1915027** | 1 | Guard | protecteur | Schutz | proteção | protector |
| 19 | [2]**1915028** | 1 | Guard | protecteur | Schutz | proteção | protector |
| 20 | [3]**1915029** | 1 | Guard | protecteur | Schutz | proteção | protector |
| 21 | [3]**1915030** | 1 | Guard | protecteur | Schutz | proteção | protector |
| 22 | **1915078** | 1 | Cover | couvercle | Deckel | tampa | tapa |
| 23 | **1915079** | 1 | Cover | couvercle | Deckel | tampa | tapa |
| 24 | ‡**1915082** | - | Shim | cale | Beilage | calço | planchita |
| 25 | [5]**1915102** | 1 | Cover | couvercle | Deckel | tampa | tapa |
| 26 | [1]**1991017** | 1 | Muffler kit | jeu silencieux | Auspufftopfsatz | jogo silenciador | juego silenciador |
| 27 | **17C000408** | 7 | Bolt | boulon | Bolzen | parafuso | bulón |
| 28 | **17C000614** | 4 | Bolt | boulon | Bolzen | parafuso | bulón |
| 29 | **17C000616** | 6 | Bolt | boulon | Bolzen | parafuso | bulón |
| 30 | **17C000848** | 4 | Bolt | boulon | Bolzen | parafuso | bulón |
| 31 | **17D000003** | 6 | Nut | écrou | Mutter | porca | tuerca |
| 32 | **17D000006** | 4 | Nut | écrou | Mutter | porca | tuerca |
| 33 | **24E000004** | 11 | Lockwasher | rondelle frein | Sicherungsscheibe | arruela de pressão | arandela seguridad |
| 34 | **25E000006** | 6 | Lockwasher | rondelle frein | Sicherungsscheibe | arruela de pressão | arandela seguridad |
| 35 | **25E000013** | 4 | Flatwasher | rondelle plate | Unterlegscheibe | arruela chata | arandela plana |
| 36 | **25E000021** | 16 | Flatwasher | rondelle plate | Unterlegscheibe | arruela chata | arandela plana |

[1] Inc 6, 10, 30, 33 & 35

[2] 664GM

[3] 666GM

[4] 666CUM

[5] CUM

[6] GM

666CUM 500E-101-CAC→500E-9999-CAC
666GM 513E-101-CAC→513E-9999-CAC

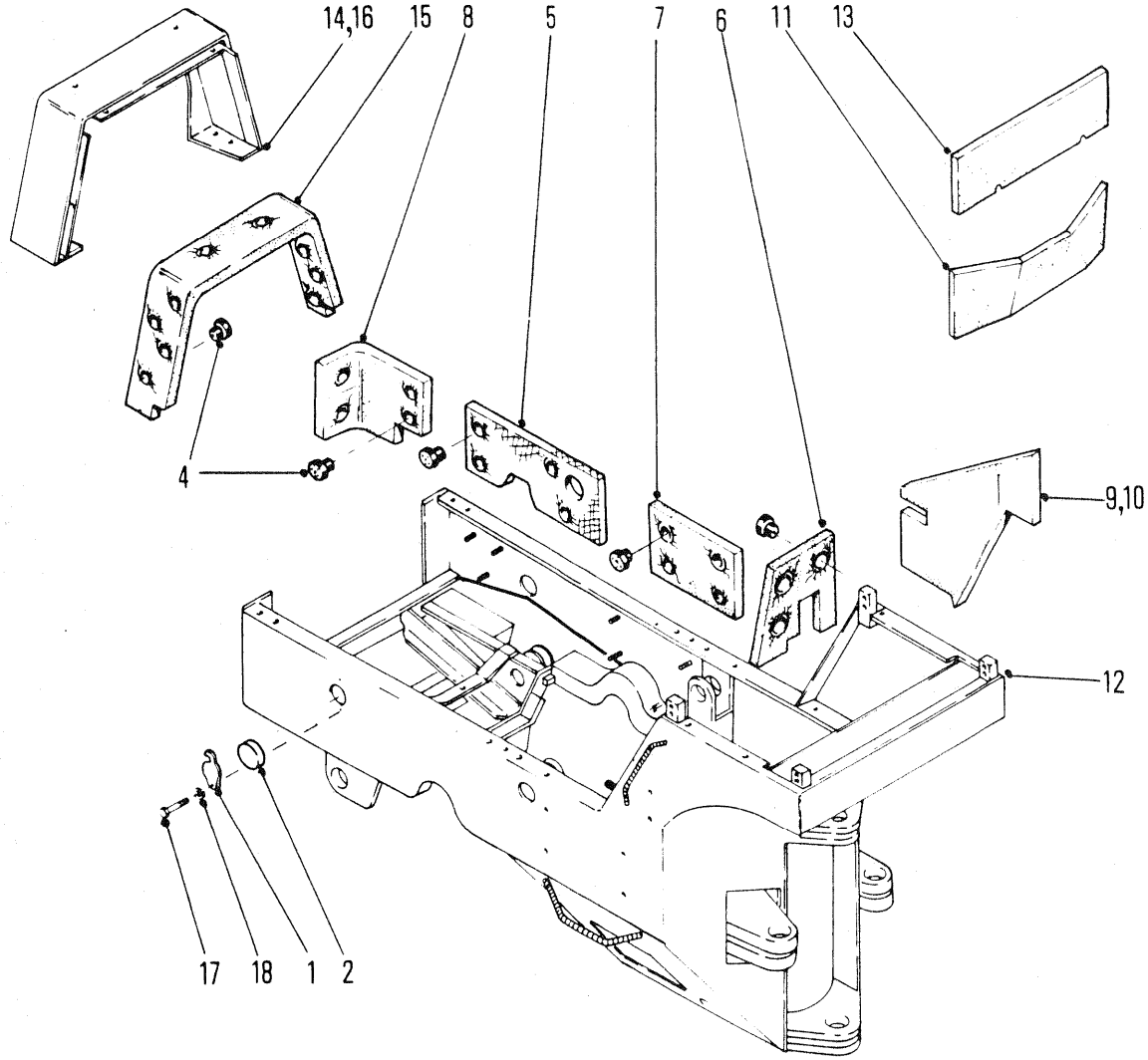


5786TP

# INSULATION-FRONT FRAME
# ISOLATION-CHÂSSIS AVANT
# ISOLIERUNG-VORDERRAHMEN
# ISOLAÇÃO-CHASSI DIANTEIRO
# AISLAMIENTTO-BASTIDOR DELANTERO

| No. | Part No. | Qty | Description | Description | Benennung | Descrição | Descripción |
|---|---|---|---|---|---|---|---|
| 1 | **1909212** | 4 | Cover | couvercle | Deckel | tampa | tapa |
| 2 | **1909213** | 4 | Insulation | isolation | Isolierung | isolamento | aislación |
| 3 | ‡†**1913913** | - | Adhesive | Adhésif | Klebstoff | adesivo | Adhesivo |
| 4 | **1914284** | 37 | Fastener | attache | Verschlu- | prendedor | abrazadera |
| 5 | **1914877** | 2 | Insulation | isolation | Isolierung | isolamento | aislación |
| 6 | **1914880** | 2 | Insulation | isolation | Isolierung | isolamento | aislación |
| 7 | **1914882** | 1 | Insulation | isolation | Isolierung | isolamento | aislación |
| 8 | **1914884** | 2 | Insulation | isolation | Isolierung | isolamento | aislación |
| 9 | **1914886** | 1 | Insulation RH | isolation CD | Isolierung R | isolamento LD | aislación LD |
| 10 | **1914887** | 1 | Insulation LH | isolation CG | Isolierung L | isolamento LE | aislación LI |
| 11 | **1914888** | 1 | Insulation | isolation | Isolierung | isolamento | aislación |
| 12 | ○------- | 1 | Frame front | chassis avant | Vorderahmen | chassi dianteiro | bastidor delantero |
| 13 | **1914891** | 1 | Insulation | isolation | Isolierung | isolamento | aislación |
| 14 | **1915005** | 1 | Shroud | enveloppe | Umkleidung | proteção | envolvente |
| 15 | **1915006** | 1 | Insulation | isolation | Isolierung | isolamento | aislación |
| 16 | **1915009** | 1 | Shroud | enveloppe | Umkleidung | proteção | envolvente |
| 17 | **17C000614** | 8 | Bolt | boulon | Bolzen | parafuso | bulón |
| 18 | **24E000006** | 8 | Lockwasher | rondelle frein | Sicherungsscheibe | arruela de pressão | arandela seguridad |

666CUM 500E-101-CAC→500E-9999-CAC
666GM 513E-101-CAC→513E-9999-CAC

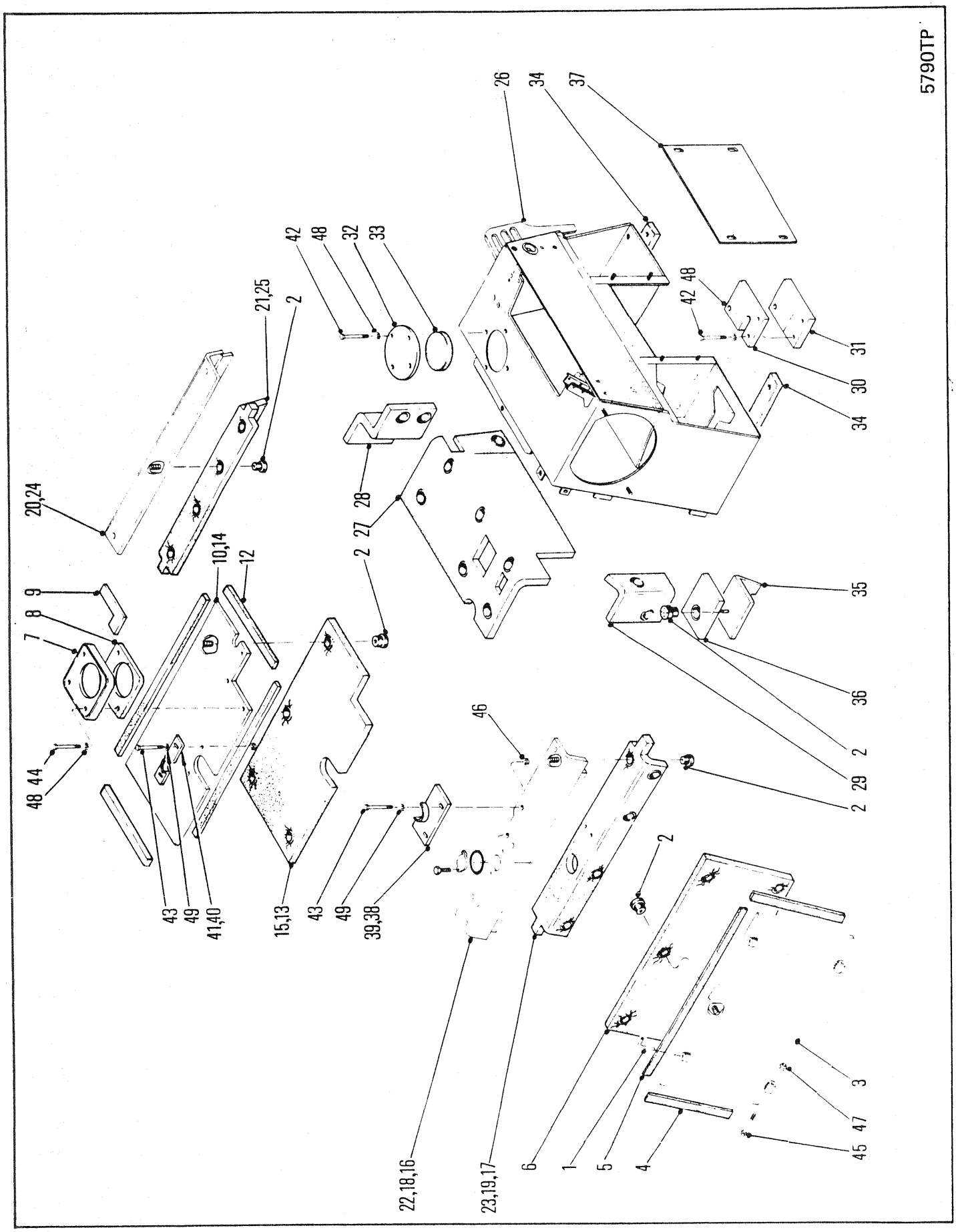
5790TP
26
34
37
42
48
32
33
21,25
2
42
48
31
30
34
20,24
28
27
2
10,14
12
9
8
7
35
36
2
29
2
46
48
44
2
43
49
41,40
15,13
43
49
39,38
22,18,16
23,19,17
6
1
5
4
2
3
47
45

# INSULATION-FIREWALL
# ISOLATION-PAROI ANTI-INCENDIE
# ISOLIERUNG-STIRNWAND-BRANDSCHOTT
# INSULAÇÃO-PAREDE GUARDAFOGO
# AISLAMIENTO-PARED CONTRA FUEGO

| No. | Part No. | Qty | Description | Description | Benennung | Descrição | Descripción |
|---|---|---|---|---|---|---|---|
| 1 | **1914040** | 4 | Pin | goupille | Stift | pino | pasador |
| 2 | **1914284** | 55 | Fastener | attache | Verschlu- | prendedor | abrazadera |
| 3 | **1914984** | 2 | Side panel | panneau latéral | Seitenblech | painel lateral | panel lateral |
| 4 | **1914986** | 4 | Gasket | garniture | Dichtung | gaxeta | empaquetadura |
| 5 | **1914987** | 2 | Gasket | garniture | Dichtung | gaxeta | empaquetadura |
| 6 | **1914988** | 2 | Insulation | isolation | Isolierung | isolamento | aislación |
| 7 | [1]**1914991** | 1 | Cover | couvercle | Deckel | tampa | tapa |
| 8 | [1]**1914994** | 1 | Insulation | isolation | Isolierung | isolamento | aislación |
| 9 | [1]**1914995** | 1 | Flat | méplat | Fläche | bloco plano | planchuela |
| 10 | [2]**1915011** | 1 | Top panel | panneau supérieur | Deckplatte | painel superior | panel superior |
| 11 | **1915012** | 2 | Gasket | garniture | Dichtung | gaxeta | empaquetadura |
| 12 | **1915013** | 2 | Gasket | garniture | Dichtung | gaxeta | empaquetadura |
| 13 | [2]**1915014** | 1 | Insulation | isolation | Isolierung | isolamento | aislación |
| 14 | [1]**1915017** | 1 | Top panel | panneau supérieur | Deckplatte | painel superior | panel superior |
| 15 | [1]**1915018** | 1 | Insulation | isolation | Isolierung | isolamento | aislación |
| 16 | [3]**1915033** | 1 | Side rail | rail du côté | Seitingeländer | trilho lateral | riel lateral |
| 17 | [3]**1915035** | 1 | Insulation | isolation | Isolierung | isolamento | aislación |
| 18 | [4]**1915037** | 1 | Side rail | rail du côté | Seitingeländer | trilho lateral | riel lateral |
| 19 | [4]**1915039** | 1 | Insulation | isolation | Isolierung | isolamento | aislación |
| 20 | [2]**1915042** | 1 | Side rail | rail du côté | Seitingeländer | trilho lateral | riel lateral |
| 21 | [2]**1915044** | 1 | Insulation RH | isolation CD | Isolierung R | isolamento LD | aislación LD |
| 22 | [5]**1915046** | 1 | Side rail | rail du côté | Seitingeländer | trilho lateral | riel lateral |
| 23 | [5]**1915047** | 1 | Insulation | isolation | Isolierung | isolamento | aislación |
| 24 | [1]**1915050** | 1 | Side rail | rail du côté | Seitingeländer | trilho lateral | riel lateral |
| 25 | [1]**1915051** | 1 | Insulation RH | isolation CD | Isolierung R | isolamento LD | aislación LD |
| 26 | **1915054** | 1 | Firewall assy | ass du pare-feu | Brandschotteinheit | cj parede refrat | conj pared cotrfg |
| 27 | **1915055** | 1 | Insulation | isolation | Isolierung | isolamento | aislación |
| 28 | **1915057** | 1 | Insulation | isolation | Isolierung | isolamento | aislación |
| 29 | **1915059** | 1 | Insulation | isolation | Isolierung | isolamento | aislación |
| 30 | **1915061** | 1 | Retainer | arrêtoir | Halterung | retentor | retén |
| 31 | **1915062** | 1 | Gasket | garniture | Dichtung | gaxeta | empaquetadura |
| 32 | **1915064** | 1 | Cover | couvercle | Deckel | tampa | tapa |
| 33 | **1915065** | 1 | Insulation | isolation | Isolierung | isolamento | aislación |
| 34 | **1915066** | 2 | Gasket | garniture | Dichtung | gaxeta | empaquetadura |
| 35 | **1915070** | 1 | Cover LH | couvercle G | Deckel R | capa LE | cubierta LI |
| 36 | **1915072** | 1 | Insulation | isolation | Isolierung | isolamento | aislación |
| 37 | **1915076** | 1 | Panel | panneau | Tafel | painel | panel |
| 38 | [3]**1915200** | 1 | Cover LH | couvercle G | Deckel R | capa LE | cubierta LI |
| 39 | [4]**1915203** | 1 | Cover LH | couvercle G | Deckel R | capa LE | cubierta LI |
| 40 | [4]**1915236** | 1 | Cover RH | couvercle D | Deckel R | tampa LD | cubierta LD |
| 41 | [3]**1915245** | 1 | Cover RH | couvercle D | Deckel R | tampa LD | cubierta LD |
| 42 | **17C000412** | 4 | Bolt | boulon | Bolzen | parafuso | bulón |
| 43 | **17C000416** | 2 | Bolt | boulon | Bolzen | parafuso | bulón |
| 44 | **17C000420** | 3 | Bolt | boulon | Bolzen | parafuso | bulón |
| 45 | **17C010104** | 4 | Bolt | boulon | Bolzen | parafuso | bulón |
| 46 | **17D000001** | 3 | Locknut | contre-écrou | Gegenmutter | contra porca | contratuerca |
| 47 | **17D000009** | 4 | Nut | écrou | Mutter | porca | tuerca |
| 48 | **24E000004** | 9 | Lockwasher | rondelle frein | Sicherungsscheibe | arruela de pressão | arandela seguridad |
| 49 | **25E000016** | 2 | Flatwasher | rondelle plate | Unterlegscheibe | arruela chata | arandela plana |
| 50 | †**1923914** | 1 | Insulation | isolation | Isolierung | isolamento | aislación |
| 51 | †**1914284** | 5 | Fastener | attache | Verschlu- | prendedor | abrazadera |

[1] CUM

[2] GM

[3] 666 GM

[4] 664 GM

[5] 666 CUM

666CUM 500E-101-CAC➡500E-9999-CAC
666GM 513E-101-CAC➡513E-9999-CAC

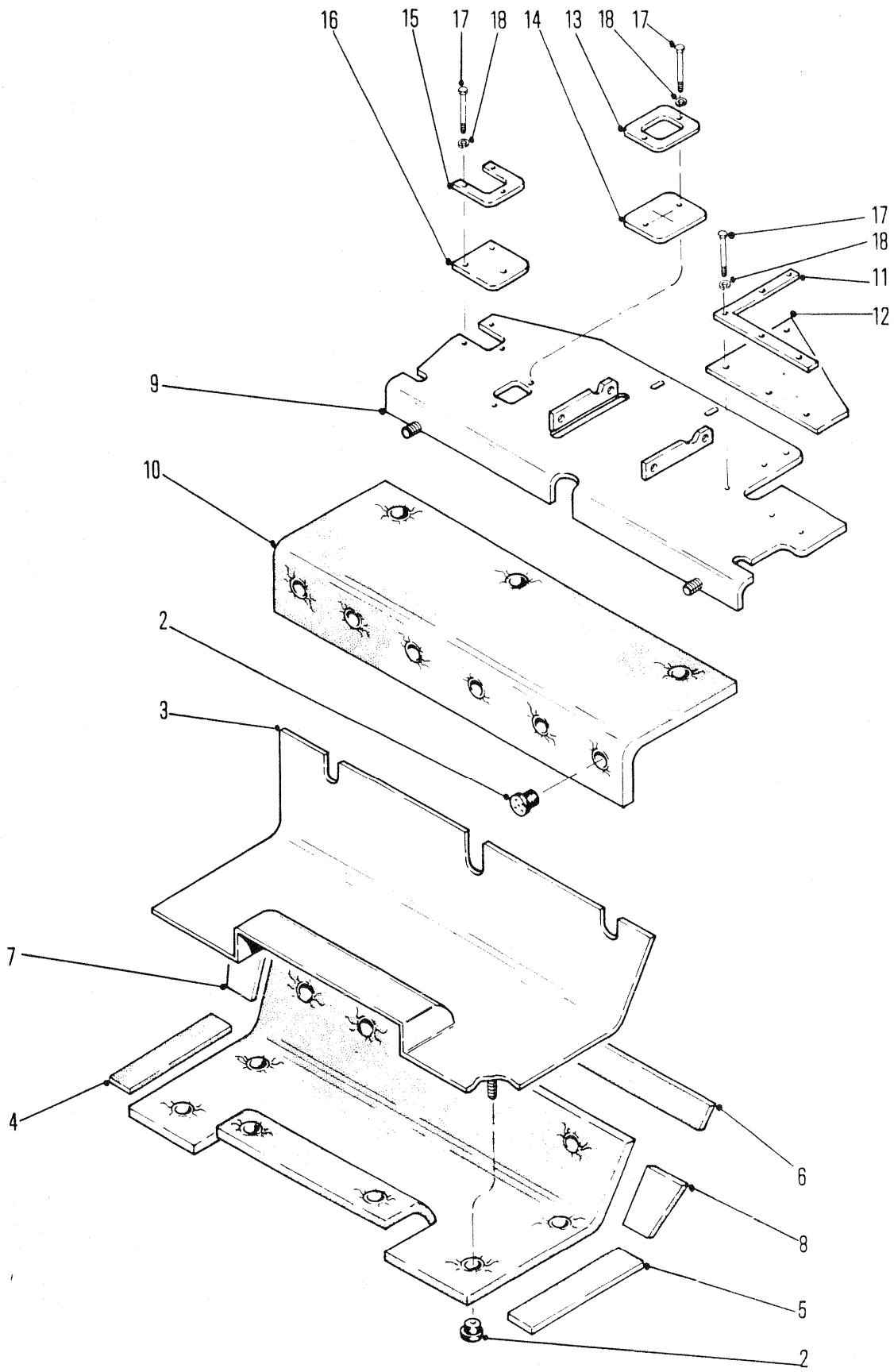
16
15
17
18
14
13
18
17
17
18
11
12
9
10
2
3
7
4
6
8
5
2
5794TP

## INSULATION-FLOOR & SEAT
## ISOLATION-PLANCHER ET SIÈGE
## ISOLIERUNG-BODEN UND SITZ
## INSULAÇÃO-TAPETE DO PISO E ASSENTO
## AISLAMIENTO-PISO Y ASIENTO

| No. | Part No. | Qty | Description | Description | Benennung | Descrição | Descripción |
|---|---|---|---|---|---|---|---|
| 1 | ‡†1913913 | - | Adhesive | Adhésif | Klebstoff | adesivo | Adhesivo |
| 2 | 1914284 | 21 | Fastener | attache | Verschlu- | prendedor | abrazadera |
| 3 | 1914976 | 1 | Plate | plaque | Platte | placa | placa |
| 4 | 1914977 | 1 | Insulation | isolation | Isolierung | isolamento | aislación |
| 5 | 1914979 | 2 | Gasket | garniture | Dichtung | gaxeta | empaquetadura |
| 6 | 1914980 | 1 | Gasket | garniture | Dichtung | gaxeta | empaquetadura |
| 7 | 1914981 | 1 | Gasket | garniture | Dichtung | gaxeta | empaquetadura |
| 8 | 1914982 | 1 | Gasket | garniture | Dichtung | gaxeta | empaquetadura |
| 9 | 1914997 | 1 | Plate | plaque | Platte | placa | placa |
| 10 | 1914998 | 1 | Insulation | isolation | Isolierung | isolamento | aislación |
| 11 | 1915000 | 1 | Retainer | arrêtoir | Halterung | retentor | retén |
| 12 | 1915001 | 1 | Gasket | garniture | Dichtung | gaxeta | empaquetadura |
| 13 | 1915002 | 1 | Retainer | arrêtoir | Halterung | retentor | retén |
| 14 | 1915003 | 1 | Gasket | garniture | Dichtung | gaxeta | empaquetadura |
| 15 | 1915176 | 1 | Retainer | arrêtoir | Halterung | retentor | retén |
| 16 | 1915177 | 1 | Gasket | garniture | Dichtung | gaxeta | empaquetadura |
| 17 | 18C000410 | 7 | Bolt | boulon | Bolzen | parafuso | bulón |
| 18 | 24E000004 | 7 | Lockwasher | rondelle frein | Sicherungsscheibe | arruela de pressão | arandela seguridad |

666CUM 500E-101-CAC→500E-9999-CAC
666GM 513E-101-CAC→513E-9999-CAC

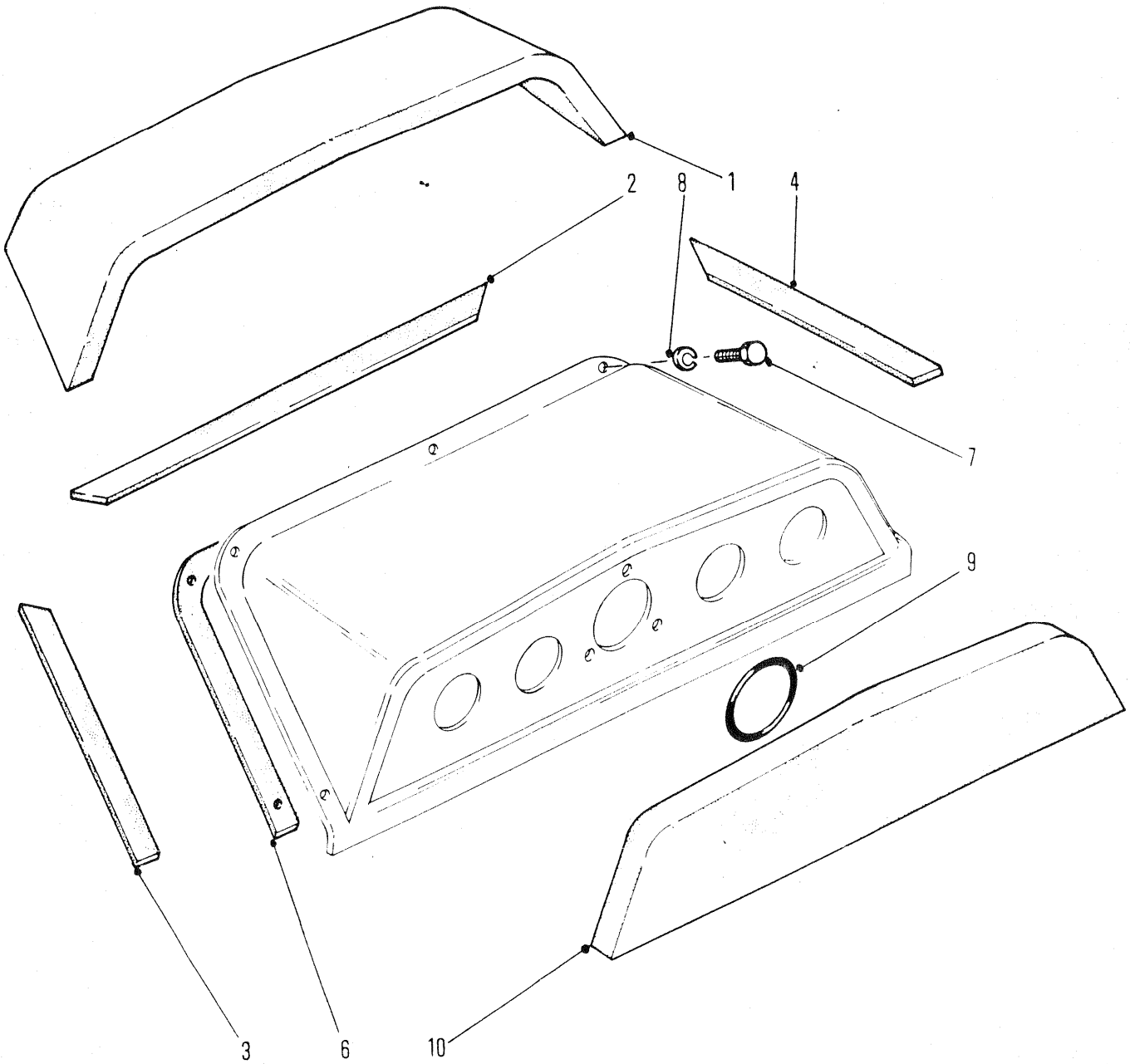


5798TP

## INSULATION-INSTRUMENT PANEL ⊠
## ISOLATION-TABLEAU DE BORD ⊠
## ISOLIERUNG-INSTRUMENTENBRETT ⊠
## ISOLAMENTO-PAINEL DE INSTRUMENTOS ⊠
## AISLACIÓN-PANEL DE INSTRUMENTOS ⊠

| No. | Part No. | Qty | Description | Description | Benennung | Descrição | Descripción |
|---|---|---|---|---|---|---|---|
| 1 | **1909247** | 1 | Insulation | isolation | Isolierung | isolamento | aislación |
| 2 | **1909248** | 1 | Insulation | isolation | Isolierung | isolamento | aislación |
| 3 | **1909249** | 1 | Insulation LH | isolation CG | Isolierung L | isolamento LE | aislación LI |
| 4 | **1909250** | 1 | Insulation RH | isolation CD | Isolierung R | isolamento LD | aislación LD |
| 5 | **1913913** | - | Adhesive | Adhésif | Klebstoff | adesivo | Adhesivo |
| 6 | [1]**1915077** | 1 | Gasket | garniture | Dichtung | gaxeta | empaquetadura |
| 7 | [1]**17C000420** | 5 | Bolt | boulon | Bolzen | parafuso | bulón |
| 8 | [1]**24E000004** | 5 | Lockwasher | rondelle frein | Sicherungsscheibe | arruela de pressão | arandela seguridad |
| 9 | **25K040200** | 4 | O-ring | joint torique | O Ring | anel-O | anillo-O |
| 10 | **1909246** | 1 | Insulation | isolation | Isolierung | isolamento | aislación |

[1] 664,666

666CUM 500E-101-CAC→500G-9999-CAC
666GM 513E-101-CAC→513G-9999-CAC

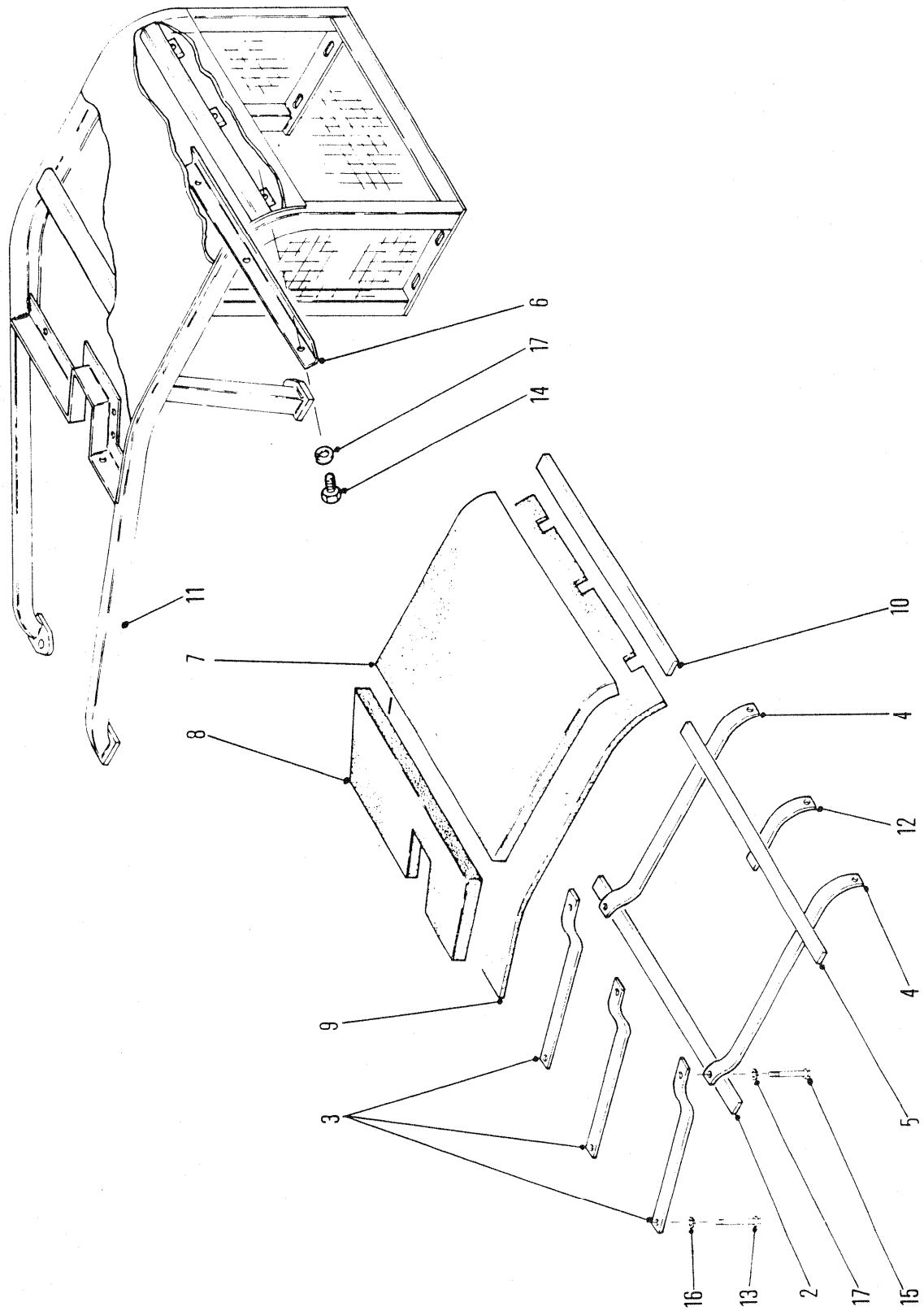
5799TP
6
17
14
11
7
8
10
4
12
4
9
3
5
16
13
2
17
15

# INSULATION-CANOPY
# ISOLATION-DAIS
# ISOLIERUNG-KLAPPVERDECK
# INSULAÇÃO-DOSEL
# AISLAMIENTO-DOSEL

| No. | Part No. | Qty | Description | Description | Benennung | Descrição | Descripción |
|---|---|---|---|---|---|---|---|
| 1 | ‡†1913913 | - | Adhesive | Adhésif | Klebstoff | adesivo | Adhesivo |
| 2 | **1914827** | 1 | Support | support | Abstützung | suporte | soporte |
| 3 | **1914828** | 3 | Strap | bande | Band | faixa | banda |
| 4 | **1914830** | 2 | Strap | bande | Band | faixa | banda |
| 5 | **1914831** | 1 | Support | support | Abstützung | suporte | soporte |
| 6 | **1914832** | 1 | Retainer | arrêtoir | Halterung | retentor | retén |
| 7 | **1914833** | 1 | Insulation | isolation | Isolierung | isolamento | aislación |
| 8 | **1914834** | 1 | Insulation | isolation | Isolierung | isolamento | aislación |
| 9 | **1914835** | 1 | Insulation | isolation | Isolierung | isolamento | aislación |
| 10 | **1914836** | 1 | Insulation | isolation | Isolierung | isolamento | aislación |
| 11 | **1914837** | 1 | Canopy | dais | Schutzdach | dossel | dosel |
| 12 | **1914926** | 1 | Strap | bande | Band | faixa | banda |
| 13 | **17C000412** | 3 | Bolt | boulon | Bolzen | parafuso | bulón |
| 14 | **18C000620** | 3 | Bolt | boulon | Bolzen | parafuso | bulón |
| 15 | **18C000644** | 4 | Bolt | boulon | Bolzen | parafuso | bulón |
| 16 | **24E000004** | 3 | Lockwasher | rondelle frein | Sicherungsscheibe | arruela de pressão | arandela seguridad |
| 17 | **24E000006** | 7 | Lockwasher | rondelle frein | Sicherungsscheibe | arruela de pressão | arandela seguridad |

666CUM 500E-101-CAC→500E-9999-CAC
666GM 513E-101-CAC→513E-9999-CAC

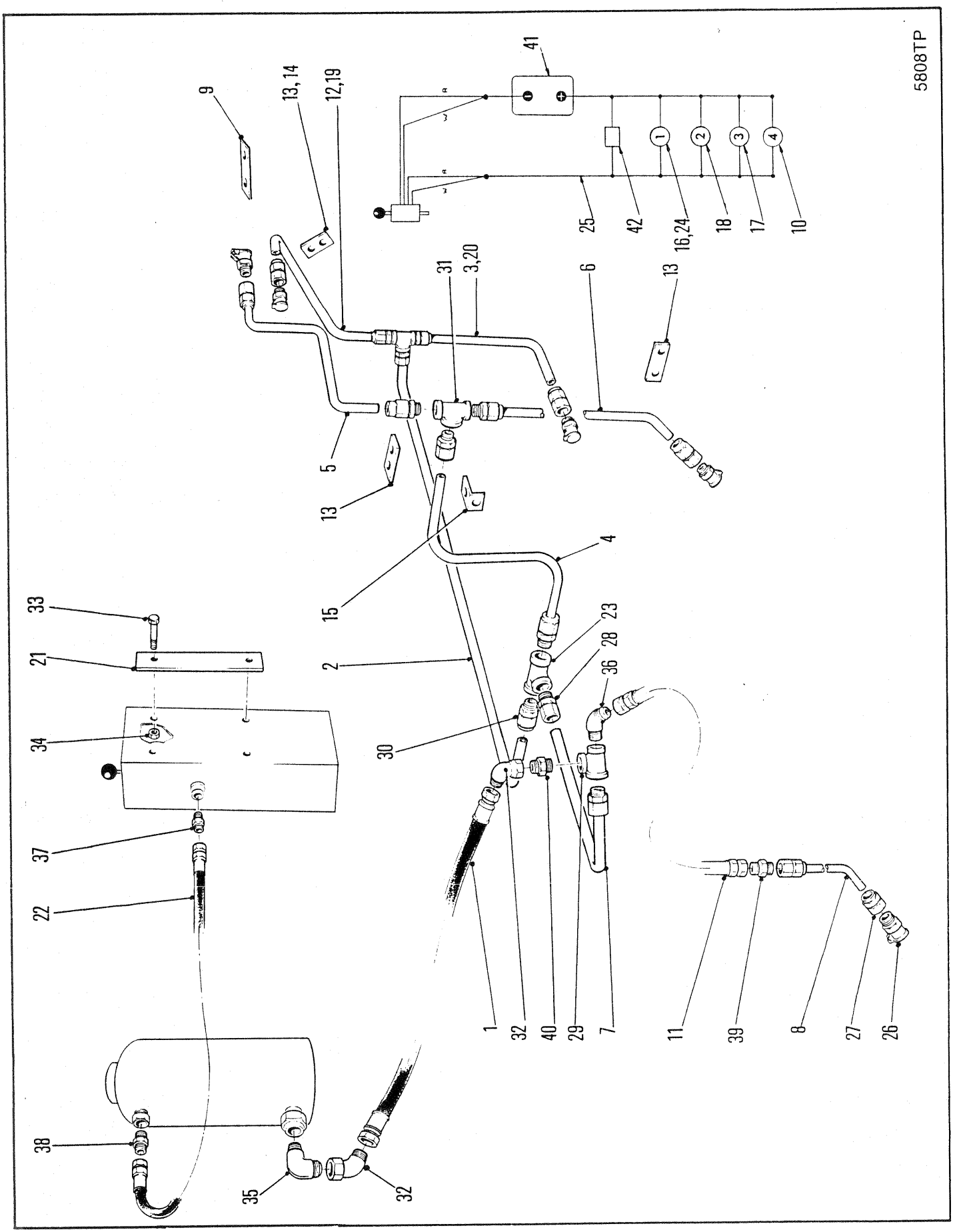
5808TP
41
9
13,14
12,19
25
42
16,24
18
17
10
31
3,20
6
13
5
13
15
4
33
21
2
23
28
36
34
30
37
22
1
32
40
29
7
11
39
8
27
26
38
35
32

# FIRE SUPPRESSION KIT
# JEU D'EXTINCTION D'INCENDIE
# FEURERSICHERHEITSSATZ
# JÔGO EXTINTOR DE INCÊNDIO
# JUEGO CONTRAFUEGO

| No. | Part No. | Qty | Description | Description | Benennung | Descrição | Descripción |
|---|---|---|---|---|---|---|---|
| 1 | **560706** | 1 | Hose | tuyau flexible | Schlauch | mangueira | manguera |
| 2 | **1916858** | 1 | Tube | tube | Rohr | tubo | tubo |
| 3 | [1]**1916860** | 1 | Tube | tube | Rohr | tubo | tubo |
| 4 | **1916861** | 1 | Tube | tube | Rohr | tubo | tubo |
| 5 | **1916862** | 1 | Tube | tube | Rohr | tubo | tubo |
| 6 | **1916863** | 1 | Tube | tube | Rohr | tubo | tubo |
| 7 | **1916864** | 1 | Tube | tube | Rohr | tubo | tubo |
| 8 | **1916865** | 1 | Tube | tube | Rohr | tubo | tubo |
| 9 | **1916868** | 1 | Bracket | support | Winkel | grampo | grampa |
| 10 | **1916872** | 1 | Bracket | support | Winkel | grampo | grampa |
| 11 | **1916955** | 1 | Hose assy | ens tuyaux souples | Schlauch vollst | conj mangueira | conj manguera |
| 12 | [1]**1920970** | 1 | Tube | tube | Rohr | tubo | tubo |
| 13 | [2]**1921048** | 3 | Bracket | support | Winkel | grampo | grampa |
| 14 | [1]**1921049** | 1 | Bracket | support | Winkel | grampo | grampa |
| 15 | **1921050** | 1 | Bracket | support | Winkel | grampo | grampa |
| 16 | **1921051** | 1 | Bracket | support | Winkel | grampo | grampa |
| 17 | **1921052** | 1 | Bracket | support | Winkel | grampo | grampa |
| 18 | **1921053** | 1 | Bracket | support | Winkel | grampo | grampa |
| 19 | [2]**1921429** | 1 | Tube | tube | Rohr | tubo | tubo |
| 20 | [2]**1921430** | 1 | Tube | tube | Rohr | tubo | tubo |
| 21 | **1924638** | 4 | Flat | méplat | Fläche | bloco plano | planchuela |
| 22 | **1924659** | 1 | Hose | tuyau flexible | Schlauch | mangueira | manguera |
| 23 | **1924661** | 1 | Fitting tee | raccord en T | T-Stück | ajuste em T | accesorio en T |
| 24 | **1924669** | 4 | Sensor | capteur | Fühler | sensor | sensor |
| 25 | **1929283** | 1 | Trunk wire | câble de plancher | Fernkabel | arame de mal | cable del baúl |
| 26 | **1991318** | 5 | Nozzle | gicleur | Düse | bocal | boquilla |
| 27 | **1991877** | 6 | Fitting tube | raccord tube | Rohrverbindung | guarnição tubo | accesorio tubo |
| 28 | **1991878** | 5 | Fitting tube | raccord tube | Rohrverbindung | guarnição tubo | accesorio tubo |
| 29 | **1991879** | 1 | Fitting tee | raccord en T | T-Stück | ajuste em T | accesorio en T |
| 30 | **1991880** | 8 | Fitting tube | raccord tube | Rohrverbindung | guarnição tubo | accesorio tubo |
| 31 | †**1991881** | 2 | Fitting tee | raccord en T | T-Stück | ajuste em T | accesorio en T |
| 32 | **12K000008** | 2 | Fitting | ajustage | Verbindung | ajuste | accesorio |
| 33 | **17C000624** | 8 | Bolt | boulon | Bolzen | parafuso | bulón |
| 34 | **59D000006** | 8 | Nut | écrou | Mutter | porca | tuerca |
| 35 | **83F000008** | 1 | Elbow | coude | Winkelrohr | cotovêlo | codo |
| 36 | **84F000007** | 1 | Elbow | coude | Winkelrohr | cotovêlo | codo |
| 37 | **89F000005** | 1 | Adaptor | adaptateur | Zwischenstück | adaptador | adaptador |
| 38 | **89F000006** | 1 | Adaptor | adaptateur | Zwischenstück | adaptador | adaptador |
| 39 | **89F000007** | 1 | Connector | raccord | Verbindungsstück | ligador | conector |
| 40 | **89F000008** | 1 | Adaptor | adaptateur | Zwischenstück | adaptador | adaptador |
| 41 | ---------- | 1 | Battery | batterie | Batterie | bateria | batería |
| 42 | ---------- | 1 | Switch | interrupteur | Schalter | interruptor | interruptor |

[1] GM

[2] CUM

666CUM 500F-101-CAC➡500G-9999-CAC
666GM 513F-101-CAC➡513G-9999-CAC

## FAN BELT CHART

DATA-J1 10000-0183

666B

| MODEL | MACHINE SERIAL NUMBER | BELT NO. | QUANTITY |
|---|---|---|---|
| 662 FORD | 501A-101-CAC→501B-9999-CAC | N/A | |
| 662 GM | 502A-101-CAC→502B-9999-CAC | 1904600 | 1* |
| 664 GM | C-9014-101→C-9044-9999 | N/A | |
| 664 GM | 514E-101-CAC→514F-9999-CAC | 3678178 | 1* |
| 664 GM | 514H-101-CAC→514H-9999-CAC | 1992017 | 1* |
| 664 GM | 528A-101-CAC→528D-9999-CAC | 1992017 | 1* |
| 664 CUM | 551D-101-CAC→551G-9999-CAC | 1992449 | 1 |
| 664 GM | 546H-101-CAC→546H-9999-CAC | 1904600 | 1* |
| 664 DEUTZ | 529B-101-CAC→529D-9999-CAC | 1992340 | 1 |
| ------ | | | |
| 664 GM GR | 508A-101-CAC→508A-9999-CAC | N/A | |
| 664 GM GR | 508B-101-CAC→508B-9999-CAC | 3678178 | 1* |
| 664 GM GR | 508H-101-CAC→508H-9999-CAC | 1992017 | 1* |
| 665 GM | 541B-101-CAC→541F-9999-CAC | 1992017 | 1* |
| 665 CUM | 553G-101-CAC→553G-9999-CAC | 1992449 | 1 |
| 665 GM GR | 543B-101-CAC→543F-9999-CAC | 1992017 | 1* |
| 665 GM GR | 558F-101-CAC→558G-9999-CAC | 1992017 | 1 |
| 665 CUM GR | 554G-101-CAC→554G-9999-CAC | 1992449 | 1 |
| 666 GM | C-9016-101→C-9046-9999 | N/A | |
| 666 GM | 513E-101-CAC→513G-9999-CAC | 3678231 | 1* |
| 666 GM | 513H-101-CAC→513H-9999-CAC | 1904600 | 1* |
| 666 GM | 548A-101-CAC→548A-9999-CAC | 1904600 | 1* |
| 666 GM SWB | 526A-101-CAC→526A-9999-CAC | 3678231 | 1* |
| 666 CUM | 500D-101-CAC→500G-9999-CAC | 1501855 | 1* |
| 666 CUM | 500H-101-CAC→500H-9999-CAC | 947289 | 1* |
| 666 CUM | 559A-101-CAC→559B-9999-CAC | 1992449 | 1 |
| 666 CUM SWB | 527A-101-CAC→527A-9999-CAC | 1501855 | 1* |
| ------ | | | |
| 666 GM GR | 515A-101-CAC→515A-9999-CAC | 3678231 | 1* |
| 666 GM GR | 515H-101-CAC→515H-9999-CAC | 1904600 | 1* |
| 666 GM GR Ext | 542H-101-CAC→542H-9999-CAC | 1904600 | 1* |
| 666 GM GR | 549A-101-CAC→549A-9999-CAC | 1904600 | 1* |
| 666 GM GR | 552A-101-CAC→552A-9999-CAC | 1904600 | 1* |
| 666 CUM GR | 555A-101-CAC→555B-9999-CAC | 1992449 | 1 |
| 666 CUM GR | 564A-101-CAC→564B-9999-CAC | 1992449 | 1 |
| 667 GM | 503A-101-CAC→503A-9999-CAC | 3678231 | 1* |
| 667 GM | 503B-101-CAC→503B-9999-CAC | 1904600 | 1* |
| 667 GM | 534B-101-CAC→534E-9999-CAC | 1904600 | 1* |
| 667 GM | 556F-101-CAC→556G-9999-CAC | 1904600 | 1* |
| 667 GM FWD | 521A-101-CAC→521A-9999-CAC | 3678231 | 1* |

*Matched-set of two (2) belts

## FAN BELT CHART (Cont'd)

DATA-J1 10000-0183

666B

| MODEL | MACHINE SERIAL NUMBER | BELT NO. | QUANTITY |
|---|---|---|---|
| 667 CUM | 504A-101-CAC→504A-9999-CAC | 1990515 | 1* |
| 667 CUM | 504B-101-CAC→504C-9999-CAC | 1992140 | 1* |
| 667 CUM | 535A-101-CAC→535G-9999-CAC | 1990515 | 1* |
| 667 CUM | 561H-101-CAC→561H-9999-CAC | 1992593 | 1 |
| 667 CUM FWD | 522A-101-CAC→522A-9999-CAC | 1990515 | 1* |
| 667 GM GR | 509A-101-CAC→509A-9999-CAC | 3678231 | 1* |
| 667 GM GR | 509B-101-CAC→509B-9999-CAC | 1904600 | 1* |
| 667 GM GR | 536B-101-CAC→536E-9999-CAC | 1904600 | 1* |
| 667 GM GR | 557F-101-CAC→557G-9999-CAC | 1904600 | 1* |
| 667 CUM GR | 510A-101-CAC→510A-9999-CAC | 1990515 | 1* |
| 667 CUM GR | 510B-101-CAC→510C-9999-CAC | 1992140 | 1* |
| 667 CUM GR | 537A-101-CAC→537G-9999-CAC | 1990515 | 1* |
| 667 CUM GR | 560H-101-CAC→560H-9999-CAC | 1992593 | 1 |
| 668 GM | 505A-101-CAC→505B-9999-CAC | 541736 | 1* |
| 668 GM | 505C-101-CAC→505C-9999-CAC | 1992018 | 1* |
| 668 CUM | 507A-101-CAC→507B-9999-CAC | 1990515 | 1* |
| 668 CUM | 507C-101-CAC→507E-9999-CAC | 2502452 | 1* |
| ------ | | | |
| 668 GM GR | 533A-101-CAC→533A-9999-CAC | 1992018 | 1* |
| 668 GM GR | 538C-101-CAC→538C-9999-CAC | 1992018 | 1* |
| 668 CUM GR | 532A-101-CAC→532E-9999-CAC | 2502452 | 1* |
| 668 CUM GR | 539C-101-CAC→539E-9999-CAC | 2502452 | 1* |

*Matched-set of two (2) belts

## ALTERNATOR DRIVE BELT CHART

DATA-J1 20000-0183

666B

| MODEL | MACHINE SERIAL NUMBER | BELT NO. | QUANTITY |
|---|---|---|---|
| 662 FORD | 501A-101-CAC→501B-9999-CAC | 1305202 | 1 |
| 662 GM | 502A-101-CAC→502B-9999-CAC | 1305106 | 1* |
| 664 GM | C-9014-101→C-9044-9999 | 1305106 | 1* |
| 664 GM | 514E-101-CAC→514F-9999-CAC | 1305106 | 1* |
| 664 GM | 514H-101→1935-CAC | 1922597 | 2 |
| 664 GM | 514H-1936→9999-CAC | 961262 | 1* |
| 664 GM | 528A-101-CAC→528D-9999-CAC | 961262 | 1* |
| 664 CUM | 551D-101-CAC→551G-9999-CAC | 1992449 | 1 |
| 664 GM | 546H-101-CAC→546H-9999-CAC | 1922597 | 2 |
| 664 DEUTZ | 529B-101-CAC→529D-9999-CAC | 1931218 | 1 |
| --- | | | |
| 664 GM GR | 508A-101-CAC→508B-9999-CAC | 1305106 | 1* |
| 664 GM GR | 508H-101→212-CAC | 1922597 | 2 |
| 664 GM GR | 508H-213→9999-CAC | 961262 | 1* |
| 665 GM | 541B-101-CAC→541F-9999-CAC | 961262 | 1* |
| 665 CUM | 553G-101-CAC→553G-9999-CAC | 1992449 | ** |
| 665 GM GR | 543B-101-CAC→543F-9999-CAC | 961262 | 1* |
| 665 GM GR | 558F-101-CAC→558G-9999-CAC | 961262 | 1 |
| 665 CUM GR | 554G-101-CAC→554G-9999-CAC | 1992449 | ** |
| 666 GM | C-9016-101→C-9046-9999 | 1305106 | 1* |
| 666 GM | 513E-101-CAC→513G-9999-CAC | 1305106 | 1* |
| 666 GM | 513H-101→3136-CAC | 1922597 | 2 |
| 666 GM | 513H-3137→9999-CAC | 961262 | 1* |
| 666 GM | 548A-101-CAC→548A-9999-CAC | 961262 | 1* |
| 666 CUM | 500D-101-CAC→500H-9999-CAC | 949985 | 1* |
| --- | | | |
| 666 CUM | 559A-101-CAC→559B-9999-CAC | 1992449 | 1 |
| 666 GM GR | 515A-101-CAC→515A-9999-CAC | 1305106 | 1* |
| 666 GM GR | 515H-101→1020-CAC | 1922597 | 2 |
| 666 GM GR | 515H-1021→9999-CAC | 961262 | 1* |
| 666 GM GR Ext | 542H-101→522-CAC | 1922597 | 2 |
| 666 GM GR Ext | 542H-523-CAC→542H-9999-CAC | 961262 | 1* |
| 666 GM GR | 549A-101-CAC→549A-9999-CAC | 961262 | 1* |
| 666 GM GR | 552A-101-CAC→552A-9999-CAC | 961262 | 1* |
| 666 GM SWB | 526A-101-CAC→526H-9999-CAC | 961262 | 1* |
| 666 CUM SWB | 527A-101-CAC→527A-9999-CAC | 949985 | 1* |
| 666 CUM GR | 555A-101-CAC→555B-9999-CAC | 1992449 | 1 |
| 666 CUM GR | 564A-101-CAC→564B-9999-CAC | 1992449 | 1 |
| 667 GM | 503A-101-CAC→503A-9999-CAC | 1305106 | 1* |
| 667 GM | 503B-101-CAC→503B-9999-CAC | 1922597 | 2 |

**See Fan Belt Chart
*Matched-set of two (2) belts

## ALTERNATOR DRIVE BELT CHART (Cont'd)

DATA-J1 20000-0183

666B

| MODEL | MACHINE SERIAL NUMBER | BELT NO. | QUANTITY |
|---|---|---|---|
| 667 GM | 534B-101-CAC→710-CAC | 557527 | 1* |
| 667 GM | 534B-711-CAC→534E-9999-CAC | 3678218 | 1* |
| 667 GM | 556G-101-CAC→556G-9999-CAC | 3678218 | 1* |
| 667 GM FWD | 521A-101-CAC→521A-9999-CAC | 1305106 | 1* |
| 667 CUM | 504A-101-CAC→504A-9999-CAC | 949985 | 1* |
| 667 CUM | 504B-101-CAC→504C-9999-CAC | 960419 | 1* |
| 667 CUM | 535A-101-CAC→535E-9999-CAC | 960419 | 1* |
| 667 CUM | 561H-101-CAC→561H-9999-CAC | 1992593 | 1 |
| 667 CUM FWD | 522A-101-CAC→522A-9999-CAC | 949985 | 1* |
| 667 GM GR | 509A-101-CAC→509A-9999-CAC | 1305106 | 1* |
| 667 GM GR | 509B-101-CAC→509B-9999-CAC | 1922597 | 2 |
| 667 GM GR | 536B-101→210-CAC | 557527 | 1* |
| 667 GM GR | 536B-211-CAC→536E-9999-CAC | 3678218 | 1* |
| 667 GM GR | 557G-101-CAC→557G-9999-CAC | 3678218 | 1* |
| 667 CUM GR | 510A-101-CAC→510A-9999-CAC | 949985 | 1* |
| 667 CUM GR | 510B-101-CAC→510C-9999-CAC | 960419 | 1* |
| 667 CUM GR | 537A-101-CAC→537G-9999-CAC | 960419 | 1* |
| 667 CUM GR | 560H-101-CAC→560H-9999-CAC | 1992593 | 1 |
| 668 GM | 505A-101-CAC→505D-9999-CAC | 557527 | 1* |
| 668 CUM | 507A-101-CAC→507A-9999-CAC | 1990436 | 1* |
| 668 CUM | 507B-101-CAC→507B-9999-CAC | 1992354 | 1* |
| 668 CUM | 507C-101-CAC→507E-9999-CAC | 1991995 | 1* |
| ------ | | | |
| 668 GM GR | 533A-101-CAC→533A-9999-CAC | 557527 | 1* |
| 668 GM GR | 538C-101-CAC→538C-9999-CAC | 557527 | 1* |
| 668 CUM GR | 532A-101-CAC→532E-9999-CAC | 1991995 | 1* |
| 668 CUM GR | 539C-101-CAC→539E-9999-CAC | 1991995 | 1* |
| 880 GM | 511A-101-CAC→511B-9999-CAC | 961658 | 1* |
| 880 CUM | 512A-101-CAC→512B-9999-CAC | N/A | |

**See Fan Belt Chart
*Matched-set of two (2) belts

# ENGINE FILTERS - DETROIT DIESEL

## SPIN-ON

DATA-J1 50000-0183

666B

| ENGINE | LUBE OIL | FUEL FILTER | |
|---|---|---|---|
| | | PRIMARY | SECONDARY |
| 3-53 | 1992247 | 1992217 | 1992215 |
| 3-53T | 1992247 | 1992217 | 1992215 |
| 4-53 | 1992248 | 1992217 | 1992215 |
| 4-53T | 1992248 | 1992217 | 1992215 |
| 6V-53 | 1992248 | 1992216 | 1992214 |

## CARTRIDGE

| ENGINE | LUBE OIL | FUEL FILTER | |
|---|---|---|---|
| | | PRIMARY | SECONDARY |
| 3-53 | 946008 | 945444 | 944408 |
| 3-53T | 946008 | 945444 | 944408 |
| 4-53 | 215502 | 945444 | 944408 |
| 4-53T | 215502 | 945444 | 944408 |
| 6V-53 | 215502 | 945446 | 945445 |

# ENGINE FILTERS - DEUTZ

## SPIN-ON

| ENGINE | LUBE OIL | FUEL FILTER |
|---|---|---|
| F5L912 | 1992338 | 4111378 |

# ENGINE FILTERS - CUMMINS

## SPIN-ON

DATA-J1 50000-0183

666B

| ENGINE MODEL | FULL-FLOW OIL FILTER ELEMENT | BY-PASS OIL FILTER ELEMENT | CORROSION RESISTOR ELEMENT | FUEL FILTER ELEMENT |
|---|---|---|---|---|
| 4BT3.9 | 1992368 | N/A | N/A | 1992367<br>*1992366 |
| 6BT5.9 | 1992450 | N/A | N/A | 1992367<br>*1992366 |
| VT-378-C | 1992235 | 963023 | 961028 | 949095 |
| V-504 | 1992235 | 963023 | 961028 | 949095 |
| VT-555C | 1992235 | 963023 | 961028 | 949095 |

*Water Separator

## CARTRIDGE

| ENGINE MODEL | FULL-FLOW OIL FILTER ELEMENT | BY-PASS OIL FILTER ELEMENT |
|---|---|---|
| V-378C | 949096 | 949098<br>947293 (LARGE) |
| V-504 | 949096 | 949098 |
| VT-555C | 946011 | 949098 |

*Spin-on

## PRE FUEL

| ENGINE MODEL | IN-LINE FUEL FILTER |
|---|---|
| 4BTA3.9 | 1992594 |
| 6BT.5.9 | 1992594 |
| 6BTA.5.9 | 1992594 |

# NUMERICAL INDEX

RANGER

| Part No. | Group No. | Microfiche Loc. |
|---|---|---|
| 100171 | A 4 15000 | 1 F 20 |
| | A 4 15610 | 1 G 4 |
| 100172 | A 4 15000 | 1 F 20 |
| | A 4 15610 | 1 G 4 |
| 100173 | A 4 15000 | 1 F 20 |
| | A 4 15610 | 1 G 4 |
| 100174 | A 4 14950 | 1 F 18 |
| | A 4 15000 | 1 F 20 |
| | A 4 15600 | 1 G 2 |
| | A 4 15610 | 1 G 4 |
| 100176 | A 4 14950 | 1 F 18 |
| | A 4 15000 | 1 F 20 |
| | A 4 15600 | 1 G 2 |
| | A 4 15610 | 1 G 4 |
| | A 4 21500 | 1 H 6 |
| | A 4 25600 | 1 H 10 |
| 100940 | A 4 21500 | 1 H 6 |
| 100941 | A 4 14950 | 1 F 18 |
| | A 4 15000 | 1 F 20 |
| | A 4 15600 | 1 G 2 |
| | A 4 15610 | 1 G 4 |
| | A 4 21500 | 1 H 6 |
| | A 4 25600 | 1 H 10 |
| | A 4 25700 | 1 H 15 |
| | A 4 25900 | 1 H 19 |
| 100950 | A 4 21500 | 1 H 6 |
| | A 4 25600 | 1 H 10 |
| 100953 | A 4 21500 | 1 H 6 |
| 100954 | A 4 21500 | 1 H 6 |
| 100970 | A 4 10000 | 1 F 2 |
| | A 4 10600 | 1 F 6 |
| | A 4 11000 | 1 F 16 |
| | A 4 20610 | 1 G 12 |
| | A 4 21000 | 1 G 24 |
| 101196 | A 4 25700 | 1 H 15 |
| | A 4 25900 | 1 H 19 |
| 101257 | A 4 25700 | 1 H 15 |
| | A 4 25900 | 1 H 19 |
| 101259 | A 4 25700 | 1 H 15 |
| 101261 | A 4 25700 | 1 H 15 |
| 101262 | A 4 25700 | 1 H 15 |
| | A 4 25900 | 1 H 19 |
| 101263 | A 4 25700 | 1 H 15 |
| | A 4 25900 | 1 H 19 |
| 101274 | A 4 10000 | 1 F 2 |
| | A 4 10700 | 1 F 11 |
| | A 4 11000 | 1 F 16 |
| | A 4 21000 | 1 G 24 |
| | A 4 21200 | 1 H 2 |
| 102745 | A 2 10050 | 1 C 18 |
| | A 2 10150 | 1 D 2 |
| | A 2 10200 | 1 D 8 |
| | A 3 10000 | 1 D 17 |
| | A 3 10050 | 1 D 22 |
| | A 6 24050 | 1 L 20 |
| | A 6 24150 | 2 A 9 |
| 103076 | A 4 10000 | 1 F 2 |
| | A 4 11000 | 1 F 16 |
| | A 4 21000 | 1 G 24 |
| 103216 | A 4 10000 | 1 F 2 |
| | A 4 10600 | 1 F 6 |
| | A 4 10700 | 1 F 11 |
| | A 4 11000 | 1 F 16 |
| | A 4 20610 | 1 G 12 |
| | A 4 21000 | 1 G 24 |
| | A 4 21200 | 1 H 2 |
| 103293 | A 1 25100 | 1 C 6 |
| | A 1 40000 | 0 0 |
| 103522 | F 2 96400 | 3 C 2 |
| | F 2 96470 | 3 C 4 |
| | F 2 96880 | 3 C 20 |
| | F 2 96900 | 3 C 22 |
| 104182 | A 4 14950 | 1 F 18 |
| | A 4 15000 | 1 F 20 |
| | A 4 15600 | 1 G 2 |

| Part No. | Group No. | Microfiche Loc. |
|---|---|---|
| 104182 | A 4 15610 | 1 G 4 |
| 104226 | A 4 25700 | 1 H 15 |
| 104412 | A 4 10600 | 1 F 7 |
| | A 4 10700 | 1 F 12 |
| | A 4 20610 | 1 G 12 |
| | A 4 20700 | 1 G 16 |
| | A 4 21200 | 1 H 2 |
| 106058 | A 4 10000 | 1 F 2 |
| | A 4 11000 | 1 F 16 |
| | A 4 21000 | 1 G 24 |
| 106059 | A 4 10000 | 1 F 2 |
| | A 4 11000 | 1 F 16 |
| | A 4 21000 | 1 G 24 |
| 106081 | A 4 14950 | 1 F 18 |
| | A 4 15000 | 1 F 20 |
| | A 4 15600 | 1 G 2 |
| | A 4 15610 | 1 G 4 |
| | A 4 21500 | 1 H 6 |
| | A 4 25600 | 1 H 10 |
| 106246 | A 4 20700 | 1 G 16 |
| 106247 | A 4 10700 | 1 F 11 |
| | A 4 20700 | 1 G 16 |
| | A 4 21200 | 1 H 2 |
| 106349 | A 4 30100 | 1 H 23 |
| 106350 | A 4 30100 | 1 H 23 |
| 106351 | A 4 30100 | 1 H 23 |
| 106352 | A 4 30100 | 1 H 23 |
| 106355 | A 4 30320 | 1 I 6 |
| 106357 | A 4 30320 | 1 I 6 |
| 106358 | A 4 30320 | 1 I 6 |
| 106359 | A 4 30320 | 1 I 6 |
| 106455 | A 4 10000 | 1 F 2 |
| | A 4 11000 | 1 F 16 |
| | A 4 21000 | 1 G 24 |
| 106457 | A 4 10700 | 1 F 11 |
| | A 4 20700 | 1 G 16 |
| | A 4 21200 | 1 H 2 |
| 106547 | A 4 10700 | 1 F 11 |
| | A 4 20700 | 1 G 16 |
| | A 4 21200 | 1 H 2 |
| | A 4 25900 | 1 H 19 |
| 106656 | A 4 20700 | 1 G 16 |
| 106762 | A 4 10000 | 1 F 2 |
| | A 4 10600 | 1 F 6 |
| | A 4 11000 | 1 F 16 |
| | A 4 14950 | 1 F 18 |
| | A 4 15000 | 1 F 20 |
| | A 4 15600 | 1 G 2 |
| | A 4 15610 | 1 G 4 |
| | A 4 20610 | 1 G 12 |
| | A 4 20700 | 1 G 16 |
| | A 4 21000 | 1 G 24 |
| | A 4 21500 | 1 H 6 |
| | A 4 25600 | 1 H 10 |
| 106880 | A 4 10000 | 1 F 2 |
| | A 4 11000 | 1 F 16 |
| | A 4 21000 | 1 G 24 |
| 106998 | A 4 10600 | 1 F 7 |
| | A 4 10700 | 1 F 12 |
| | A 4 20610 | 1 G 12 |
| | A 4 21200 | 1 H 2 |
| 107016 | A 4 10000 | 1 F 2 |
| | A 4 11000 | 1 F 16 |
| | A 4 21000 | 1 G 24 |
| 107100 | A 4 20700 | 1 G 16 |
| 107348 | A 4 10600 | 1 F 6 |
| | A 4 20610 | 1 G 12 |
| 109088 | A 4 30100 | 1 H 23 |
| 110127 | A 4 25600 | 1 H 10 |
| 110552 | A 4 20700 | 1 G 16 |
| 110553 | A 4 20700 | 1 G 16 |
| 110559 | A 4 20700 | 1 G 16 |
| 110622 | A 4 20700 | 1 G 16 |
| 110624 | A 4 20700 | 1 G 16 |
| 110843 | A 4 25700 | 1 H 15 |

| Part No. | Group No. | Microfiche Loc. |
|---|---|---|
| 110844 | A 4 25900 | 1 H 19 |
| 111656 | A 4 21500 | 1 H 6 |
| 112054 | A 4 10000 | 1 F 2 |
| 112077 | A 4 20700 | 1 G 16 |
| 112278 | A 4 10000 | 1 F 2 |
| | A 4 10600 | 1 F 6 |
| | A 4 10700 | 1 F 11 |
| | A 4 11000 | 1 F 16 |
| | A 4 20610 | 1 G 12 |
| | A 4 20700 | 1 G 16 |
| | A 4 21000 | 1 G 24 |
| | A 4 21200 | 1 H 2 |
| 112279 | A 4 14950 | 1 F 18 |
| | A 4 15000 | 1 F 20 |
| | A 4 15600 | 1 G 2 |
| | A 4 15610 | 1 G 4 |
| | A 4 21500 | 1 H 6 |
| | A 4 25600 | 1 H 10 |
| 112286 | A 4 20700 | 1 G 16 |
| 112287 | A 4 10000 | 1 F 2 |
| | A 4 11000 | 1 F 16 |
| | A 4 20700 | 1 G 16 |
| | A 4 21000 | 1 G 24 |
| 112289 | A 4 25700 | 1 H 15 |
| | A 4 25900 | 1 H 19 |
| 112350 | A 4 21500 | 1 H 6 |
| 112351 | A 4 25600 | 1 H 10 |
| 112352 | A 4 14950 | 1 F 18 |
| | A 4 15000 | 1 F 20 |
| | A 4 15600 | 1 G 2 |
| | A 4 15610 | 1 G 4 |
| | A 4 21500 | 1 H 6 |
| | A 4 25600 | 1 H 10 |
| 112354 | A 4 14950 | 1 F 18 |
| | A 4 15000 | 1 F 20 |
| | A 4 15600 | 1 G 2 |
| | A 4 15610 | 1 G 4 |
| | A 4 21500 | 1 H 6 |
| | A 4 25600 | 1 H 10 |
| 113289 | A 4 20700 | 1 G 16 |
| | A 4 21200 | 1 H 2 |
| 113290 | A 4 10700 | 1 F 11 |
| 113292 | A 4 10700 | 1 F 11 |
| | A 4 20700 | 1 G 16 |
| | A 4 21200 | 1 H 2 |
| 113850 | A 4 10000 | 1 F 2 |
| | A 4 11000 | 1 F 16 |
| | A 4 21000 | 1 G 24 |
| 113929 | A 4 10000 | 1 F 2 |
| | A 4 10600 | 1 F 6 |
| | A 4 10700 | 1 F 11 |
| | A 4 11000 | 1 F 16 |
| | A 4 20610 | 1 G 12 |
| | A 4 20700 | 1 G 16 |
| | A 4 21000 | 1 G 24 |
| | A 4 21200 | 1 H 2 |
| 114089 | A 4 10000 | 1 F 2 |
| | A 4 11000 | 1 F 16 |
| | A 4 21000 | 1 G 24 |
| 114119 | A 4 10000 | 1 F 2 |
| | A 4 11000 | 1 F 16 |
| | A 4 21000 | 1 G 24 |
| 114433 | A 4 10000 | 1 F 2 |
| | A 4 10700 | 1 F 11 |
| | A 4 11000 | 1 F 16 |
| | A 4 21000 | 1 G 24 |
| | A 4 21200 | 1 H 2 |
| 115890 | B 1 23050 | 2 F 12 |
| | B 1 23100 | 2 F 14 |
| 115971 | B 1 20175 | 2 F 6 |
| | B 1 23150 | 2 F 16 |
| 116419 | A 4 10000 | 1 F 2 |
| | A 4 11000 | 1 F 16 |
| | A 4 21000 | 1 G 24 |
| 116584 | A 4 30320 | 1 I 6 |
| 116588 | A 4 10700 | 1 F 11 |
| | A 4 21200 | 1 H 2 |
| 116594 | A 4 11000 | 1 F 16 |
| 116729 | A 4 25900 | 1 H 19 |
| 117218 | A 4 25700 | 1 H 15 |
| | A 4 25900 | 1 H 19 |
| 117225 | A 4 10700 | 1 F 11 |
| | A 4 20700 | 1 G 16 |
| | A 4 21200 | 1 H 2 |
| 117336 | A 4 10600 | 1 F 7 |
| | A 4 10700 | 1 F 12 |
| | A 4 20610 | 1 G 12 |
| | A 4 21200 | 1 H 2 |
| 117655 | A 4 11000 | 1 F 16 |
| | A 4 21000 | 1 G 24 |
| 118150 | A 4 15600 | 1 G 2 |
| | A 4 15610 | 1 G 4 |
| 118475 | A 4 25700 | 1 H 15 |
| 118704 | A 4 25700 | 1 H 15 |
| | A 4 25900 | 1 H 19 |
| 118719 | A 4 25700 | 1 H 15 |
| 118786 | A 4 20700 | 1 G 16 |
| 119211 | A 4 10700 | 1 F 11 |
| | A 4 21200 | 1 H 2 |
| 119270 | A 4 10000 | 1 F 2 |
| | A 4 10600 | 1 F 6 |
| | A 4 10700 | 1 F 11 |
| | A 4 11000 | 1 F 16 |
| | A 4 20610 | 1 G 12 |
| | A 4 21000 | 1 G 24 |
| | A 4 21200 | 1 H 2 |
| 119298 | A 4 21500 | 1 H 6 |
| | A 4 25600 | 1 H 10 |
| 119469 | A 4 10600 | 1 F 6 |
| | A 4 10700 | 1 F 11 |
| | A 4 20610 | 1 G 12 |
| | A 4 21200 | 1 H 2 |
| 119852 | A 4 20700 | 1 G 16 |
| 119853 | A 4 20700 | 1 G 16 |
| 120707 | A 4 10700 | 1 F 11 |
| | A 4 20700 | 1 G 16 |
| | A 4 21200 | 1 H 2 |
| 121013 | A 4 10600 | 1 F 6 |
| | A 4 20610 | 1 G 12 |
| 121014 | A 4 10600 | 1 F 6 |
| | A 4 20610 | 1 G 12 |
| 121015 | A 4 10600 | 1 F 6 |
| | A 4 20610 | 1 G 12 |
| 121166 | A 4 30115 | 1 I 2 |
| 121241 | A 4 25700 | 1 H 15 |
| | A 4 25900 | 1 H 19 |
| 121632 | A 4 30320 | 1 I 6 |
| 121633 | A 4 30320 | 1 I 6 |
| 121802 | A 4 10600 | 1 F 6 |
| | A 4 10700 | 1 F 11 |
| 121804 | A 4 10600 | 1 F 6 |
| | A 4 20610 | 1 G 12 |
| 121831 | A 4 11000 | 1 F 16 |
| | A 4 20700 | 1 G 16 |
| 121838 | A 4 20700 | 1 G 16 |
| 121851 | A 4 10600 | 1 F 6 |
| | A 4 20610 | 1 G 12 |
| 121980 | A 4 21000 | 1 G 24 |
| 122470 | A 4 10000 | 1 F 2 |
| 122471 | A 4 21000 | 1 G 24 |
| 122664 | A 4 10000 | 1 F 2 |
| | A 4 11000 | 1 F 16 |
| | A 4 21000 | 1 G 24 |
| 122701 | A 4 10700 | 1 F 11 |
| | A 4 21200 | 1 H 2 |
| 122732 | A 4 25700 | 1 H 15 |
| | A 4 25900 | 1 H 19 |
| 122740 | A 4 25700 | 1 H 15 |
| 122765 | A 4 14950 | 1 F 18 |
| | A 4 15000 | 1 F 20 |

| Part No. | Group No. | Microfiche Loc. |
|---|---|---|
| 122765 | A 4 15600 | 1 G 2 |
| | A 4 15610 | 1 G 4 |
| | A 4 25600 | 1 H 10 |
| 122802 | A 4 25700 | 1 H 15 |
| 123514 | A 4 10700 | 1 F 11 |
| | A 4 21200 | 1 H 2 |
| 123515 | A 4 10700 | 1 F 11 |
| | A 4 21200 | 1 H 2 |
| 123517 | A 4 10700 | 1 F 11 |
| | A 4 21200 | 1 H 2 |
| 123672 | A 4 10600 | 1 F 6 |
| | A 4 20610 | 1 G 12 |
| 123747 | A 4 25700 | 1 H 15 |
| | A 4 25900 | 1 H 19 |
| 123789 | A 4 10700 | 1 F 11 |
| | A 4 21200 | 1 H 2 |
| 123800 | A 4 14950 | 1 F 18 |
| | A 4 15000 | 1 F 21 |
| | A 4 15600 | 1 G 2 |
| | A 4 15610 | 1 G 4 |
| | A 4 25600 | 1 H 10 |
| 123830 | A 4 14950 | 1 F 18 |
| | A 4 15000 | 1 F 20 |
| | A 4 15600 | 1 G 2 |
| | A 4 21500 | 1 H 6 |
| | A 4 25600 | 1 H 10 |
| 123831 | A 4 25700 | 1 H 15 |
| | A 4 25900 | 1 H 19 |
| 123904 | A 4 10600 | 1 F 6 |
| | A 4 20610 | 1 G 12 |
| 124040 | A 4 25600 | 1 H 10 |
| 124041 | A 4 14950 | 1 F 18 |
| | A 4 15000 | 1 F 21 |
| | A 4 15600 | 1 G 2 |
| | A 4 15610 | 1 G 4 |
| 124179 | A 4 15610 | 1 G 4 |
| 124202 | A 4 25900 | 1 H 19 |
| 124325 | A 4 10600 | 1 F 6 |
| | A 4 10700 | 1 F 11 |
| | A 4 20610 | 1 G 12 |
| | A 4 21200 | 1 H 2 |
| 124435 | A 4 14950 | 1 F 18 |
| | A 4 15600 | 1 G 2 |
| | A 4 21500 | 1 H 6 |
| | A 4 25600 | 1 H 10 |
| 124436 | A 4 14950 | 1 F 18 |
| | A 4 15600 | 1 G 2 |
| 124439 | A 4 25600 | 1 H 10 |
| 124444 | A 4 15000 | 1 F 20 |
| | A 4 15610 | 1 G 4 |
| 124482 | A 7 15450 | 2 B 18 |
| 124483 | A 7 15450 | 2 B 18 |
| 124484 | A 7 15450 | 2 B 18 |
| 124573 | A 4 30115 | 1 I 2 |
| 124574 | A 4 30115 | 1 I 2 |
| 124575 | A 4 30115 | 1 I 2 |
| 124576 | A 4 30115 | 1 I 2 |
| 124577 | A 4 30115 | 1 I 2 |
| 124886 | A 4 14950 | 1 F 18 |
| | A 4 15600 | 1 G 2 |
| 124995 | A 4 15000 | 1 F 20 |
| 124997 | A 4 21500 | 1 H 6 |
| 125248 | A 4 20700 | 1 G 16 |
| 125567 | A 4 25700 | 1 H 15 |
| | A 4 25900 | 1 H 19 |
| 125568 | A 4 25900 | 1 H 19 |
| 125576 | A 4 14950 | 1 F 18 |
| | A 4 15600 | 1 G 2 |
| | A 4 15610 | 1 G 4 |
| | A 4 21500 | 1 H 6 |
| | A 4 25600 | 1 H 10 |
| 125577 | A 4 14950 | 1 F 18 |
| | A 4 15000 | 1 F 20 |
| | A 4 15600 | 1 G 2 |
| | A 4 15610 | 1 G 4 |

| Part No. | Group No. | Microfiche Loc. |
|---|---|---|
| 125577 | A 4 21500 | 1 H 6 |
| | A 4 25600 | 1 H 10 |
| 125578 | A 4 15000 | 1 F 20 |
| 125600 | A 4 14950 | 1 F 18 |
| | A 4 15600 | 1 G 2 |
| | A 4 21500 | 1 H 6 |
| | A 4 25600 | 1 H 10 |
| 125682 | A 4 10000 | 1 F 2 |
| 125769 | A 4 20700 | 1 G 16 |
| 126624 | A 4 25900 | 1 H 19 |
| 126894 | A 4 15000 | 1 F 20 |
| | A 4 15610 | 1 G 4 |
| | A 4 21500 | 1 H 6 |
| | A 4 25600 | 1 H 10 |
| 127107 | A 7 10150 | 2 A 22 |
| 127109 | A 4 10700 | 1 F 12 |
| | A 4 21200 | 1 H 2 |
| 127128 | A 4 21200 | 1 H 2 |
| 127398 | A 4 30115 | 1 I 2 |
| 127399 | A 4 30115 | 1 I 2 |
| 127819 | A 4 20700 | 1 G 16 |
| 127989 | A 4 14950 | 1 F 18 |
| | A 4 15000 | 1 F 21 |
| | A 4 15600 | 1 G 2 |
| | A 4 15610 | 1 G 4 |
| | A 4 21500 | 1 H 6 |
| | A 4 25600 | 1 H 10 |
| 127990 | A 4 15000 | 1 F 20 |
| 127991 | A 4 14950 | 1 F 18 |
| 127992 | A 4 21500 | 1 H 6 |
| 127993 | A 4 15610 | 1 G 4 |
| 127994 | A 4 15600 | 1 G 2 |
| 127995 | A 4 25600 | 1 H 10 |
| 128117 | A 4 10600 | 1 F 6 |
| | A 4 10700 | 1 F 11 |
| | A 4 20610 | 1 G 12 |
| | A 4 21200 | 1 H 2 |
| 128222 | A 4 25700 | 1 H 15 |
| | A 4 25900 | 1 H 19 |
| 128400 | A 4 25900 | 1 H 19 |
| 128628 | A 4 25900 | 1 H 19 |
| 128789 | A 4 25900 | 1 H 19 |
| 141675 | A 9 16050 | 2 D 10 |
| 142062 | A 9 16050 | 2 D 10 |
| 190856 | A 4 11000 | 1 F 16 |
| 190930 | A 4 21000 | 1 G 24 |
| 191242 | A 4 11000 | 1 F 16 |
| 191370 | A 4 20700 | 1 G 16 |
| 191474 | A 4 10700 | 1 F 11 |
| 191475 | A 4 10700 | 1 F 11 |
| 191799 | A 4 10600 | 1 F 6 |
| 191800 | A 4 10600 | 1 F 6 |
| 191801 | A 4 20610 | 1 G 12 |
| 192132 | A 4 21200 | 1 H 2 |
| 192544 | A 4 10000 | 1 F 2 |
| 192545 | A 4 10000 | 1 F 2 |
| 201413 | A 6 22010 | 1 L 10 |
| | A 6 23000 | 1 L 15 |
| 201497 | A 3 20100 | 1 E 24 |
| | A 9 20200 | 2 D 18 |
| 201566 | A 3 10000 | 1 D 17 |
| | A 3 10050 | 1 D 22 |
| 201951 | A 2 10050 | 1 C 18 |
| | A 2 10150 | 1 D 2 |
| | A 2 10200 | 1 D 8 |
| 202200 | A 3 13050 | 1 E 10 |
| | A 6 14000 | 1 K 11 |
| 203253 | A 6 24150 | 2 A 9 |
| 206770 | A 6 24050 | 1 L 20 |
| | A 6 24150 | 2 A 10 |
| 206864 | A 2 10050 | 1 C 18 |
| | A 2 10150 | 1 D 3 |
| | A 2 10200 | 1 D 8 |
| | A 3 10000 | 1 D 17 |
| | A 3 10050 | 1 D 22 |

| Part No. | Group No. | Microfiche Loc. |
|---|---|---|
| 206864 | A 6 24050 | 1 L 20 |
| | A 6 24150 | 2 A 9 |
| 207647 | A 2 10050 | 1 C 18 |
| | A 2 10150 | 1 D 2 |
| | A 2 10200 | 1 D 8 |
| | A 9 10060 | 2 D 2 |
| 207873 | A 2 10050 | 1 C 19 |
| | A 2 10150 | 1 D 4 |
| | A 2 10200 | 1 D 9 |
| | A 3 10000 | 1 D 17 |
| | A 3 10050 | 1 D 22 |
| | A 6 22010 | 1 L 10 |
| | A 6 23000 | 1 L 15 |
| 207878 | A 6 23000 | 1 L 16 |
| 208805 | A 7 10200 | 2 A 24 |
| 209313 | A 2 10050 | 1 C 19 |
| | A 2 10150 | 1 D 4 |
| | A 2 10200 | 1 D 9 |
| 209915 | A 1 15250 | 1 B 16 |
| | A 1 20125 | 1 B 20 |
| 209968 | A 6 18000 | 1 K 19 |
| 211433 | A 3 13050 | 1 E 10 |
| 211853 | A 6 24050 | 1 L 20 |
| | A 6 24150 | 2 A 10 |
| 214295 | A 3 10000 | 1 D 17 |
| | A 3 10050 | 1 D 22 |
| 214337 | E 2 70000 | 2 J 19 |
| 214596 | A 2 10050 | 1 C 19 |
| | A 2 10150 | 1 D 3 |
| | A 2 10200 | 1 D 9 |
| 214730 | A 2 10050 | 1 C 18 |
| | A 2 10150 | 1 D 3 |
| | A 2 10200 | 1 D 8 |
| 214920 | A 2 10050 | 1 C 19 |
| | A 2 10150 | 1 D 4 |
| 214923 | A 2 10050 | 1 C 19 |
| | A 2 10150 | 1 D 3 |
| 214924 | A 2 10050 | 1 C 19 |
| | A 2 10150 | 1 D 4 |
| | A 2 10200 | 1 D 9 |
| 214925 | A 2 10050 | 1 C 19 |
| | A 2 10150 | 1 D 4 |
| | A 2 10200 | 1 D 9 |
| 214928 | A 2 10050 | 1 C 18 |
| | A 2 10150 | 1 D 2 |
| | A 2 10200 | 1 D 8 |
| 214929 | A 2 10050 | 1 C 18 |
| | A 2 10150 | 1 D 2 |
| | A 2 10200 | 1 D 8 |
| 214930 | A 2 10050 | 1 C 18 |
| | A 2 10150 | 1 D 2 |
| | A 2 10200 | 1 D 8 |
| 214931 | A 2 10050 | 1 C 18 |
| | A 2 10150 | 1 D 2 |
| | A 2 10200 | 1 D 8 |
| 214936 | A 2 10050 | 1 C 18 |
| | A 2 10150 | 1 D 2 |
| | A 2 10200 | 1 D 8 |
| 214939 | A 2 10050 | 1 C 19 |
| 214941 | A 2 10050 | 1 C 19 |
| 214943 | A 2 25050 | 1 D 13 |
| 214946 | A 2 25050 | 1 D 13 |
| 214949 | A 2 25050 | 1 D 13 |
| 214951 | A 2 10050 | 1 C 18 |
| | A 2 10150 | 1 D 3 |
| | A 2 10200 | 1 D 8 |
| 214953 | A 2 10050 | 1 C 18 |
| | A 2 10150 | 1 D 3 |
| | A 2 10200 | 1 D 9 |
| 214954 | A 2 10050 | 1 C 18 |
| | A 2 10150 | 1 D 2 |
| | A 2 10200 | 1 D 8 |
| 214956 | A 2 10050 | 1 C 18 |
| | A 2 10150 | 1 D 2 |
| | A 2 10200 | 1 D 8 |
| 214958 | A 2 10200 | 1 D 9 |
| 214959 | A 2 10200 | 1 D 9 |
| 214961 | A 2 10050 | 1 C 18 |
| | A 2 10150 | 1 D 2 |
| | A 2 10200 | 1 D 8 |
| 214962 | A 9 10060 | 2 D 2 |
| 214979 | A 2 10050 | 1 C 18 |
| | A 2 10150 | 1 D 3 |
| | A 2 10200 | 1 D 8 |
| 214981 | A 2 10050 | 1 C 18 |
| | A 2 10150 | 1 D 2 |
| | A 2 10200 | 1 D 8 |
| 214983 | A 2 10050 | 1 C 18 |
| | A 2 10150 | 1 D 3 |
| | A 2 10200 | 1 D 9 |
| 214984 | A 2 10050 | 1 C 18 |
| | A 2 10150 | 1 D 3 |
| | A 2 10200 | 1 D 9 |
| 214985 | A 3 10000 | 1 D 18 |
| | A 3 10050 | 1 D 23 |
| 214988 | A 2 10050 | 1 C 19 |
| | A 2 10150 | 1 D 4 |
| | A 2 10200 | 1 D 9 |
| 215141 | A 3 10000 | 1 D 17 |
| | A 3 10050 | 1 D 22 |
| 215143 | A 3 10000 | 1 D 17 |
| | A 3 10050 | 1 D 22 |
| 215144 | A 3 10000 | 1 D 17 |
| | A 3 10050 | 1 D 22 |
| 215145 | A 3 10000 | 1 D 17 |
| | A 3 10050 | 1 D 22 |
| 215146 | A 3 10000 | 1 D 17 |
| | A 3 10050 | 1 D 22 |
| 215147 | A 3 13050 | 1 E 10 |
| 215149 | A 3 10000 | 1 D 18 |
| | A 3 10050 | 1 D 23 |
| 215150 | A 3 10050 | 1 D 23 |
| 215154 | A 3 10000 | 1 D 18 |
| | A 3 10050 | 1 D 23 |
| 215155 | A 3 10000 | 1 D 17 |
| | A 3 10050 | 1 D 22 |
| 215156 | A 3 10000 | 1 D 17 |
| | A 3 10050 | 1 D 22 |
| 215157 | A 3 10000 | 1 D 17 |
| | A 3 10050 | 1 D 22 |
| 215158 | A 3 10000 | 1 D 17 |
| | A 3 10050 | 1 D 22 |
| 215159 | A 7 30100 | 2 C 2 |
| 215160 | A 7 25000 | 2 B 22 |
| | A 7 30100 | 2 C 2 |
| 215162 | A 3 10000 | 1 D 17 |
| | A 3 10050 | 1 D 22 |
| 215163 | A 3 10000 | 1 D 17 |
| | A 3 10050 | 1 D 22 |
| 215164 | A 3 10000 | 1 D 17 |
| | A 3 10050 | 1 D 22 |
| 215166 | A 3 10000 | 1 D 17 |
| | A 3 10050 | 1 D 22 |
| | A 3 12000 | 1 E 6 |
| 215176 | A 3 11000 | 1 E 2 |
| | A 3 12000 | 1 E 6 |
| 215177 | A 3 11000 | 1 E 2 |
| | A 3 12000 | 1 E 6 |
| 215179 | A 3 11000 | 1 E 2 |
| | A 3 12000 | 1 E 6 |
| 215180 | A 3 11000 | 1 E 2 |
| 215182 | A 3 11000 | 1 E 2 |
| 215183 | A 3 11000 | 1 E 2 |
| | A 3 12000 | 1 E 6 |
| | A 6 24050 | 1 L 20 |
| | A 6 24150 | 2 A 9 |
| 215184 | A 3 12000 | 1 E 6 |
| 215188 | A 3 12000 | 1 E 6 |
| 215189 | A 3 12000 | 1 E 6 |
| 215190 | A 3 11000 | 1 E 2 |

| Part No. | Group No. | Microfiche Loc. |
|---|---|---|
| 215190 | A 3 12000 | 1 E 6 |
| | A 6 24050 | 1 L 20 |
| | A 6 24150 | 2 A 9 |
| 215191 | A 3 10000 | 1 D 18 |
| | A 3 10050 | 1 D 23 |
| 215194 | A 3 13050 | 1 E 10 |
| 215198 | A 3 10000 | 1 D 17 |
| | A 3 10050 | 1 D 22 |
| 215205 | A 3 10000 | 1 D 18 |
| | A 3 10050 | 1 D 23 |
| 215502 | A 8 10050 | 2 C 14 |
| | A 8 10110 | 2 C 18 |
| | A 8 10130 | 2 C 22 |
| | J 1 50000 | 3 F 5 |
| 215550 | A 3 10000 | 1 D 17 |
| | A 3 10050 | 1 D 22 |
| | A 7 30100 | 2 C 2 |
| 215551 | A 3 10000 | 1 D 18 |
| | A 3 10050 | 1 D 23 |
| 215663 | A 3 11000 | 1 E 2 |
| 215702 | A 2 10050 | 1 C 18 |
| | A 2 10150 | 1 D 2 |
| | A 2 10200 | 1 D 8 |
| | A 3 10000 | 1 D 17 |
| | A 3 10050 | 1 D 22 |
| 215757 | A 3 10000 | 1 D 18 |
| | A 3 10050 | 1 D 23 |
| 215909 | A 1 20125 | 1 B 20 |
| | A 2 10050 | 1 C 19 |
| | A 8 10050 | 2 C 14 |
| 216058 | A 3 10000 | 1 D 17 |
| | A 3 10050 | 1 D 22 |
| | A 6 24050 | 1 L 20 |
| | A 6 24150 | 2 A 9 |
| 216267 | A 6 14000 | 1 K 11 |
| 217420 | A 6 24050 | 1 L 20 |
| | A 6 24150 | 2 A 10 |
| 217657 | A 6 14000 | 1 K 11 |
| 217693 | A 6 22010 | 1 L 11 |
| | A 6 23000 | 1 L 16 |
| 217952 | A 3 10000 | 1 D 17 |
| | A 3 10050 | 1 D 22 |
| 218353 | A 3 10000 | 1 D 17 |
| | A 3 10050 | 1 D 22 |
| 218777 | A 6 22010 | 1 L 11 |
| | A 6 23000 | 1 L 16 |
| 219370 | A 3 10000 | 1 D 18 |
| | A 3 10050 | 1 D 23 |
| 219373 | A 3 10000 | 1 D 18 |
| | A 3 10050 | 1 D 23 |
| 220363 | A 3 13050 | 1 E 10 |
| 220725 | A 2 10050 | 1 C 19 |
| | A 2 10150 | 1 D 4 |
| | A 2 10200 | 1 D 9 |
| | A 6 23000 | 1 L 16 |
| 220818 | A 6 24050 | 1 L 20 |
| 220983 | A 2 25050 | 1 D 13 |
| 221391 | A 3 10000 | 1 D 17 |
| | A 3 10050 | 1 D 22 |
| 221653 | A 2 10050 | 1 C 18 |
| 222006 | A 2 10050 | 1 C 19 |
| | A 2 10150 | 1 D 4 |
| | A 2 10200 | 1 D 9 |
| 222031 | A 6 22010 | 1 L 11 |
| | A 6 23000 | 1 L 16 |
| 222041 | A 6 14000 | 1 K 11 |
| 222067 | A 6 24050 | 1 L 20 |
| | A 6 24150 | 2 A 9 |
| 222079 | A 2 10050 | 1 C 18 |
| | A 2 10150 | 1 D 3 |
| | A 2 10200 | 1 D 9 |
| 222312 | A 2 25050 | 1 D 13 |
| 222318 | A 2 25050 | 1 D 13 |
| 222418 | A 6 22010 | 1 L 10 |
| | A 6 23000 | 1 L 15 |
| 222684 | A 2 10050 | 1 C 19 |
| | A 2 10150 | 1 D 4 |
| 223084 | A 6 22010 | 1 L 10 |
| | A 6 23000 | 1 L 15 |
| 223085 | A 3 11000 | 1 E 2 |
| | A 3 12000 | 1 E 6 |
| 223124 | A 2 10050 | 1 C 19 |
| | A 2 10150 | 1 D 4 |
| | A 2 10200 | 1 D 9 |
| 223125 | A 2 10050 | 1 C 19 |
| | A 2 10150 | 1 D 4 |
| | A 2 10200 | 1 D 9 |
| 223222 | A 6 24150 | 2 A 10 |
| 223877 | A 6 24050 | 1 L 20 |
| | A 6 24150 | 2 A 9 |
| 223989 | A 6 23000 | 1 L 15 |
| 224009 | A 2 10050 | 1 C 18 |
| | A 2 10150 | 1 D 3 |
| | A 2 10200 | 1 D 8 |
| 224028 | A 4 10000 | 1 F 2 |
| | A 4 10600 | 1 F 6 |
| | A 4 11000 | 1 F 16 |
| | A 4 20610 | 1 G 12 |
| | A 4 21000 | 1 G 24 |
| 224039 | A 2 10050 | 1 C 18 |
| | A 2 10150 | 1 D 2 |
| | A 2 10200 | 1 D 8 |
| 224083 | A 6 24050 | 1 L 20 |
| | A 6 24150 | 2 A 9 |
| 224106 | B 3 10010 | 2 G 2 |
| | E 1 10010 | 2 I 2 |
| 224368 | A 2 25050 | 1 D 13 |
| 224369 | A 2 25050 | 1 D 13 |
| 224620 | A 3 13050 | 1 E 10 |
| 224771 | A 3 11000 | 1 E 2 |
| | A 3 12000 | 1 E 6 |
| | A 6 24050 | 1 L 20 |
| | A 6 24150 | 2 A 9 |
| 224772 | A 3 11000 | 1 E 2 |
| | A 3 12000 | 1 E 6 |
| | A 6 24050 | 1 L 20 |
| | A 6 24150 | 2 A 9 |
| 224774 | A 3 11000 | 1 E 2 |
| | A 3 12000 | 1 E 6 |
| | A 6 24050 | 1 L 20 |
| | A 6 24150 | 2 A 9 |
| 225076 | A 3 11000 | 1 E 2 |
| | A 3 12000 | 1 E 6 |
| 225077 | A 3 11000 | 1 E 2 |
| | A 3 12000 | 1 E 6 |
| 225079 | A 3 10000 | 1 D 18 |
| | A 3 10050 | 1 D 23 |
| 225313 | A 6 22010 | 1 L 10 |
| | A 6 23000 | 1 L 15 |
| 225602 | A 3 11000 | 1 E 2 |
| | A 3 12000 | 1 E 6 |
| 225603 | A 3 10000 | 1 D 17 |
| | A 3 10050 | 1 D 22 |
| | A 3 11000 | 1 E 2 |
| 225793 | A 6 22010 | 1 L 11 |
| | A 6 23000 | 1 L 16 |
| 225800 | A 6 22010 | 1 L 11 |
| | A 6 23000 | 1 L 16 |
| 225824 | A 3 10000 | 1 D 17 |
| | A 3 10050 | 1 D 22 |
| 225844 | A 6 24050 | 1 L 20 |
| | A 6 24150 | 2 A 10 |
| 225956 | A 6 24050 | 1 L 20 |
| | A 6 24150 | 2 A 9 |
| 227952 | A 3 12000 | 1 E 6 |
| 228068 | A 3 10000 | 1 D 17 |
| | A 3 10050 | 1 D 23 |
| 228069 | A 3 10000 | 1 D 18 |
| | A 3 10050 | 1 D 23 |
| 228943 | A 3 10000 | 1 D 17 |

| Part No. | Group No. | Microfiche Loc. |
|---|---|---|
| 228943 | A 3 10050 | 1 D 23 |
| 229006 | A 3 13050 | 1 E 10 |
| 229009 | A 3 13050 | 1 E 10 |
| 229010 | A 3 13050 | 1 E 10 |
| 229466 | A 3 13050 | 1 E 10 |
| 229566 | A 2 10150 | 1 D 3 |
| 229862 | A 6 24050 | 1 L 20 |
| 230067 | A 6 22010 | 1 L 11 |
| | A 6 23000 | 1 L 16 |
| 230822 | A 6 24050 | 1 L 20 |
| | A 6 24150 | 2 A 9 |
| 230829 | A 6 24050 | 1 L 20 |
| | A 6 24150 | 2 A 9 |
| 230851 | A 6 24050 | 1 L 20 |
| | A 6 24150 | 2 A 10 |
| 230857 | A 6 24050 | 1 L 20 |
| | A 6 24150 | 2 A 9 |
| 230911 | A 6 24050 | 1 L 20 |
| | A 6 24150 | 2 A 9 |
| 230965 | A 6 14000 | 1 K 11 |
| 231017 | A 6 22010 | 1 L 10 |
| | A 6 23000 | 1 L 15 |
| 231059 | A 6 24050 | 1 L 20 |
| | A 6 24150 | 2 A 9 |
| 231200 | A 6 14000 | 1 K 11 |
| 231231 | A 6 22010 | 1 L 10 |
| | A 6 23000 | 1 L 15 |
| 231258 | A 6 14000 | 1 K 11 |
| 231260 | A 6 24050 | 1 L 20 |
| | A 6 24150 | 2 A 9 |
| 231262 | A 6 24050 | 1 L 20 |
| | A 6 24150 | 2 A 9 |
| 231264 | A 6 24050 | 1 L 20 |
| | A 6 24150 | 2 A 9 |
| 231269 | A 6 24050 | 1 L 20 |
| 231270 | A 6 24050 | 1 L 20 |
| 231271 | A 6 24050 | 1 L 20 |
| 231274 | A 6 24050 | 1 L 20 |
| | A 6 24150 | 2 A 10 |
| 231275 | A 6 24050 | 1 L 20 |
| | A 6 24150 | 2 A 10 |
| 231276 | A 6 24050 | 1 L 20 |
| | A 6 24150 | 2 A 10 |
| 231277 | A 6 24050 | 1 L 20 |
| 231278 | A 6 24050 | 1 L 20 |
| | A 6 24150 | 2 A 10 |
| 231279 | A 6 24050 | 1 L 20 |
| | A 6 24150 | 2 A 10 |
| 231280 | A 6 24050 | 1 L 20 |
| 231281 | A 6 24050 | 1 L 20 |
| 231282 | A 6 24050 | 1 L 20 |
| 231283 | A 6 24050 | 1 L 20 |
| | A 6 24150 | 2 A 10 |
| 231284 | A 6 24050 | 1 L 20 |
| | A 6 24150 | 2 A 10 |
| 231285 | A 6 24050 | 1 L 20 |
| | A 6 24150 | 2 A 10 |
| 231286 | A 6 24050 | 1 L 20 |
| 231287 | A 6 24050 | 1 L 20 |
| 231288 | A 6 24050 | 1 L 21 |
| 231289 | A 6 22010 | 1 L 11 |
| 231290 | A 6 22010 | 1 L 11 |
| | A 6 23000 | 1 L 16 |
| 231292 | A 6 22010 | 1 L 11 |
| | A 6 23000 | 1 L 16 |
| 231293 | A 6 22010 | 1 L 11 |
| | A 6 23000 | 1 L 16 |
| 231294 | A 6 22010 | 1 L 11 |
| | A 6 23000 | 1 L 16 |
| 231300 | A 6 22010 | 1 L 10 |
| | A 6 23000 | 1 L 15 |
| 231303 | A 6 22010 | 1 L 10 |
| | A 6 23000 | 1 L 15 |
| 231308 | A 6 22010 | 1 L 10 |
| | A 6 23000 | 1 L 15 |

| Part No. | Group No. | Microfiche Loc. |
|---|---|---|
| 231310 | A 6 24050 | 1 L 21 |
| 231312 | A 6 14000 | 1 K 11 |
| 231313 | A 6 14000 | 1 K 11 |
| 231314 | A 6 14000 | 1 K 11 |
| 231315 | A 6 14000 | 1 K 11 |
| 231319 | A 6 14000 | 1 K 11 |
| 231320 | A 6 14000 | 1 K 11 |
| 231321 | A 6 14000 | 1 K 11 |
| 231322 | A 6 14000 | 1 K 11 |
| 231331 | A 6 24050 | 1 L 21 |
| 231332 | A 6 22010 | 1 L 10 |
| | A 6 23000 | 1 L 15 |
| 231333 | A 6 22010 | 1 L 10 |
| | A 6 23000 | 1 L 15 |
| 231336 | A 6 22010 | 1 L 10 |
| | A 6 23000 | 1 L 15 |
| 231338 | A 6 22010 | 1 L 10 |
| | A 6 23000 | 1 L 15 |
| 231342 | A 6 24050 | 1 L 21 |
| 231345 | A 6 24050 | 1 L 21 |
| 231385 | A 6 24050 | 1 L 21 |
| | A 6 24150 | 2 A 9 |
| 231386 | A 6 14000 | 1 K 11 |
| 231387 | A 6 14000 | 1 K 11 |
| 231389 | A 6 14000 | 1 K 11 |
| 231399 | A 6 22010 | 1 L 11 |
| | A 6 23000 | 1 L 16 |
| 231495 | A 6 22010 | 1 L 10 |
| | A 6 23000 | 1 L 15 |
| 231554 | A 2 10200 | 1 D 9 |
| 231743 | A 6 24050 | 1 L 21 |
| | A 6 24150 | 2 A 9 |
| 231744 | A 6 24050 | 1 L 21 |
| | A 6 24150 | 2 A 9 |
| 231811 | A 6 22010 | 1 L 10 |
| | A 6 23000 | 1 L 15 |
| 231831 | A 6 22010 | 1 L 10 |
| 231842 | A 6 22010 | 1 L 10 |
| | A 6 23000 | 1 L 16 |
| 231843 | A 6 22010 | 1 L 10 |
| | A 6 23000 | 1 L 16 |
| 231923 | A 6 24050 | 1 L 21 |
| 231924 | A 6 24050 | 1 L 21 |
| 232089 | A 6 24050 | 1 L 21 |
| | A 6 24150 | 2 A 9 |
| 232141 | A 6 24050 | 1 L 21 |
| | A 6 24150 | 2 A 9 |
| 232156 | A 6 24050 | 1 L 21 |
| 232157 | A 6 24050 | 1 L 21 |
| | A 6 24150 | 2 A 10 |
| 232158 | A 6 24050 | 1 L 21 |
| | A 6 24150 | 2 A 10 |
| 232159 | A 6 24050 | 1 L 21 |
| | A 6 24150 | 2 A 10 |
| 232160 | A 6 24050 | 1 L 21 |
| | A 6 24150 | 2 A 10 |
| 232239 | A 6 22010 | 1 L 10 |
| | A 6 23000 | 1 L 15 |
| 232240 | A 6 22010 | 1 L 10 |
| | A 6 23000 | 1 L 15 |
| 232241 | A 6 22010 | 1 L 10 |
| 232285 | A 6 22010 | 1 L 10 |
| | A 6 23000 | 1 L 15 |
| 232338 | A 6 22010 | 1 L 10 |
| | A 6 23000 | 1 L 15 |
| 232346 | A 6 24050 | 1 L 21 |
| | A 6 24150 | 2 A 9 |
| 232348 | A 6 24150 | 2 A 9 |
| 232349 | A 6 24150 | 2 A 10 |
| 232350 | A 6 24150 | 2 A 10 |
| 232351 | A 6 24150 | 2 A 10 |
| 232355 | A 6 24150 | 2 A 10 |
| 232356 | A 6 24150 | 2 A 10 |
| 232357 | A 6 24150 | 2 A 10 |
| 232362 | A 6 24150 | 2 A 10 |

| Part No. | Group No. | Microfiche Loc. |
|---|---|---|
| 232363 | A 6 24150 | 2 A 9 |
| 232365 | A 6 24150 | 2 A 10 |
| 232366 | A 6 24150 | 2 A 10 |
| 232367 | A 6 24150 | 2 A 10 |
| 232368 | A 6 23000 | 1 L 16 |
| 232370 | A 6 23000 | 1 L 15 |
| 232535 | A 2 10050 | 1 C 19 |
| | A 2 10150 | 1 D 4 |
| | A 2 10200 | 1 D 9 |
| 232628 | A 6 22010 | 1 L 10 |
| | A 6 23000 | 1 L 15 |
| 232635 | A 6 23000 | 1 L 15 |
| 232715 | A 6 24050 | 1 L 21 |
| | A 6 24150 | 2 A 10 |
| 232903 | A 6 22010 | 1 L 10 |
| | A 6 23000 | 1 L 15 |
| 232904 | A 6 22010 | 1 L 10 |
| | A 6 23000 | 1 L 15 |
| 232943 | A 6 22010 | 1 L 10 |
| | A 6 23000 | 1 L 15 |
| 232944 | A 6 22010 | 1 L 10 |
| | A 6 23000 | 1 L 15 |
| 232947 | A 6 22010 | 1 L 10 |
| | A 6 23000 | 1 L 15 |
| 232950 | A 6 22010 | 1 L 11 |
| 233089 | A 2 10050 | 1 C 19 |
| 233092 | A 2 10050 | 1 C 19 |
| 233194 | A 6 24150 | 2 A 10 |
| 233302 | A 6 24150 | 2 A 10 |
| 233361 | A 6 24150 | 2 A 9 |
| 233598 | A 2 10050 | 1 C 18 |
| | A 2 10150 | 1 D 2 |
| | A 2 10200 | 1 D 8 |
| | A 6 24050 | 1 L 21 |
| | A 6 24150 | 2 A 9 |
| 233850 | A 6 24150 | 2 A 10 |
| 233859 | A 6 23000 | 1 L 16 |
| 234001 | A 6 23000 | 1 L 15 |
| 234597 | A 6 22010 | 1 L 10 |
| | A 6 23000 | 1 L 15 |
| 234651 | A 6 14000 | 1 K 11 |
| 234761 | A 6 22010 | 1 L 10 |
| | A 6 23000 | 1 L 15 |
| 235593 | A 2 10150 | 1 D 4 |
| | A 2 10200 | 1 D 9 |
| 235784 | A 6 24050 | 1 L 21 |
| | A 6 24150 | 2 A 9 |
| 235961 | A 2 10150 | 1 D 2 |
| | A 2 10200 | 1 D 8 |
| | A 9 10060 | 2 D 2 |
| 236574 | A 6 23000 | 1 L 15 |
| 236936 | A 2 10150 | 1 D 4 |
| | A 2 10200 | 1 D 9 |
| 236937 | A 2 10150 | 1 D 4 |
| | A 2 10200 | 1 D 9 |
| 237405 | A 2 10050 | 1 C 18 |
| | A 2 10150 | 1 D 3 |
| | A 2 10200 | 1 D 9 |
| 238313 | A 3 11000 | 1 E 2 |
| | A 3 12000 | 1 E 6 |
| 239216 | A 6 22010 | 1 L 10 |
| | A 6 23000 | 1 L 15 |
| 239742 | A 2 10050 | 1 C 18 |
| | A 2 10150 | 1 D 3 |
| 239892 | A 3 10000 | 1 D 18 |
| | A 3 10050 | 1 D 23 |
| | A 3 13050 | 1 E 10 |
| 240318 | A 2 10150 | 1 D 4 |
| | A 2 10200 | 1 D 9 |
| 240467 | A 2 10200 | 1 D 9 |
| 242873 | A 6 24050 | 1 L 20 |
| | A 6 24150 | 2 A 9 |
| 282475 | A 3 10000 | 1 D 17 |
| 282731 | A 2 10050 | 1 C 18 |
| 284053 | A 2 10200 | 1 D 8 |
| 284106 | A 3 10050 | 1 D 22 |
| 284250 | A 6 23000 | 1 L 15 |
| 286288 | A 2 10150 | 1 D 2 |
| 300225 | A 10 12000 | 2 E 2 |
| | E 2 70000 | 2 J 19 |
| 302568 | A 7 15150 | 2 B 6 |
| | A 7 15200 | 2 B 8 |
| | A 7 15300 | 2 B 12 |
| | A 7 15350 | 2 B 14 |
| | A 7 15400 | 2 B 16 |
| | A 7 15450 | 2 B 18 |
| | B 4 10050 | 2 G 6 |
| | B 4 10065 | 2 G 8 |
| | B 4 10070 | 2 G 10 |
| | B 4 10130 | 2 G 14 |
| 302712 | E 2 70000 | 2 J 19 |
| 331196 | A 9 14000 | 2 D 6 |
| 356622 | D 1 10040 | 2 H 12 |
| | D 1 10090 | 2 H 14 |
| 364199 | A 1 10305 | 1 A 9 |
| | A 1 10320 | 1 A 13 |
| | A 1 10330 | 1 A 15 |
| | A 1 10600 | 1 B 2 |
| 450230 | A 2 10050 | 1 C 18 |
| | A 2 10150 | 1 D 2 |
| | A 2 10200 | 1 D 8 |
| 505384 | F 2 92000 | 3 B 14 |
| 507068 | A 1 20150 | 1 B 24 |
| | A 1 20200 | 1 C 2 |
| 507815 | F 2 92000 | 3 B 14 |
| 509772 | A 3 20050 | 1 E 22 |
| | A 6 11010 | 1 K 2 |
| | A 9 20100 | 2 D 14 |
| | A 9 20200 | 2 D 18 |
| | A 10 20150 | 2 E 6 |
| 511512 | A 1 25100 | 1 C 6 |
| 518233 | A 1 10500 | 1 A 19 |
| | A 1 10550 | 1 A 21 |
| | A 1 10575 | 1 A 23 |
| 518275 | A 1 10550 | 1 A 21 |
| | A 1 10575 | 1 A 23 |
| 521429 | F 2 92000 | 3 B 14 |
| 522633 | A 1 20150 | 1 B 24 |
| 524657 | D 1 10040 | 2 H 12 |
| 524703 | A 1 15060 | 1 B 6 |
| | A 1 15150 | 1 B 10 |
| | A 1 15200 | 1 B 12 |
| | A 1 15250 | 1 B 16 |
| 525293 | A 9 10060 | 2 D 2 |
| | D 1 10040 | 2 H 12 |
| | D 1 10090 | 2 H 14 |
| 526676 | A 8 10050 | 2 C 14 |
| | A 8 10110 | 2 C 18 |
| | A 8 10130 | 2 C 22 |
| 527096 | A 1 20125 | 1 B 20 |
| 527170 | A 1 25200 | 1 C 10 |
| 531905 | D 1 20080 | 2 H 18 |
| | D 1 20100 | 2 H 22 |
| 532917 | E 1 10020 | 2 I 4 |
| | E 1 10040 | 2 I 6 |
| | E 1 12000 | 2 I 12 |
| 533311 | A 8 10110 | 2 C 18 |
| | A 8 10130 | 2 C 22 |
| 535625 | A 9 10060 | 2 D 2 |
| 536792 | A 8 10050 | 2 C 14 |
| 538090 | A 8 10050 | 2 C 14 |
| 539048 | F 2 92000 | 3 B 14 |
| 539837 | A 3 15050 | 1 E 14 |
| | A 3 15150 | 1 E 18 |
| 540102 | A 1 20200 | 1 C 2 |
| 544512 | A 7 25000 | 2 B 22 |
| 544998 | A 7 25000 | 2 B 22 |
| | A 7 30100 | 2 C 2 |
| 545005 | A 7 25000 | 2 B 22 |
| | A 7 30100 | 2 C 2 |

| Part No. | Group No. | Microfiche Loc. |
|---|---|---|
| 545204 | A 8 10050 | 2 C 14 |
| 546842 | A 8 10050 | 2 C 14 |
| | A 8 10110 | 2 C 18 |
| | A 8 10130 | 2 C 22 |
| 547013 | A 1 25200 | 1 C 10 |
| 547237 | B 4 10050 | 2 G 6 |
| | B 4 10065 | 2 G 8 |
| | B 4 10070 | 2 G 10 |
| 547529 | F 2 90000 | 3 A 23 |
| | F 2 90050 | 3 B 2 |
| | F 2 90450 | 3 B 6 |
| | F 2 90500 | 3 B 10 |
| 550301 | A 7 15100 | 2 B 2 |
| | A 7 15150 | 2 B 6 |
| | A 7 15200 | 2 B 8 |
| | A 7 15300 | 2 B 12 |
| | A 7 15350 | 2 B 14 |
| | A 7 15400 | 2 B 16 |
| | A 7 15450 | 2 B 18 |
| 550401 | A 7 15100 | 2 B 2 |
| | A 7 15150 | 2 B 6 |
| | A 7 15200 | 2 B 8 |
| 551090 | D 1 20080 | 2 H 18 |
| | D 1 20100 | 2 H 22 |
| 551251 | F 1 20350 | 2 K 18 |
| 551323 | F 2 51200 | 2 L 23 |
| 551530 | F 2 51080 | 2 L 19 |
| 551660 | A 1 25200 | 1 C 10 |
| 551835 | F 2 96650 | 3 C 12 |
| | F 2 96700 | 3 C 14 |
| 551888 | A 8 10050 | 2 C 14 |
| 552377 | A 7 15100 | 2 B 2 |
| | A 7 15150 | 2 B 6 |
| | A 7 15200 | 2 B 8 |
| | A 7 15300 | 2 B 12 |
| | A 7 15350 | 2 B 14 |
| | A 7 15450 | 2 B 18 |
| 552914 | A 7 30100 | 2 C 2 |
| | A 9 14000 | 2 D 6 |
| 553896 | F 2 90000 | 3 A 23 |
| 557527 | J 1 20000 | 3 F 3 |
| 560706 | H 1 10050 | 3 E 6 |
| 561912 | A 10 20150 | 2 E 6 |
| 562783 | E 1 10010 | 2 I 2 |
| | E 1 10020 | 2 I 4 |
| | E 1 10040 | 2 I 6 |
| | E 1 12000 | 2 I 12 |
| 563377 | E 1 13050 | 2 I 18 |
| 565389 | A 3 20100 | 1 E 24 |
| 569739 | A 1 10305 | 1 A 9 |
| | A 1 10320 | 1 A 13 |
| | A 1 10330 | 1 A 15 |
| | A 1 10600 | 1 B 2 |
| 571000 | A 8 10130 | 2 C 22 |
| 573548 | B 4 10050 | 2 G 6 |
| | B 4 10065 | 2 G 8 |
| | B 4 10070 | 2 G 10 |
| | F 2 51250 | 3 A 9 |
| 574290 | A 8 10050 | 2 C 14 |
| | A 8 10110 | 2 C 18 |
| | A 8 10130 | 2 C 22 |
| 583210 | A 9 10060 | 2 D 2 |
| 583454 | F 2 90050 | 3 B 2 |
| | F 2 90500 | 3 B 10 |
| 583573 | A 8 10050 | 2 C 14 |
| | A 8 10110 | 2 C 18 |
| 584501 | A 1 10305 | 1 A 9 |
| | A 1 10320 | 1 A 13 |
| | A 1 10330 | 1 A 15 |
| | A 1 10600 | 1 B 2 |
| 585596 | A 3 20050 | 1 E 22 |
| 586452 | B 1 10045 | 2 E 12 |
| | B 1 10070 | 2 E 14 |
| | B 3 10010 | 2 G 2 |
| | B 5 10045 | 2 G 18 |

| Part No. | Group No. | Microfiche Loc. |
|---|---|---|
| 586452 | B 6 10000 | 2 G 22 |
| | B 6 10020 | 2 H 2 |
| | E 1 10020 | 2 I 4 |
| | E 1 10040 | 2 I 6 |
| | E 1 12000 | 2 I 12 |
| | E 1 13000 | 2 I 14 |
| | E 1 13050 | 2 I 18 |
| 587613 | D 1 10040 | 2 H 12 |
| | D 1 10090 | 2 H 14 |
| 600007 | A 3 20050 | 1 E 22 |
| | A 3 20100 | 1 E 24 |
| 600259 | B 4 10050 | 2 G 6 |
| | B 4 10065 | 2 G 8 |
| | B 4 10070 | 2 G 10 |
| | F 2 51250 | 3 A 9 |
| 611074 | F 2 90000 | 3 A 23 |
| | F 2 90050 | 3 B 2 |
| 613750 | A 7 10000 | 2 A 14 |
| | A 7 10050 | 2 A 16 |
| | A 7 15100 | 2 B 2 |
| | A 7 15150 | 2 B 6 |
| | A 7 15200 | 2 B 8 |
| | A 7 15300 | 2 B 12 |
| | A 7 15350 | 2 B 14 |
| | A 7 15400 | 2 B 16 |
| | A 7 15450 | 2 B 18 |
| 616775 | A 7 15150 | 2 B 6 |
| | A 7 15200 | 2 B 8 |
| | A 7 15300 | 2 B 12 |
| | A 7 15350 | 2 B 14 |
| | A 7 15400 | 2 B 16 |
| | A 7 15450 | 2 B 18 |
| | B 4 10050 | 2 G 6 |
| | B 4 10065 | 2 G 8 |
| | B 4 10070 | 2 G 10 |
| | B 4 10130 | 2 G 14 |
| 616781 | A 1 25200 | 1 C 10 |
| 616795 | A 3 20050 | 1 E 22 |
| 616796 | A 1 10305 | 1 A 9 |
| | A 1 10320 | 1 A 13 |
| | A 1 10330 | 1 A 15 |
| | A 1 10600 | 1 B 2 |
| 616802 | D 1 10090 | 2 H 14 |
| 616848 | A 3 11000 | 1 E 2 |
| | A 3 12000 | 1 E 6 |
| 619018 | A 1 10500 | 1 A 19 |
| | A 1 10550 | 1 A 21 |
| | A 1 10575 | 1 A 23 |
| | A 1 10600 | 1 B 2 |
| | D 1 20080 | 2 H 18 |
| | D 1 20100 | 2 H 22 |
| 619019 | A 7 25000 | 2 B 22 |
| 619021 | F 2 92000 | 3 B 14 |
| 619023 | A 2 10050 | 1 C 19 |
| | A 2 10150 | 1 D 4 |
| | A 2 10200 | 1 D 9 |
| 619024 | A 7 30100 | 2 C 2 |
| | C 1 10040 | 2 H 6 |
| 619025 | A 2 10050 | 1 C 19 |
| | A 2 10150 | 1 D 3 |
| | A 2 10200 | 1 D 9 |
| 619027 | B 4 10130 | 2 G 14 |
| 619032 | A 7 15300 | 2 B 12 |
| | A 7 15450 | 2 B 18 |
| 620235 | A 7 15100 | 2 B 2 |
| | A 7 15150 | 2 B 6 |
| | A 7 15200 | 2 B 8 |
| | A 7 15300 | 2 B 12 |
| | A 7 15350 | 2 B 14 |
| | A 7 15400 | 2 B 16 |
| 620238 | A 7 15100 | 2 B 2 |
| | A 7 15150 | 2 B 6 |
| | A 7 15200 | 2 B 8 |
| | A 7 15300 | 2 B 12 |
| | A 7 15350 | 2 B 14 |

| Part No. | Group No. | Microfiche Loc. |
|---|---|---|
| 620238 | A 7 15400 | 2 B 16 |
| | A 7 15450 | 2 B 18 |
| 626787 | F 2 40050 | 2 L 8 |
| 635373 | A 7 25000 | 2 B 22 |
| 636260 | F 2 51080 | 2 L 19 |
| | F 2 51200 | 2 L 23 |
| | F 2 51250 | 3 A 9 |
| 641297 | A 7 10100 | 2 A 18 |
| 645092 | A 7 25000 | 2 B 22 |
| 652734 | A 9 14000 | 2 D 6 |
| 652764 | F 1 20050 | 2 K 14 |
| | F 2 51200 | 2 L 23 |
| 654047 | A 6 20000 | 1 L 2 |
| 654144 | A 4 25700 | 1 H 15 |
| | A 4 25900 | 1 H 19 |
| 654156 | A 6 20000 | 1 L 2 |
| 654613 | A 3 11000 | 1 E 2 |
| | A 3 12000 | 1 E 6 |
| | A 6 24050 | 1 L 21 |
| | A 6 24150 | 2 A 9 |
| 656444 | A 9 14000 | 2 D 6 |
| 656532 | A 10 10030 | 2 D 22 |
| 658102 | B 1 10070 | 2 E 14 |
| 658487 | F 2 51080 | 2 L 19 |
| | F 2 51250 | 3 A 9 |
| 658978 | A 6 20000 | 1 L 2 |
| 658985 | A 4 10000 | 1 F 2 |
| | A 4 11000 | 1 F 16 |
| | A 4 21000 | 1 G 24 |
| 658988 | A 4 25700 | 1 H 15 |
| | A 4 25900 | 1 H 19 |
| 659065 | A 2 10050 | 1 C 19 |
| | A 2 10150 | 1 D 4 |
| | A 2 10200 | 1 D 9 |
| | A 3 11000 | 1 E 2 |
| | A 3 12000 | 1 E 6 |
| 660178 | A 2 25050 | 1 D 13 |
| 661415 | A 7 10150 | 2 A 22 |
| 661564 | A 9 10060 | 2 D 2 |
| 661570 | A 10 12000 | 2 E 2 |
| 661671 | A 6 18000 | 1 K 19 |
| | A 6 20000 | 1 L 2 |
| 661862 | B 4 10050 | 2 G 6 |
| | B 4 10065 | 2 G 8 |
| | B 4 10070 | 2 G 10 |
| | F 2 95050 | 3 B 19 |
| 661978 | E 2 70000 | 2 J 19 |
| 663792 | E 2 30100 | 2 J 3 |
| 664140 | A 6 14000 | 1 K 11 |
| 664174 | A 3 20100 | 1 E 24 |
| 664403 | A 1 15150 | 1 B 10 |
| | A 1 15200 | 1 B 12 |
| 664404 | A 1 15150 | 1 B 10 |
| 664423 | B 4 10050 | 2 G 6 |
| | C 1 10040 | 2 H 6 |
| | F 1 10240 | 2 K 6 |
| | F 2 92000 | 3 B 14 |
| 664424 | A 1 15150 | 1 B 10 |
| | A 1 15200 | 1 B 12 |
| 664427 | A 1 15150 | 1 B 10 |
| | A 1 15200 | 1 B 12 |
| 664871 | A 1 20150 | 1 B 24 |
| | D 1 10040 | 2 H 12 |
| | D 1 10090 | 2 H 14 |
| 666542 | A 2 10050 | 1 C 19 |
| | A 2 10150 | 1 D 4 |
| | A 2 10200 | 1 D 9 |
| | A 7 10100 | 2 A 18 |
| 666838 | A 1 10305 | 1 A 9 |
| | A 1 10320 | 1 A 13 |
| | A 1 10330 | 1 A 15 |
| | A 1 10550 | 1 A 21 |
| | A 1 10575 | 1 A 23 |
| | A 1 10600 | 1 B 2 |
| 666850 | A 1 10600 | 1 B 2 |

| Part No. | Group No. | Microfiche Loc. |
|---|---|---|
| 666857 | A 1 10600 | 1 B 2 |
| 666863 | A 1 10305 | 1 A 9 |
| | A 1 10320 | 1 A 13 |
| | A 1 10330 | 1 A 15 |
| | A 1 10550 | 1 A 21 |
| | A 1 10575 | 1 A 23 |
| | A 1 10600 | 1 B 2 |
| 667275 | A 4 25700 | 1 H 15 |
| | A 4 25900 | 1 H 19 |
| 667276 | A 4 25700 | 1 H 15 |
| | A 4 25900 | 1 H 19 |
| 667277 | A 4 14950 | 1 F 18 |
| | A 4 15000 | 1 F 20 |
| | A 4 15600 | 1 G 2 |
| | A 4 15610 | 1 G 4 |
| | A 4 21500 | 1 H 6 |
| | A 4 25600 | 1 H 10 |
| | A 4 25700 | 1 H 15 |
| | A 4 25900 | 1 H 19 |
| 667278 | A 4 14950 | 1 F 18 |
| | A 4 15000 | 1 F 20 |
| | A 4 15600 | 1 G 2 |
| | A 4 15610 | 1 G 4 |
| | A 4 21500 | 1 H 6 |
| | A 4 25600 | 1 H 10 |
| | A 4 25700 | 1 H 15 |
| | A 4 25900 | 1 H 19 |
| 667466 | A 4 25700 | 1 H 15 |
| | A 4 25900 | 1 H 19 |
| 668553 | A 4 10600 | 1 F 6 |
| | A 4 20610 | 1 G 12 |
| 672004 | A 4 10600 | 1 F 6 |
| | A 4 10700 | 1 F 11 |
| | A 4 20610 | 1 G 12 |
| | A 4 21200 | 1 H 2 |
| 672005 | A 4 10600 | 1 F 6 |
| | A 4 10700 | 1 F 11 |
| | A 4 20610 | 1 G 12 |
| | A 4 21200 | 1 H 2 |
| 672181 | A 4 10000 | 1 F 2 |
| | A 4 11000 | 1 F 16 |
| | A 4 21000 | 1 G 24 |
| 672182 | A 4 10000 | 1 F 2 |
| | A 4 11000 | 1 F 16 |
| | A 4 21000 | 1 G 24 |
| 672554 | A 10 10030 | 2 D 22 |
| 672907 | A 4 30115 | 1 I 2 |
| 675227 | A 3 20100 | 1 E 24 |
| | A 6 11010 | 1 K 3 |
| | A 7 15100 | 2 B 2 |
| | A 7 15150 | 2 B 6 |
| | A 7 15200 | 2 B 8 |
| | A 7 15350 | 2 B 14 |
| | A 7 15400 | 2 B 16 |
| | A 7 15450 | 2 B 18 |
| | A 9 20200 | 2 D 18 |
| | A 10 20150 | 2 E 6 |
| 675248 | A 4 14950 | 1 F 18 |
| | A 4 15000 | 1 F 20 |
| | A 4 15600 | 1 G 2 |
| | A 4 15610 | 1 G 4 |
| | A 4 21500 | 1 H 6 |
| | A 4 25600 | 1 H 10 |
| 675249 | A 4 14950 | 1 F 18 |
| | A 4 15000 | 1 F 20 |
| | A 4 15600 | 1 G 2 |
| | A 4 15610 | 1 G 4 |
| | A 4 21500 | 1 H 6 |
| | A 4 25600 | 1 H 11 |
| 675257 | A 4 14950 | 1 F 18 |
| | A 4 15000 | 1 F 21 |
| | A 4 15600 | 1 G 2 |
| | A 4 15610 | 1 G 4 |
| | A 4 21500 | 1 H 6 |
| | A 4 25600 | 1 H 11 |

| Part No. | Group No. | Microfiche Loc. |
|---|---|---|
| 675257 | A 6 20000 | 1 L 2 |
| 675261 | A 4 10600 | 1 F 6 |
| | A 4 20610 | 1 G 12 |
| 675536 | A 4 14950 | 1 F 18 |
| | A 4 15000 | 1 F 20 |
| | A 4 15600 | 1 G 2 |
| | A 4 15610 | 1 G 4 |
| | A 4 21500 | 1 H 6 |
| | A 4 25600 | 1 H 11 |
| 675544 | A 3 10000 | 1 D 18 |
| | A 3 10050 | 1 D 23 |
| 675548 | A 3 10000 | 1 D 18 |
| | A 3 10050 | 1 D 23 |
| 690279 | A 8 10050 | 2 C 14 |
| | A 8 10110 | 2 C 18 |
| | A 8 10130 | 2 C 22 |
| 692722 | A 7 15100 | 2 B 2 |
| | A 7 15150 | 2 B 6 |
| | A 7 15200 | 2 B 8 |
| | A 7 15300 | 2 B 12 |
| | A 7 15350 | 2 B 14 |
| | A 7 15400 | 2 B 16 |
| | A 7 15450 | 2 B 18 |
| 695317 | F 2 90000 | 3 A 23 |
| 695343 | F 1 20050 | 2 K 14 |
| | F 2 51200 | 2 L 23 |
| 696073 | B 4 10050 | 2 G 6 |
| | B 4 10065 | 2 G 8 |
| | B 4 10070 | 2 G 10 |
| | B 4 10130 | 2 G 14 |
| | F 2 95050 | 3 B 19 |
| 699005 | A 7 10000 | 2 A 14 |
| | A 7 10050 | 2 A 16 |
| 710288 | A 4 14950 | 1 F 18 |
| | A 4 15000 | 1 F 21 |
| | A 4 15600 | 1 G 2 |
| | A 4 15610 | 1 G 4 |
| | A 4 21500 | 1 H 6 |
| | A 4 25600 | 1 H 11 |
| 710749 | A 6 21050 | 1 L 6 |
| 710818 | A 3 20100 | 1 E 24 |
| 710852 | A 3 20100 | 1 E 24 |
| 711022 | A 6 24050 | 1 L 21 |
| | E 1 10010 | 2 I 2 |
| 711161 | A 6 22010 | 1 L 10 |
| | A 6 23000 | 1 L 15 |
| 711178 | A 6 22010 | 1 L 11 |
| | A 6 23000 | 1 L 16 |
| 711298 | A 2 10050 | 1 C 18 |
| | A 2 10150 | 1 D 2 |
| | A 2 10200 | 1 D 8 |
| 713008 | A 3 20100 | 1 E 24 |
| 713186 | A 2 10050 | 1 C 18 |
| | A 2 10150 | 1 D 2 |
| | A 2 10200 | 1 D 8 |
| 713513 | E 1 13050 | 2 I 18 |
| 713678 | E 1 10020 | 2 I 4 |
| | E 1 10040 | 2 I 6 |
| | E 1 12000 | 2 I 12 |
| 713870 | B 1 20175 | 2 F 6 |
| 713997 | E 2 70000 | 2 J 19 |
| 716464 | A 6 11010 | 1 K 2 |
| | A 8 10050 | 2 C 14 |
| | A 8 10130 | 2 C 22 |
| 730149 | A 10 10030 | 2 D 22 |
| 730396 | E 2 30100 | 2 J 2 |
| 730963 | E 1 13050 | 2 I 18 |
| 731135 | A 1 15150 | 1 B 10 |
| | A 1 15200 | 1 B 12 |
| 731160 | A 6 24050 | 1 L 21 |
| | A 6 24150 | 2 A 9 |
| 731288 | A 6 24050 | 1 L 21 |
| 731742 | A 6 21050 | 1 L 6 |
| 731793 | A 10 10030 | 2 D 22 |
| 731900 | A 10 10030 | 2 D 22 |
| 733622 | B 4 10130 | 2 G 14 |
| 742262 | A 4 10700 | 1 F 11 |
| | A 4 20700 | 1 G 16 |
| | A 4 21200 | 1 H 2 |
| 742263 | A 4 10700 | 1 F 12 |
| | A 4 20700 | 1 G 16 |
| | A 4 21200 | 1 H 2 |
| 743035 | A 2 10050 | 1 C 19 |
| | A 2 10150 | 1 D 3 |
| | A 2 10200 | 1 D 9 |
| 743200 | B 4 10050 | 2 G 6 |
| | B 4 10065 | 2 G 8 |
| | B 4 10070 | 2 G 10 |
| | B 4 10130 | 2 G 14 |
| | F 2 95050 | 3 B 19 |
| 743208 | F 2 95050 | 3 B 19 |
| 743439 | A 6 24050 | 1 L 21 |
| | A 6 24150 | 2 A 9 |
| 754019 | F 2 51080 | 2 L 19 |
| | F 2 51200 | 2 L 23 |
| | F 2 51250 | 3 A 9 |
| 755054 | A 10 12000 | 2 E 2 |
| 755055 | A 10 10030 | 2 D 22 |
| 755557 | A 6 20000 | 1 L 2 |
| 756833 | A 1 10550 | 1 A 21 |
| | A 1 10575 | 1 A 23 |
| 756853 | A 1 10305 | 1 A 9 |
| | A 1 10320 | 1 A 13 |
| | A 1 10330 | 1 A 15 |
| | A 1 10500 | 1 A 19 |
| | A 1 10550 | 1 A 21 |
| | A 1 10575 | 1 A 23 |
| | A 1 10600 | 1 B 2 |
| 763185 | A 6 21050 | 1 L 6 |
| 774024 | A 4 20700 | 1 G 16 |
| 774143 | A 9 14000 | 2 D 6 |
| 774433 | A 10 12000 | 2 E 2 |
| 774623 | A 6 22010 | 1 L 11 |
| | A 6 23000 | 1 L 16 |
| 784431 | E 1 13050 | 2 I 18 |
| 784433 | A 6 14000 | 1 K 11 |
| 784562 | A 6 24050 | 1 L 21 |
| 784568 | E 1 13000 | 2 I 14 |
| 784663 | A 1 10305 | 1 A 9 |
| | A 1 10320 | 1 A 13 |
| | A 1 10330 | 1 A 15 |
| | A 1 10550 | 1 A 21 |
| | A 1 10575 | 1 A 23 |
| | A 1 10600 | 1 B 2 |
| | A 9 10060 | 2 D 2 |
| | A 9 14000 | 2 D 6 |
| 784950 | F 2 50060 | 2 L 12 |
| | F 2 50105 | 2 L 15 |
| 791837 | A 9 16050 | 2 D 10 |
| 791949 | F 1 10020 | 2 J 24 |
| 792231 | A 1 10500 | 1 A 19 |
| | A 1 10550 | 1 A 21 |
| | A 1 10575 | 1 A 23 |
| | A 1 10600 | 1 B 2 |
| 793742 | A 6 11010 | 1 K 2 |
| 798781 | A 9 16050 | 2 D 10 |
| 799408 | A 4 10000 | 1 F 2 |
| | A 4 11000 | 1 F 16 |
| | A 4 21000 | 1 G 24 |
| 799564 | F 2 90450 | 3 B 6 |
| 799565 | F 2 90000 | 3 A 23 |
| | F 2 90050 | 3 B 2 |
| 799595 | A 3 12000 | 1 E 6 |
| 799723 | A 6 20000 | 1 L 2 |
| 801192 | A 7 25000 | 2 B 22 |
| | A 7 30100 | 2 C 2 |
| 801193 | A 7 25000 | 2 B 22 |
| | A 7 30100 | 2 C 2 |
| 801213 | A 7 25000 | 2 B 22 |
| | A 7 30100 | 2 C 2 |

| Part No. | Group No. | Microfiche Loc. |
|---|---|---|
| 801214 | A 7 25000 | 2 B 22 |
| | A 7 30100 | 2 C 2 |
| 801215 | A 7 25000 | 2 B 22 |
| | A 7 30100 | 2 C 2 |
| 801216 | A 7 25000 | 2 B 22 |
| | A 7 30100 | 2 C 2 |
| 801217 | A 7 25000 | 2 B 22 |
| | A 7 30100 | 2 C 2 |
| 801363 | A 3 10000 | 1 D 17 |
| | A 3 10050 | 1 D 22 |
| 801524 | A 2 10050 | 1 C 19 |
| | A 2 10150 | 1 D 4 |
| | A 2 10200 | 1 D 9 |
| 801607 | A 2 10050 | 1 C 19 |
| | A 2 10150 | 1 D 3 |
| 801608 | A 2 10200 | 1 D 9 |
| 801767 | A 6 22010 | 1 L 10 |
| 801984 | A 2 10150 | 1 D 3 |
| | A 2 10200 | 1 D 8 |
| 802003 | A 2 10150 | 1 D 4 |
| 802164 | A 6 24050 | 1 L 20 |
| | A 6 24150 | 2 A 9 |
| 815040 | A 4 14950 | 1 F 18 |
| | A 4 15000 | 1 F 20 |
| | A 4 15600 | 1 G 2 |
| | A 4 15610 | 1 G 4 |
| | A 4 21500 | 1 H 6 |
| 815172 | A 4 25900 | 1 H 19 |
| 815195 | A 4 25700 | 1 H 15 |
| 815202 | A 4 21500 | 1 H 6 |
| 815204 | A 4 14950 | 1 F 18 |
| | A 4 15000 | 1 F 20 |
| 815769 | A 4 25700 | 1 H 15 |
| | A 4 25900 | 1 H 19 |
| 815784 | A 4 15000 | 1 F 20 |
| 816090 | A 4 30100 | 1 H 23 |
| 816092 | A 4 30100 | 1 H 23 |
| 816098 | A 4 20610 | 1 G 12 |
| | A 4 21200 | 1 H 2 |
| 816099 | A 4 15000 | 1 F 20 |
| | A 4 15610 | 1 G 4 |
| 840473 | A 7 10150 | 2 A 22 |
| 840474 | A 7 10150 | 2 A 22 |
| 840478 | A 7 10150 | 2 A 22 |
| 841036 | A 4 10600 | 1 F 6 |
| | A 4 10700 | 1 F 11 |
| 841037 | A 4 20610 | 1 G 12 |
| | A 4 21200 | 1 H 2 |
| 853847 | F 2 50060 | 2 L 12 |
| | F 2 50105 | 2 L 15 |
| 854915 | A 7 15450 | 2 B 18 |
| 857944 | A 7 15400 | 2 B 16 |
| 860205 | A 7 15100 | 2 B 2 |
| | A 7 15150 | 2 B 6 |
| | A 7 15200 | 2 B 8 |
| 861356 | A 7 10000 | 2 A 14 |
| | A 7 10050 | 2 A 16 |
| 861692 | A 7 15400 | 2 B 16 |
| 862652 | A 7 25000 | 2 B 22 |
| | A 7 30100 | 2 C 2 |
| 862653 | A 7 25000 | 2 B 22 |
| | A 7 30100 | 2 C 2 |
| 862655 | A 7 25000 | 2 B 22 |
| | A 7 30100 | 2 C 2 |
| 862656 | A 7 25000 | 2 B 22 |
| | A 7 30100 | 2 C 2 |
| 862738 | A 7 25000 | 2 B 22 |
| | A 7 30100 | 2 C 2 |
| 866348 | A 7 25000 | 2 B 22 |
| | A 7 30100 | 2 C 2 |
| 866349 | A 7 25000 | 2 B 22 |
| 868586 | A 7 15100 | 2 B 2 |
| | A 7 15150 | 2 B 6 |
| | A 7 15200 | 2 B 8 |
| 871782 | A 7 10000 | 2 A 14 |
| 871782 | A 7 10050 | 2 A 16 |
| 874125 | A 7 10000 | 2 A 14 |
| | A 7 10050 | 2 A 16 |
| 875170 | A 7 10200 | 2 A 24 |
| 875248 | A 1 10305 | 1 A 9 |
| | A 1 10320 | 1 A 13 |
| | A 1 10330 | 1 A 15 |
| | A 1 10500 | 1 A 19 |
| | A 1 10550 | 1 A 21 |
| | A 1 10575 | 1 A 23 |
| 876574 | A 9 14000 | 2 D 6 |
| 878196 | E 2 30100 | 2 J 2 |
| | E 2 30650 | 2 J 9 |
| 878231 | E 2 30100 | 2 J 2 |
| | E 2 30650 | 2 J 9 |
| 878232 | E 2 30100 | 2 J 2 |
| | E 2 30650 | 2 J 9 |
| 878233 | E 2 30100 | 2 J 2 |
| | E 2 30650 | 2 J 9 |
| 878234 | E 2 30100 | 2 J 2 |
| | E 2 30650 | 2 J 9 |
| 878235 | E 2 30100 | 2 J 2 |
| | E 2 30650 | 2 J 9 |
| 879717 | A 1 10500 | 1 A 19 |
| | A 1 10600 | 1 B 2 |
| | D 1 10040 | 2 H 12 |
| | D 1 10090 | 2 H 14 |
| 883734 | E 2 30100 | 2 J 2 |
| | E 2 30650 | 2 J 9 |
| 886267 | E 2 20000 | 2 I 22 |
| 886526 | A 1 25100 | 1 C 6 |
| | A 1 25200 | 1 C 10 |
| 886527 | A 1 25100 | 1 C 6 |
| | A 1 25200 | 1 C 10 |
| 886570 | A 1 25200 | 1 C 10 |
| 886718 | A 7 25000 | 2 B 22 |
| | A 7 30100 | 2 C 2 |
| 887578 | A 7 10000 | 2 A 14 |
| | A 7 10050 | 2 A 16 |
| 887737 | A 5 10050 | 1 I 10 |
| | A 5 10210 | 1 I 14 |
| | A 5 20050 | 1 I 18 |
| 888331 | A 9 16050 | 2 D 10 |
| 891069 | A 7 10150 | 2 A 22 |
| 891071 | A 7 10150 | 2 A 22 |
| 891072 | A 7 10150 | 2 A 22 |
| 891073 | A 7 10150 | 2 A 22 |
| 891327 | A 1 25200 | 1 C 10 |
| 891328 | A 1 25200 | 1 C 10 |
| 892833 | A 1 25100 | 1 C 6 |
| 894831 | A 6 11010 | 1 K 2 |
| | D 1 20080 | 2 H 18 |
| | D 1 20100 | 2 H 22 |
| 896978 | F 2 50060 | 2 L 12 |
| | F 2 50105 | 2 L 15 |
| 896979 | F 2 50060 | 2 L 12 |
| | F 2 50105 | 2 L 15 |
| 896982 | F 2 50060 | 2 L 12 |
| | F 2 50105 | 2 L 15 |
| 896983 | F 2 50060 | 2 L 12 |
| | F 2 50105 | 2 L 15 |
| 896985 | F 2 50060 | 2 L 12 |
| | F 2 50105 | 2 L 15 |
| 896988 | F 2 50060 | 2 L 12 |
| | F 2 50105 | 2 L 15 |
| 896989 | F 2 50060 | 2 L 12 |
| | F 2 50105 | 2 L 15 |
| 896990 | F 2 50060 | 2 L 12 |
| | F 2 50105 | 2 L 15 |
| 896991 | F 2 50060 | 2 L 12 |
| | F 2 50105 | 2 L 15 |
| 896992 | F 2 50060 | 2 L 12 |
| | F 2 50105 | 2 L 15 |
| 896993 | F 2 50060 | 2 L 12 |
| 896994 | F 2 50060 | 2 L 12 |

| Part No. | Group No. | Microfiche Loc. |
|---|---|---|
| 896994 | F 2 50105 | 2 L 15 |
| 898224 | E 2 20000 | 2 I 22 |
| 899038 | E 2 30650 | 2 J 9 |
| 899039 | E 2 30100 | 2 J 2 |
| | E 2 30650 | 2 J 9 |
| 940081 | A 5 10050 | 1 I 10 |
| | A 5 10210 | 1 I 14 |
| | A 5 20050 | 1 I 18 |
| 940090 | A 5 30100 | 1 I 22 |
| | A 5 40150 | 1 J 2 |
| | A 5 40500 | 1 J 12 |
| | A 5 50050 | 1 J 16 |
| | A 5 60025 | 1 J 20 |
| 940091 | A 5 30100 | 1 I 22 |
| 940092 | A 5 30100 | 1 I 22 |
| 940224 | A 5 30100 | 1 I 22 |
| 940636 | F 2 92000 | 3 B 14 |
| 940638 | D 1 10090 | 2 H 14 |
| 940653 | A 5 10050 | 1 I 10 |
| | A 5 10210 | 1 I 14 |
| | A 5 20050 | 1 I 18 |
| 940654 | A 5 10050 | 1 I 10 |
| | A 5 10210 | 1 I 14 |
| | A 5 20050 | 1 I 18 |
| 941214 | F 2 92000 | 3 B 14 |
| 941226 | A 7 25000 | 2 B 22 |
| | A 7 30100 | 2 C 2 |
| 941227 | A 7 25000 | 2 B 22 |
| | A 7 30100 | 2 C 2 |
| 941238 | A 7 25000 | 2 B 22 |
| | A 7 30100 | 2 C 2 |
| 941474 | A 1 25100 | 1 C 6 |
| 942746 | A 9 14000 | 2 D 6 |
| 942792 | A 1 20150 | 1 B 24 |
| | A 1 20200 | 1 C 2 |
| | A 1 25200 | 1 C 10 |
| 944054 | A 7 25000 | 2 B 22 |
| | A 7 30100 | 2 C 2 |
| 944408 | J 1 50000 | 3 F 5 |
| 944466 | E 2 30100 | 2 J 2 |
| 944469 | E 2 30100 | 2 J 2 |
| | E 2 30650 | 2 J 9 |
| 944471 | E 2 30100 | 2 J 2 |
| | E 2 30650 | 2 J 9 |
| 944645 | E 2 30100 | 2 J 2 |
| | E 2 30650 | 2 J 9 |
| 944862 | A 5 30100 | 1 I 22 |
| | A 5 40150 | 1 J 2 |
| | A 5 40250 | 1 J 6 |
| | A 5 40475 | 1 J 10 |
| | A 5 40500 | 1 J 12 |
| | A 5 50050 | 1 J 16 |
| | A 5 60025 | 1 J 20 |
| 944907 | F 2 90000 | 3 A 23 |
| | F 2 90050 | 3 B 2 |
| | F 2 90450 | 3 B 6 |
| | F 2 90500 | 3 B 10 |
| 944968 | A 7 25000 | 2 B 22 |
| | A 7 30100 | 2 C 2 |
| 944969 | A 7 25000 | 2 B 22 |
| | A 7 30100 | 2 C 2 |
| 945060 | A 1 25100 | 1 C 6 |
| 945374 | A 3 11000 | 1 E 2 |
| | A 3 12000 | 1 E 6 |
| 945444 | J 1 50000 | 3 F 5 |
| 945445 | J 1 50000 | 3 F 5 |
| 945446 | J 1 50000 | 3 F 5 |
| 946008 | J 1 50000 | 3 F 5 |
| 946011 | J 1 50000 | 3 F 5 |
| 946163 | A 7 30100 | 2 C 2 |
| 946479 | A 7 10150 | 2 A 22 |
| 946860 | A 1 25100 | 1 C 6 |
| 947289 | J 1 10000 | 3 F 1 |
| 947293 | J 1 50000 | 3 F 5 |
| 947596 | E 1 13000 | 2 I 14 |
| 947930 | A 7 10150 | 2 A 22 |
| 947931 | A 7 10150 | 2 A 22 |
| 948251 | E 2 30650 | 2 J 9 |
| 949095 | J 1 50000 | 3 F 5 |
| 949096 | J 1 50000 | 3 F 5 |
| 949098 | J 1 50000 | 3 F 5 |
| 949985 | J 1 20000 | 3 F 3 |
| 952001 | F 2 92000 | 3 B 14 |
| 952160 | A 6 22010 | 1 L 11 |
| | A 6 23000 | 1 L 16 |
| 954597 | A 7 10200 | 2 A 24 |
| 955743 | A 4 10000 | 1 F 2 |
| | A 4 10600 | 1 F 6 |
| | A 4 10700 | 1 F 12 |
| | A 4 11000 | 1 F 16 |
| | A 4 20610 | 1 G 12 |
| | A 4 21000 | 1 G 24 |
| | A 4 21200 | 1 H 2 |
| 958653 | F 2 92000 | 3 B 14 |
| 960373 | E 2 20000 | 2 I 22 |
| 960419 | J 1 20000 | 3 F 3 |
| 960837 | A 7 10150 | 2 A 22 |
| 961028 | J 1 50000 | 3 F 5 |
| 961172 | J 1 50000 | 3 F 5 |
| 961262 | J 1 20000 | 3 F 3 |
| 961658 | J 1 20000 | 3 F 3 |
| 961901 | A 7 10150 | 2 A 22 |
| 963023 | J 1 50000 | 3 F 5 |
| 966349 | A 7 30100 | 2 C 2 |
| 990087 | E 2 20000 | 2 I 22 |
| 990774 | A 9 14000 | 2 D 6 |
| 990932 | F 2 50105 | 2 L 15 |
| 992313 | E 2 20000 | 2 I 22 |
| 992712 | E 2 40000 | 2 J 13 |
| 1300057 | F 2 95050 | 3 B 19 |
| 1300309 | A 10 10030 | 2 D 22 |
| 1300495 | E 1 13000 | 2 I 14 |
| 1301761 | B 4 10070 | 2 G 10 |
| 1302005 | A 10 10030 | 2 D 22 |
| 1302189 | E 1 13000 | 2 I 14 |
| 1303213 | F 2 50105 | 2 L 15 |
| 1304040 | A 9 20100 | 2 D 14 |
| 1304638 | A 6 24150 | 2 A 10 |
| 1304938 | A 1 20125 | 1 B 20 |
| 1305106 | J 1 20000 | 3 F 3 |
| 1305202 | J 1 20000 | 3 F 3 |
| 1305373 | A 3 20100 | 1 E 24 |
| 1306529 | A 9 14000 | 2 D 6 |
| 1309108 | A 6 19000 | 1 K 23 |
| | F 2 50060 | 2 L 12 |
| | F 2 50105 | 2 L 15 |
| 1310761 | B 4 10130 | 2 G 14 |
| | F 2 95050 | 3 B 19 |
| 1310799 | A 8 10130 | 2 C 22 |
| 1312081 | A 3 20100 | 1 E 24 |
| 1313426 | A 7 10100 | 2 A 18 |
| 1313427 | A 7 10100 | 2 A 18 |
| 1313998 | A 9 14000 | 2 D 6 |
| 1314773 | A 6 24050 | 1 L 21 |
| | A 6 24150 | 2 A 10 |
| 1314774 | A 6 24050 | 1 L 21 |
| | A 6 24150 | 2 A 10 |
| 1317072 | B 1 10070 | 2 E 14 |
| | B 1 20050 | 2 F 2 |
| 1317198 | A 3 20050 | 1 E 22 |
| | A 3 20100 | 1 E 24 |
| 1317408 | A 9 20200 | 2 D 18 |
| | A 10 20150 | 2 E 6 |
| 1318083 | E 2 70000 | 2 J 19 |
| 1318084 | E 2 70000 | 2 J 20 |
| 1319227 | E 1 13000 | 2 I 14 |
| 1319348 | E 1 13050 | 2 I 18 |
| 1319807 | A 7 15400 | 2 B 16 |
| 1320982 | A 10 10030 | 2 D 22 |
| 1501478 | F 2 90000 | 3 A 23 |

| Part No. | Group No. | Microfiche Loc. |
|---|---|---|
| 1501478 | F 2 90050 | 3 B 2 |
| 1501855 | J 1 10000 | 3 F 1 |
| 1502845 | E 1 13050 | 2 I 18 |
| 1503013 | E 1 13050 | 2 I 18 |
| 1503251 | A 9 20200 | 2 D 18 |
| | A 10 20150 | 2 E 6 |
| 1503465 | E 1 13000 | 2 I 14 |
| 1503467 | E 1 13050 | 2 I 18 |
| 1503564 | A 6 11010 | 1 K 2 |
| | B 1 20050 | 2 F 2 |
| 1503629 | E 1 10020 | 2 I 4 |
| | E 1 10040 | 2 I 6 |
| | E 1 12000 | 2 I 12 |
| 1503639 | E 1 10020 | 2 I 4 |
| | E 1 10040 | 2 I 6 |
| | E 1 12000 | 2 I 12 |
| 1513887 | F 2 60050 | 3 A 14 |
| 1520190 | D 1 20080 | 2 H 18 |
| | D 1 20100 | 2 H 22 |
| 1520193 | D 1 20080 | 2 H 18 |
| | D 1 20100 | 2 H 22 |
| 1520467 | E 1 13050 | 2 I 18 |
| 1520566 | A 9 10060 | 2 D 2 |
| 1522449 | A 1 20150 | 1 B 24 |
| 1522535 | A 3 20100 | 1 E 24 |
| | A 7 15100 | 2 B 2 |
| | A 7 15150 | 2 B 6 |
| | A 7 15200 | 2 B 8 |
| | A 7 15350 | 2 B 14 |
| | A 7 15400 | 2 B 16 |
| | A 7 15450 | 2 B 18 |
| | A 9 20200 | 2 D 18 |
| | A 10 20150 | 2 E 6 |
| 1523209 | D 1 20080 | 2 H 18 |
| | D 1 20100 | 2 H 22 |
| 1523210 | D 1 20080 | 2 H 18 |
| | D 1 20100 | 2 H 22 |
| 1525766 | F 2 40050 | 2 L 8 |
| 1529625 | A 1 25100 | 1 C 6 |
| | B 4 10050 | 2 G 6 |
| | B 4 10065 | 2 G 8 |
| | B 4 10130 | 2 G 14 |
| 1530264 | E 1 10020 | 2 I 4 |
| | E 1 10040 | 2 I 6 |
| | E 1 12000 | 2 I 12 |
| 1530361 | F 2 51080 | 2 L 19 |
| 1531929 | A 9 10060 | 2 D 2 |
| 1533614 | A 8 10050 | 2 C 14 |
| | A 8 10110 | 2 C 18 |
| | A 8 10130 | 2 C 22 |
| 1534135 | F 2 51200 | 2 L 23 |
| 1534136 | F 1 20050 | 2 K 14 |
| | F 1 20350 | 2 K 18 |
| 1534139 | F 1 20050 | 2 K 14 |
| 1534140 | F 1 20050 | 2 K 14 |
| 1534143 | F 1 20050 | 2 K 14 |
| 1534144 | F 1 20050 | 2 K 14 |
| 1534237 | B 1 20175 | 2 F 6 |
| 1536234 | E 1 13000 | 2 I 14 |
| 1537934 | F 2 51080 | 2 L 19 |
| | A 6 11010 | 1 K 2 |
| 1541607 | A 8 10130 | 2 C 22 |
| 1542360 | A 6 11010 | 1 K 2 |
| | A 8 10050 | 2 C 14 |
| | A 8 10130 | 2 C 22 |
| 1545134 | A 9 14000 | 2 D 6 |
| 1564758 | E 1 13000 | 2 I 14 |
| 1573309 | B 6 10000 | 2 G 22 |
| | B 6 10020 | 2 H 2 |
| | E 1 13000 | 2 I 14 |
| | E 1 13050 | 2 I 18 |
| 1574466 | B 1 10045 | 2 E 12 |
| | B 1 10070 | 2 E 14 |
| | B 1 15070 | 2 E 18 |
| 1574466 | B 3 10010 | 2 G 2 |
| | E 1 10010 | 2 I 2 |
| | E 1 10020 | 2 I 4 |
| | E 1 10040 | 2 I 6 |
| | E 1 12000 | 2 I 12 |
| | E 2 70000 | 2 J 19 |
| 1632459 | A 1 20150 | 1 B 24 |
| | A 1 20200 | 1 C 2 |
| 1736910 | A 10 10030 | 2 D 22 |
| 1798568 | F 1 20050 | 2 K 14 |
| | F 1 20350 | 2 K 18 |
| 1801087 | F 1 20350 | 2 K 18 |
| 1801094 | F 1 10020 | 2 J 24 |
| | F 1 10045 | 2 K 4 |
| | F 1 10240 | 2 K 6 |
| 1801148 | F 1 10045 | 2 K 4 |
| | F 1 10290 | 2 K 10 |
| 1811377 | F 1 20050 | 2 K 14 |
| 1900019 | A 7 10000 | 2 A 14 |
| | A 7 10050 | 2 A 16 |
| 1900020 | A 7 10000 | 2 A 14 |
| | A 7 10050 | 2 A 16 |
| 1900062 | A 5 10210 | 1 I 14 |
| 1900065 | A 7 15450 | 2 B 18 |
| | A 7 40150 | 2 C 6 |
| 1900083 | A 7 15100 | 2 B 2 |
| | A 7 15150 | 2 B 6 |
| | A 7 15300 | 2 B 12 |
| | A 7 15350 | 2 B 14 |
| 1900128 | A 9 10060 | 2 D 2 |
| 1900167 | B 1 10045 | 2 E 12 |
| | B 1 10070 | 2 E 14 |
| | B 1 15070 | 2 E 18 |
| | E 1 10010 | 2 I 2 |
| 1900168 | B 1 10045 | 2 E 12 |
| | B 1 10070 | 2 E 14 |
| | B 1 15070 | 2 E 18 |
| | B 3 10010 | 2 G 2 |
| | E 1 10010 | 2 I 2 |
| 1900177 | A 7 15450 | 2 B 18 |
| | A 7 40150 | 2 C 6 |
| 1900194 | B 2 10000 | 2 F 22 |
| | B 5 10045 | 2 G 18 |
| 1900205 | E 1 10010 | 2 I 2 |
| 1900215 | A 6 21050 | 1 L 6 |
| 1900220 | E 1 10010 | 2 I 2 |
| 1900221 | E 1 10010 | 2 I 2 |
| 1900222 | E 1 10010 | 2 I 2 |
| 1900223 | E 1 10010 | 2 I 2 |
| 1900224 | E 1 10010 | 2 I 2 |
| 1900225 | E 1 10010 | 2 I 2 |
| 1900226 | E 1 10010 | 2 I 2 |
| 1900338 | A 7 15450 | 2 B 18 |
| | A 7 40150 | 2 C 6 |
| | B 1 20175 | 2 F 6 |
| | B 1 23150 | 2 F 16 |
| 1900349 | F 2 96700 | 3 C 14 |
| 1900350 | F 2 96600 | 3 C 10 |
| | F 2 96980 | 3 D 2 |
| 1900460 | F 1 20050 | 2 K 14 |
| | F 1 20350 | 2 K 18 |
| | F 2 51080 | 2 L 19 |
| | F 2 51200 | 2 L 23 |
| | F 2 51250 | 3 A 9 |
| 1900464 | F 1 20050 | 2 K 14 |
| | F 2 51200 | 2 L 23 |
| 1900491 | A 3 20050 | 1 E 22 |
| 1900497 | A 3 20050 | 1 E 22 |
| | A 3 20100 | 1 E 24 |
| 1900501 | A 3 20050 | 1 E 22 |
| | A 3 20100 | 1 E 24 |
| 1900503 | A 3 20050 | 1 E 22 |
| | A 3 20100 | 1 E 24 |
| 1900510 | A 9 20100 | 2 D 14 |
| 1900538 | A 7 40150 | 2 C 6 |

| Part No. | Group No. | Microfiche Loc. |
|---|---|---|
| 1900572 | A 7 40150 | 2 C 6 |
| 1900582 | F 2 51200 | 2 L 23 |
| 1900603 | A 8 10050 | 2 C 14 |
| | A 8 10110 | 2 C 18 |
| | A 8 10130 | 2 C 22 |
| 1900609 | D 1 20080 | 2 H 18 |
| 1900638 | F 2 90450 | 3 B 6 |
| | F 2 90500 | 3 B 10 |
| 1900649 | A 4 10000 | 1 F 2 |
| | A 4 10600 | 1 F 6 |
| | A 4 10700 | 1 F 12 |
| | A 4 11000 | 1 F 16 |
| | A 4 20610 | 1 G 12 |
| | A 4 20700 | 1 G 16 |
| | A 4 21000 | 1 G 24 |
| | A 4 21200 | 1 H 2 |
| | F 2 96800 | 3 C 18 |
| | F 2 96980 | 3 D 2 |
| | F 2 97000 | 3 D 4 |
| 1900666 | A 3 15050 | 1 E 14 |
| | A 3 15150 | 1 E 18 |
| 1900671 | A 4 21000 | 1 G 24 |
| | B 1 23000 | 2 F 10 |
| | B 1 23050 | 2 F 12 |
| | B 1 23100 | 2 F 14 |
| 1900710 | A 7 15100 | 2 B 2 |
| | A 7 15150 | 2 B 6 |
| | A 7 15300 | 2 B 12 |
| | A 7 15350 | 2 B 14 |
| | A 7 15450 | 2 B 18 |
| 1900759 | D 1 20080 | 2 H 18 |
| 1900769 | A 9 10060 | 2 D 2 |
| 1900793 | A 3 20050 | 1 E 22 |
| | A 3 20100 | 1 E 24 |
| 1900802 | A 1 15060 | 1 B 6 |
| | A 1 15150 | 1 B 10 |
| | A 1 15200 | 1 B 12 |
| | A 1 15250 | 1 B 16 |
| 1900806 | F 1 10020 | 2 J 24 |
| 1900873 | D 1 20080 | 2 H 18 |
| 1900875 | D 1 20080 | 2 H 18 |
| | D 1 20100 | 2 H 22 |
| 1900876 | D 1 20080 | 2 H 18 |
| | D 1 20100 | 2 H 22 |
| 1900885 | A 3 15050 | 1 E 14 |
| 1900890 | F 2 90450 | 3 B 6 |
| 1900900 | A 3 15050 | 1 E 14 |
| 1900902 | F 1 10020 | 2 J 24 |
| 1900903 | A 9 20100 | 2 D 14 |
| 1900923 | B 1 20050 | 2 F 2 |
| 1900963 | B 1 10045 | 2 E 12 |
| | B 1 10070 | 2 E 14 |
| 1900990 | B 1 10045 | 2 E 12 |
| | B 1 10070 | 2 E 14 |
| 1901000 | F 2 10040 | 2 K 22 |
| 1901018 | A 9 10060 | 2 D 2 |
| 1901019 | A 9 10060 | 2 D 2 |
| 1901020 | A 9 10060 | 2 D 2 |
| 1901021 | A 9 10060 | 2 D 2 |
| 1901024 | A 1 15060 | 1 B 6 |
| 1901079 | B 1 10045 | 2 E 12 |
| | B 1 10070 | 2 E 14 |
| | B 1 15070 | 2 E 18 |
| | B 1 20175 | 2 F 6 |
| | B 3 10010 | 2 G 2 |
| | E 1 10010 | 2 I 2 |
| | E 1 10020 | 2 I 4 |
| | E 1 10040 | 2 I 6 |
| 1901081 | D 1 20080 | 2 H 18 |
| | D 1 20100 | 2 H 22 |
| 1901098 | B 4 10050 | 2 G 6 |
| 1901317 | F 2 96400 | 3 C 2 |
| 1901340 | A 7 15450 | 2 B 18 |
| 1901345 | A 3 20050 | 1 E 22 |
| 1901352 | A 3 20050 | 1 E 22 |
| 1901359 | A 3 20050 | 1 E 22 |
| 1901362 | A 1 10305 | 1 A 9 |
| | A 1 10320 | 1 A 13 |
| | A 1 10330 | 1 A 15 |
| | A 1 10500 | 1 A 19 |
| | A 1 10550 | 1 A 21 |
| | A 1 10575 | 1 A 23 |
| | A 1 10600 | 1 B 2 |
| | B 4 10050 | 2 G 6 |
| | B 4 10065 | 2 G 8 |
| | B 4 10070 | 2 G 10 |
| | B 4 10130 | 2 G 14 |
| 1901370 | A 6 10040 | 1 J 24 |
| 1901380 | A 3 15050 | 1 E 14 |
| | A 3 15150 | 1 E 18 |
| 1901385 | A 9 10060 | 2 D 2 |
| 1901396 | A 9 10060 | 2 D 2 |
| 1901398 | A 7 15450 | 2 B 18 |
| | A 7 40150 | 2 C 6 |
| | A 7 50050 | 2 C 10 |
| 1901399 | A 7 15450 | 2 B 18 |
| | A 7 40150 | 2 C 6 |
| 1901442 | A 7 10100 | 2 A 18 |
| 1901444 | A 7 10100 | 2 A 18 |
| 1901445 | A 7 10100 | 2 A 18 |
| 1901446 | A 7 10100 | 2 A 18 |
| 1901447 | F 1 20050 | 2 K 14 |
| | F 2 51200 | 2 L 23 |
| 1901448 | F 1 20050 | 2 K 14 |
| | F 2 51200 | 2 L 23 |
| 1901460 | A 8 10050 | 2 C 14 |
| | A 8 10110 | 2 C 18 |
| | A 8 10130 | 2 C 22 |
| | A 9 10060 | 2 D 2 |
| 1901461 | A 7 15450 | 2 B 18 |
| | A 7 40150 | 2 C 6 |
| 1901463 | A 9 10060 | 2 D 2 |
| 1901464 | A 9 10060 | 2 D 2 |
| | D 1 10040 | 2 H 12 |
| 1901466 | B 1 20050 | 2 F 2 |
| 1901479 | A 1 20125 | 1 B 20 |
| | A 1 20150 | 1 B 24 |
| | A 1 20200 | 1 C 2 |
| 1901494 | A 8 10050 | 2 C 14 |
| | A 8 10110 | 2 C 18 |
| | A 8 10130 | 2 C 22 |
| 1901495 | A 8 10050 | 2 C 14 |
| | A 8 10110 | 2 C 18 |
| | A 8 10130 | 2 C 22 |
| 1901502 | D 1 10040 | 2 H 12 |
| | D 1 10090 | 2 H 14 |
| 1901505 | B 1 10045 | 2 E 12 |
| | B 1 10070 | 2 E 14 |
| | B 1 20050 | 2 F 2 |
| | B 1 20175 | 2 F 6 |
| 1901538 | E 2 30100 | 2 J 2 |
| 1901542 | B 1 20050 | 2 F 2 |
| | B 1 20175 | 2 F 6 |
| 1901550 | B 2 10000 | 2 F 22 |
| | B 5 10045 | 2 G 18 |
| 1901575 | A 7 10100 | 2 A 18 |
| | A 7 15450 | 2 B 18 |
| 1901632 | A 1 10305 | 1 A 9 |
| | A 1 10320 | 1 A 13 |
| | A 1 10330 | 1 A 15 |
| | A 1 10500 | 1 A 19 |
| | A 1 10550 | 1 A 21 |
| | A 1 10575 | 1 A 23 |
| | A 1 10600 | 1 B 2 |
| | F 1 10045 | 2 K 4 |
| 1901701 | A 1 25100 | 1 C 6 |
| 1901712 | B 4 10050 | 2 G 6 |
| 1901718 | A 1 25100 | 1 C 6 |
| 1901722 | A 1 25100 | 1 C 6 |
| 1901739 | C 1 10040 | 2 H 6 |

| Part No. | Group No. | Microfiche Loc. |
|---|---|---|
| 1901749 | F 2 51080 | 2 L 19 |
| | F 2 51200 | 2 L 23 |
| | F 2 51250 | 3 A 9 |
| 1901766 | A 1 20150 | 1 B 24 |
| 1901771 | F 2 96470 | 3 C 4 |
| | F 2 96880 | 3 C 20 |
| 1901775 | F 2 96400 | 3 C 2 |
| | F 2 96470 | 3 C 4 |
| | F 2 96500 | 3 C 6 |
| | F 2 96600 | 3 C 10 |
| | F 2 96650 | 3 C 12 |
| | F 2 96700 | 3 C 14 |
| | F 2 96800 | 3 C 18 |
| | F 2 96880 | 3 C 20 |
| 1901852 | A 1 20150 | 1 B 24 |
| 1901854 | A 1 20150 | 1 B 24 |
| 1901856 | A 1 20150 | 1 B 24 |
| 1901859 | A 1 20150 | 1 B 24 |
| 1901972 | A 1 25100 | 1 C 6 |
| | A 1 25200 | 1 C 10 |
| 1901977 | F 2 96470 | 3 C 4 |
| 1901981 | B 1 20050 | 2 F 2 |
| | D 1 10040 | 2 H 12 |
| | D 1 10090 | 2 H 14 |
| 1901993 | F 2 51200 | 2 L 23 |
| 1902030 | A 1 25100 | 1 C 6 |
| 1902031 | B 4 10050 | 2 G 6 |
| | B 4 10065 | 2 G 8 |
| | B 4 10070 | 2 G 10 |
| | B 4 10130 | 2 G 14 |
| 1902034 | C 1 10040 | 2 H 6 |
| 1902035 | C 1 10040 | 2 H 6 |
| 1902037 | B 4 10050 | 2 G 6 |
| | B 4 10065 | 2 G 8 |
| | B 4 10070 | 2 G 10 |
| | B 4 10130 | 2 G 14 |
| 1902041 | A 1 20125 | 1 B 20 |
| 1902050 | A 7 15100 | 2 B 2 |
| | A 7 15200 | 2 B 8 |
| | A 7 15300 | 2 B 12 |
| 1902051 | A 7 15100 | 2 B 2 |
| | A 7 15300 | 2 B 12 |
| 1902052 | A 6 10040 | 1 J 24 |
| 1902059 | A 1 25200 | 1 C 10 |
| 1902064 | A 1 20150 | 1 B 24 |
| 1902071 | A 9 20100 | 2 D 14 |
| 1902072 | A 9 20100 | 2 D 14 |
| 1902094 | F 2 92000 | 3 B 14 |
| 1902106 | A 7 15300 | 2 B 12 |
| | A 7 15350 | 2 B 14 |
| | A 7 15450 | 2 B 18 |
| 1902169 | F 2 90000 | 3 A 23 |
| 1902171 | A 1 25100 | 1 C 6 |
| 1902178 | D 1 20100 | 2 H 22 |
| 1902188 | A 1 20150 | 1 B 24 |
| | A 1 20200 | 1 C 2 |
| 1902190 | A 1 20150 | 1 B 24 |
| | A 1 20200 | 1 C 2 |
| 1902197 | B 4 10050 | 2 G 6 |
| | B 4 10130 | 2 G 14 |
| 1902214 | A 1 25200 | 1 C 10 |
| 1902216 | A 1 25200 | 1 C 10 |
| 1902219 | A 1 25200 | 1 C 10 |
| 1902246 | A 1 10500 | 1 A 19 |
| 1902275 | F 2 51080 | 2 L 19 |
| | F 2 51200 | 2 L 23 |
| | F 2 51250 | 3 A 9 |
| 1902314 | D 1 20100 | 2 H 22 |
| 1902315 | D 1 20100 | 2 H 22 |
| 1902322 | A 1 10500 | 1 A 19 |
| 1902326 | D 1 20080 | 2 H 18 |
| 1902328 | A 3 20050 | 1 E 22 |
| 1902338 | A 1 10500 | 1 A 19 |
| | A 1 10550 | 1 A 21 |
| | A 1 10575 | 1 A 23 |
| 1902338 | A 1 10600 | 1 B 2 |
| 1902342 | A 1 10500 | 1 A 19 |
| 1902345 | A 1 10500 | 1 A 19 |
| 1902347 | A 1 10600 | 1 B 2 |
| 1902352 | A 3 20050 | 1 E 22 |
| 1902353 | A 3 20050 | 1 E 22 |
| 1902356 | A 3 20050 | 1 E 22 |
| 1902364 | A 1 15150 | 1 B 10 |
| | A 1 15200 | 1 B 12 |
| | F 2 51200 | 2 L 23 |
| 1902371 | A 1 15150 | 1 B 10 |
| | A 1 15200 | 1 B 12 |
| | F 2 51200 | 2 L 23 |
| 1902374 | A 1 20150 | 1 B 24 |
| 1902378 | A 1 15150 | 1 B 10 |
| | A 1 15200 | 1 B 12 |
| | A 1 15250 | 1 B 16 |
| 1902379 | A 1 15150 | 1 B 10 |
| 1902380 | A 1 15150 | 1 B 10 |
| 1902396 | A 1 15150 | 1 B 10 |
| 1902490 | A 1 20125 | 1 B 20 |
| | A 1 20200 | 1 C 2 |
| | G 1 10000 | 3 D 6 |
| 1902567 | F 2 92000 | 3 B 14 |
| 1902570 | F 2 92000 | 3 B 14 |
| 1902571 | F 2 92000 | 3 B 14 |
| 1902572 | F 2 92000 | 3 B 14 |
| 1902573 | F 2 92000 | 3 B 14 |
| 1902574 | F 2 92000 | 3 B 14 |
| 1902581 | A 7 30100 | 2 C 2 |
| 1902585 | A 7 30100 | 2 C 2 |
| 1902586 | A 7 30100 | 2 C 2 |
| 1902593 | F 2 92000 | 3 B 14 |
| 1902594 | F 2 92000 | 3 B 14 |
| 1902604 | C 1 10040 | 2 H 6 |
| 1902607 | A 7 30100 | 2 C 2 |
| 1902612 | A 1 20150 | 1 B 24 |
| 1902615 | F 2 51200 | 2 L 23 |
| 1902616 | F 2 51200 | 2 L 23 |
| 1902617 | A 7 15100 | 2 B 2 |
| | A 7 15150 | 2 B 6 |
| | A 7 15200 | 2 B 8 |
| 1902719 | A 1 20150 | 1 B 24 |
| 1902750 | A 6 11010 | 1 K 2 |
| 1902755 | A 6 11010 | 1 K 2 |
| 1902756 | A 6 11010 | 1 K 3 |
| 1902769 | E 1 10020 | 2 I 4 |
| | E 1 10040 | 2 I 6 |
| | E 1 12000 | 2 I 12 |
| 1902835 | A 1 20125 | 1 B 20 |
| 1902842 | A 1 20125 | 1 B 20 |
| | A 1 20200 | 1 C 2 |
| 1902847 | F 1 20050 | 2 K 14 |
| | F 1 20350 | 2 K 18 |
| 1902848 | A 1 20125 | 1 B 20 |
| | A 1 20200 | 1 C 2 |
| | G 1 10000 | 3 D 6 |
| 1902859 | F 2 51200 | 2 L 23 |
| 1902860 | F 2 51200 | 2 L 23 |
| 1902861 | B 4 10130 | 2 G 14 |
| 1902869 | F 2 92000 | 3 B 14 |
| 1902871 | A 8 10050 | 2 C 14 |
| | A 8 10110 | 2 C 18 |
| | A 8 10130 | 2 C 22 |
| 1902877 | B 2 10000 | 2 F 22 |
| | B 5 10045 | 2 G 18 |
| 1902962 | C 1 10040 | 2 H 6 |
| 1902971 | A 1 20125 | 1 B 20 |
| | A 1 20200 | 1 C 2 |
| 1902976 | C 1 10040 | 2 H 6 |
| 1903001 | B 1 16000 | 2 E 22 |
| 1903088 | F 2 51200 | 2 L 23 |
| | F 2 51250 | 3 A 9 |
| 1903090 | A 1 15150 | 1 B 10 |
| | A 1 15200 | 1 B 12 |

| Part No. | Group No. | Microfiche Loc. |
|---|---|---|
| 1903092 | A 1 10500 | 1 A 19 |
| 1903093 | A 1 15150 | 1 B 10 |
| 1903102 | F 2 96470 | 3 C 4 |
| 1903128 | B 1 10045 | 2 E 12 |
| | B 1 10070 | 2 E 14 |
| 1903130 | A 1 10500 | 1 A 19 |
| 1903262 | B 6 10000 | 2 G 22 |
| | B 6 10020 | 2 H 2 |
| | E 1 13000 | 2 I 14 |
| | E 1 13050 | 2 I 18 |
| 1903441 | F 2 96550 | 3 C 8 |
| 1903464 | F 1 10020 | 2 J 24 |
| 1903465 | B 2 10000 | 2 F 22 |
| 1903689 | B 6 10000 | 2 G 22 |
| | B 6 10020 | 2 H 2 |
| | E 1 13000 | 2 I 14 |
| | E 1 13050 | 2 I 18 |
| 1903693 | B 1 20050 | 2 F 2 |
| | D 1 10040 | 2 H 12 |
| | D 1 10090 | 2 H 14 |
| 1903932 | F 1 10045 | 2 K 4 |
| 1904058 | A 1 10305 | 1 A 9 |
| | A 1 10320 | 1 A 13 |
| | A 1 10330 | 1 A 15 |
| | A 1 10550 | 1 A 21 |
| | A 1 10575 | 1 A 23 |
| | A 1 10600 | 1 B 2 |
| 1904064 | A 1 15150 | 1 B 10 |
| | A 1 15200 | 1 B 12 |
| | A 1 15250 | 1 B 16 |
| 1904065 | A 1 15150 | 1 B 10 |
| | A 1 15200 | 1 B 12 |
| | A 1 15250 | 1 B 16 |
| 1904206 | A 1 10500 | 1 A 19 |
| 1904221 | A 1 20150 | 1 B 24 |
| 1904293 | B 1 16000 | 2 E 22 |
| 1904341 | F 2 96370 | 3 B 24 |
| | F 2 96750 | 3 C 16 |
| 1904422 | A 1 20150 | 1 B 24 |
| 1904588 | A 1 10305 | 1 A 9 |
| | A 1 10320 | 1 A 13 |
| | A 1 10330 | 1 A 15 |
| 1904595 | A 1 10305 | 1 A 9 |
| | A 1 10320 | 1 A 13 |
| | A 1 10330 | 1 A 15 |
| 1904600 | J 1 10000 | 3 F 1 |
| 1904639 | A 7 15200 | 2 B 8 |
| 1904644 | B 4 10050 | 2 G 6 |
| 1904645 | B 4 10050 | 2 G 6 |
| 1904646 | B 4 10130 | 2 G 14 |
| 1904674 | E 1 10020 | 2 I 4 |
| 1904686 | B 4 10050 | 2 G 6 |
| | B 4 10130 | 2 G 14 |
| 1904689 | B 4 10130 | 2 G 14 |
| 1904700 | A 1 10305 | 1 A 9 |
| | A 1 10320 | 1 A 13 |
| | A 1 10330 | 1 A 15 |
| 1904701 | A 1 10305 | 1 A 9 |
| 1904728 | A 1 10305 | 1 A 9 |
| | A 1 10320 | 1 A 13 |
| | A 1 10330 | 1 A 15 |
| 1904746 | A 1 10305 | 1 A 9 |
| | A 1 10320 | 1 A 13 |
| | A 1 10330 | 1 A 15 |
| 1904807 | A 6 11010 | 1 K 2 |
| 1904810 | A 6 11010 | 1 K 2 |
| 1904874 | D 1 10090 | 2 H 14 |
| 1904880 | D 1 10090 | 2 H 14 |
| 1904929 | F 2 92000 | 3 B 14 |
| 1904958 | F 1 10020 | 2 J 24 |
| 1905003 | E 1 10020 | 2 I 4 |
| 1905005 | E 1 10020 | 2 I 4 |
| | E 1 10040 | 2 I 6 |
| | E 1 12000 | 2 I 12 |
| 1905053 | A 1 15150 | 1 B 10 |
| | A 1 15200 | 1 B 12 |
| 1905107 | A 1 10500 | 1 A 19 |
| 1905117 | A 6 11010 | 1 K 2 |
| 1905159 | A 6 11010 | 1 K 3 |
| 1905176 | B 6 10000 | 2 G 22 |
| | B 6 10020 | 2 H 2 |
| | E 1 13000 | 2 I 14 |
| | E 1 13050 | 2 I 18 |
| 1905297 | F 2 96370 | 3 B 24 |
| | F 2 96550 | 3 C 8 |
| 1905313 | A 1 10575 | 1 A 23 |
| 1905373 | F 2 96400 | 3 C 2 |
| 1905398 | B 1 20175 | 2 F 6 |
| | B 3 10010 | 2 G 2 |
| | E 1 10020 | 2 I 4 |
| | E 1 10040 | 2 I 6 |
| 1905399 | B 3 10010 | 2 G 2 |
| | E 1 10020 | 2 I 4 |
| | E 1 10040 | 2 I 6 |
| 1905417 | A 1 15060 | 1 B 6 |
| 1905442 | A 3 15050 | 1 E 14 |
| | A 3 15150 | 1 E 18 |
| 1905501 | A 10 12000 | 2 E 2 |
| | E 2 70000 | 2 J 19 |
| 1905507 | B 6 10000 | 2 G 22 |
| | B 6 10020 | 2 H 2 |
| 1905513 | B 6 10000 | 2 G 22 |
| | B 6 10020 | 2 H 2 |
| 1905553 | B 6 10000 | 2 G 22 |
| | B 6 10020 | 2 H 2 |
| 1905619 | A 10 10030 | 2 D 22 |
| 1905644 | D 1 10040 | 2 H 12 |
| | D 1 10090 | 2 H 14 |
| 1905646 | B 5 10045 | 2 G 18 |
| 1905685 | A 6 11010 | 1 K 3 |
| | B 1 20050 | 2 F 2 |
| 1905687 | D 1 10040 | 2 H 12 |
| 1905762 | A 1 10305 | 1 A 9 |
| | A 1 10320 | 1 A 13 |
| | A 1 10330 | 1 A 15 |
| | A 1 10600 | 1 B 2 |
| 1905766 | A 1 10305 | 1 A 9 |
| | A 1 10320 | 1 A 13 |
| | A 1 10330 | 1 A 15 |
| | A 1 10600 | 1 B 2 |
| 1905778 | F 1 20350 | 2 K 18 |
| | F 2 51080 | 2 L 19 |
| | F 2 51250 | 3 A 9 |
| 1905779 | F 2 51080 | 2 L 19 |
| 1905864 | A 6 11010 | 1 K 2 |
| 1905942 | A 10 10030 | 2 D 22 |
| 1906032 | F 1 20350 | 2 K 18 |
| | F 2 51080 | 2 L 19 |
| | F 2 51250 | 3 A 9 |
| 1906104 | F 1 10290 | 2 K 10 |
| 1906106 | F 1 10290 | 2 K 10 |
| 1906183 | D 1 10040 | 2 H 12 |
| | D 1 10090 | 2 H 14 |
| 1906219 | F 1 10240 | 2 K 6 |
| 1906231 | F 1 10240 | 2 K 6 |
| 1906238 | B 6 10000 | 2 G 22 |
| | B 6 10020 | 2 H 2 |
| 1906257 | F 1 10045 | 2 K 4 |
| | F 1 10240 | 2 K 6 |
| 1906258 | E 1 10040 | 2 I 6 |
| | E 1 12000 | 2 I 12 |
| 1906259 | E 1 10040 | 2 I 6 |
| | E 1 12000 | 2 I 12 |
| 1906274 | F 2 96600 | 3 C 10 |
| 1906286 | A 6 11010 | 1 K 2 |
| 1906357 | E 2 70000 | 2 J 19 |
| 1906369 | A 6 11010 | 1 K 2 |
| 1906370 | A 6 11010 | 1 K 2 |
| 1906374 | A 10 12000 | 2 E 2 |

| Part No. | Group No. | Microfiche Loc. |
|---|---|---|
| 1906374 | E 2 70000 | 2 J 19 |
| 1906387 | A 6 11010 | 1 K 2 |
| 1906408 | A 10 10030 | 2 D 22 |
| 1906452 | A 1 20125 | 1 B 20 |
| 1906454 | A 1 20125 | 1 B 20 |
| 1906455 | G 1 10000 | 3 D 6 |
| 1906456 | A 1 20125 | 1 B 20 |
| | G 1 10000 | 3 D 6 |
| 1906507 | A 1 25100 | 1 C 6 |
| 1906582 | A 1 10550 | 1 A 21 |
| | A 1 10575 | 1 A 23 |
| 1906801 | F 2 51200 | 2 L 23 |
| 1906804 | F 2 51200 | 2 L 23 |
| | F 2 51250 | 3 A 9 |
| 1906829 | D 1 10040 | 2 H 12 |
| | D 1 10090 | 2 H 14 |
| 1906866 | A 1 15200 | 1 B 12 |
| | A 1 15250 | 1 B 16 |
| 1907000 | B 6 10000 | 2 G 22 |
| 1907030 | B 6 10000 | 2 G 22 |
| 1907084 | C 1 10040 | 2 H 6 |
| 1907167 | F 2 51250 | 3 A 9 |
| 1907207 | B 1 15070 | 2 E 18 |
| 1907252 | B 5 10045 | 2 G 18 |
| | E 1 12000 | 2 I 12 |
| 1907267 | A 10 10030 | 2 D 22 |
| 1907288 | B 1 15070 | 2 E 18 |
| 1907440 | B 6 10020 | 2 H 2 |
| 1907482 | E 1 13000 | 2 I 14 |
| 1907485 | E 1 13000 | 2 I 14 |
| 1907486 | E 1 13000 | 2 I 14 |
| 1907487 | E 1 13000 | 2 I 14 |
| 1907507 | A 10 20150 | 2 E 6 |
| 1907510 | B 1 10070 | 2 E 14 |
| 1907570 | E 1 13050 | 2 I 18 |
| 1907572 | E 1 13050 | 2 I 18 |
| 1907574 | E 1 13050 | 2 I 18 |
| 1907576 | E 1 13050 | 2 I 18 |
| 1907578 | A 4 20610 | 1 G 12 |
| | B 1 20175 | 2 F 6 |
| | B 1 23000 | 2 F 10 |
| | B 1 23050 | 2 F 12 |
| | B 1 23150 | 2 F 16 |
| | B 1 23200 | 2 F 18 |
| 1907580 | B 6 10020 | 2 H 2 |
| 1907645 | B 1 20050 | 2 F 2 |
| 1907709 | A 10 12000 | 2 E 2 |
| 1907711 | A 1 15060 | 1 B 6 |
| 1907838 | B 6 10000 | 2 G 22 |
| | B 6 10020 | 2 H 2 |
| 1907841 | B 6 10000 | 2 G 22 |
| | B 6 10020 | 2 H 2 |
| 1907842 | B 6 10000 | 2 G 22 |
| | B 6 10020 | 2 H 2 |
| 1907879 | A 1 20200 | 1 C 2 |
| 1907881 | D 1 20100 | 2 H 22 |
| 1907884 | A 1 20150 | 1 B 24 |
| | A 1 20200 | 1 C 2 |
| 1907886 | C 1 10065 | 2 H 10 |
| 1907896 | A 1 15200 | 1 B 12 |
| 1907907 | B 4 10130 | 2 G 14 |
| 1907930 | F 2 96370 | 3 B 24 |
| | F 2 96400 | 3 C 2 |
| | F 2 96470 | 3 C 4 |
| | F 2 96500 | 3 C 6 |
| | F 2 96550 | 3 C 8 |
| | F 2 96600 | 3 C 10 |
| | F 2 96650 | 3 C 12 |
| | F 2 96700 | 3 C 14 |
| | F 2 96750 | 3 C 16 |
| | F 2 96800 | 3 C 18 |
| | F 2 96880 | 3 C 20 |
| | F 2 96900 | 3 C 22 |
| | F 2 96980 | 3 D 2 |
| 1907930 | F 2 97000 | 3 D 4 |
| 1907935 | F 2 96370 | 3 B 24 |
| | F 2 96400 | 3 C 2 |
| | F 2 96470 | 3 C 4 |
| | F 2 96500 | 3 C 6 |
| | F 2 96550 | 3 C 8 |
| | F 2 96600 | 3 C 10 |
| | F 2 96650 | 3 C 12 |
| | F 2 96700 | 3 C 14 |
| | F 2 96750 | 3 C 16 |
| | F 2 96800 | 3 C 18 |
| | F 2 96880 | 3 C 20 |
| | F 2 96900 | 3 C 22 |
| | F 2 96980 | 3 D 2 |
| | F 2 97000 | 3 D 4 |
| 1907943 | F 2 50060 | 2 L 12 |
| 1907944 | F 2 50105 | 2 L 15 |
| 1907996 | A 1 20200 | 1 C 2 |
| | G 1 10000 | 3 D 6 |
| 1908254 | F 2 96880 | 3 C 20 |
| 1908365 | B 5 10045 | 2 G 18 |
| 1908558 | A 10 10030 | 2 D 22 |
| 1908667 | F 1 10290 | 2 K 10 |
| 1908668 | F 1 10290 | 2 K 10 |
| 1908677 | F 2 51200 | 2 L 23 |
| 1908678 | F 2 51200 | 2 L 23 |
| 1908704 | A 8 10050 | 2 C 14 |
| | A 8 10110 | 2 C 18 |
| 1908708 | A 8 10050 | 2 C 14 |
| 1908725 | A 1 10305 | 1 A 9 |
| | A 1 10320 | 1 A 13 |
| | A 1 10330 | 1 A 15 |
| | A 1 10500 | 1 A 19 |
| | A 1 10550 | 1 A 21 |
| | A 1 10575 | 1 A 23 |
| | A 1 10600 | 1 B 2 |
| 1908730 | G 1 10000 | 3 D 6 |
| 1908768 | G 1 10000 | 3 D 6 |
| 1908769 | G 1 10000 | 3 D 6 |
| 1908770 | G 1 10000 | 3 D 6 |
| 1908773 | G 1 10000 | 3 D 6 |
| 1908781 | B 1 10070 | 2 E 14 |
| 1908800 | A 7 10100 | 2 A 18 |
| 1908806 | F 2 80000 | 3 A 19 |
| 1908858 | F 2 40000 | 2 L 6 |
| | F 2 40050 | 2 L 8 |
| 1908865 | C 1 10065 | 2 H 10 |
| 1908871 | F 2 51200 | 2 L 23 |
| | F 2 51250 | 3 A 9 |
| 1908891 | A 1 10575 | 1 A 23 |
| 1908902 | A 1 10550 | 1 A 21 |
| 1908903 | A 1 10550 | 1 A 21 |
| 1908929 | B 1 10070 | 2 E 14 |
| 1908936 | A 1 10550 | 1 A 21 |
| | A 1 10575 | 1 A 23 |
| 1908943 | B 4 10050 | 2 G 6 |
| 1909003 | A 1 20125 | 1 B 20 |
| 1909047 | F 2 96370 | 3 B 24 |
| | F 2 96400 | 3 C 2 |
| | F 2 96470 | 3 C 4 |
| | F 2 96500 | 3 C 6 |
| | F 2 96550 | 3 C 8 |
| | F 2 96800 | 3 C 18 |
| | F 2 96900 | 3 C 22 |
| 1909062 | F 2 96370 | 3 B 24 |
| | F 2 96750 | 3 C 16 |
| | F 2 96880 | 3 C 20 |
| 1909079 | F 2 96370 | 3 B 24 |
| 1909080 | F 2 96470 | 3 C 4 |
| 1909212 | G 2 10000 | 3 D 10 |
| 1909213 | G 2 10000 | 3 D 10 |
| 1909215 | B 4 10050 | 2 G 6 |
| | B 4 10065 | 2 G 8 |
| | B 4 10070 | 2 G 10 |
| 1909246 | G 5 10000 | 3 D 22 |

| Part No. | Group No. | Microfiche Loc. |
|---|---|---|
| 1909247 | G 5 10000 | 3 D 22 |
| 1909248 | G 5 10000 | 3 D 22 |
| 1909249 | G 5 10000 | 3 D 22 |
| 1909250 | G 5 10000 | 3 D 22 |
| 1909256 | G 1 10000 | 3 D 6 |
| 1909257 | G 1 10000 | 3 D 6 |
| 1909260 | G 1 10000 | 3 D 6 |
| 1909264 | G 1 10000 | 3 D 6 |
| 1909266 | G 1 10000 | 3 D 6 |
| 1909414 | B 1 20050 | 2 F 2 |
| 1909533 | A 1 10305 | 1 A 9 |
| | A 1 10320 | 1 A 13 |
| | A 1 10330 | 1 A 15 |
| 1909557 | B 4 10050 | 2 G 6 |
| | B 4 10070 | 2 G 10 |
| | B 4 10130 | 2 G 14 |
| 1909583 | A 1 10500 | 1 A 19 |
| 1909614 | F 2 10100 | 2 L 2 |
| 1909627 | B 4 10050 | 2 G 6 |
| 1909699 | C 1 10065 | 2 H 10 |
| | F 2 40050 | 2 L 8 |
| 1909742 | A 9 20200 | 2 D 18 |
| 1909745 | A 9 20200 | 2 D 18 |
| | A 10 20150 | 2 E 6 |
| 1909793 | C 1 10065 | 2 H 10 |
| 1909803 | F 1 10045 | 2 K 4 |
| 1909816 | A 3 20050 | 1 E 22 |
| 1909817 | A 3 20050 | 1 E 22 |
| 1909834 | A 3 15150 | 1 E 18 |
| 1909838 | A 1 15200 | 1 B 12 |
| 1909840 | A 1 15060 | 1 B 6 |
| 1909875 | A 7 15450 | 2 B 18 |
| 1909876 | A 7 15450 | 2 B 18 |
| 1909878 | A 7 15450 | 2 B 18 |
| 1909947 | A 9 20200 | 2 D 18 |
| 1909978 | F 2 51250 | 3 A 9 |
| 1909979 | F 2 51250 | 3 A 9 |
| 1909980 | F 2 51250 | 3 A 9 |
| 1909985 | F 2 51250 | 3 A 9 |
| 1909992 | F 2 51080 | 2 L 19 |
| | F 2 51250 | 3 A 9 |
| 1911507 | F 1 20350 | 2 K 18 |
| | F 2 51080 | 2 L 19 |
| 1911508 | F 2 51080 | 2 L 19 |
| | F 2 51250 | 3 A 9 |
| 1911511 | F 2 51080 | 2 L 19 |
| 1911514 | A 1 10305 | 1 A 9 |
| | A 1 10320 | 1 A 13 |
| | A 1 10550 | 1 A 21 |
| | A 1 10575 | 1 A 23 |
| 1911520 | A 1 10305 | 1 A 9 |
| | A 1 10320 | 1 A 13 |
| | A 1 10330 | 1 A 15 |
| | A 1 10600 | 1 B 2 |
| 1911522 | A 1 10305 | 1 A 9 |
| | A 1 10320 | 1 A 13 |
| | A 1 10330 | 1 A 15 |
| | A 1 10600 | 1 B 2 |
| 1911528 | A 5 50050 | 1 J 16 |
| | A 5 60025 | 1 J 20 |
| 1911538 | A 5 30100 | 1 I 22 |
| 1911539 | A 5 20050 | 1 I 18 |
| 1911542 | A 5 10050 | 1 I 10 |
| 1911543 | A 5 40475 | 1 J 10 |
| 1911570 | A 8 10130 | 2 C 22 |
| 1911571 | F 2 90050 | 3 B 2 |
| 1911580 | A 9 10060 | 2 D 2 |
| 1911588 | A 9 20200 | 2 D 18 |
| | A 10 20150 | 2 E 6 |
| 1911589 | A 9 20200 | 2 D 18 |
| 1911801 | A 7 15350 | 2 B 14 |
| 1911977 | F 2 96880 | 3 C 20 |
| 1913522 | A 7 15450 | 2 B 18 |
| | A 7 40150 | 2 C 6 |
| 1913562 | A 7 15450 | 2 B 18 |
| 1913562 | A 7 40150 | 2 C 6 |
| 1913567 | C 1 10065 | 2 H 10 |
| | F 2 40050 | 2 L 8 |
| 1913569 | F 2 40050 | 2 L 8 |
| 1913574 | F 2 40050 | 2 L 8 |
| 1913575 | F 2 40050 | 2 L 8 |
| 1913583 | F 2 40050 | 2 L 8 |
| 1913591 | A 5 40250 | 1 J 6 |
| 1913645 | A 7 15200 | 2 B 8 |
| 1913742 | F 2 60050 | 3 A 14 |
| 1913760 | C 1 10040 | 2 H 6 |
| 1913761 | C 1 10040 | 2 H 6 |
| 1913767 | F 2 90050 | 3 B 2 |
| 1913801 | A 1 10550 | 1 A 21 |
| | A 1 10575 | 1 A 23 |
| 1913817 | A 1 15250 | 1 B 16 |
| 1913819 | A 3 20100 | 1 E 24 |
| 1913859 | A 1 10320 | 1 A 13 |
| | A 1 10550 | 1 A 21 |
| | A 1 10575 | 1 A 23 |
| 1913862 | A 1 10500 | 1 A 19 |
| | A 1 10550 | 1 A 21 |
| | A 1 10575 | 1 A 23 |
| | A 1 10600 | 1 B 2 |
| 1913891 | B 1 20175 | 2 F 6 |
| 1913913 | G 2 10000 | 3 D 10 |
| | G 4 10000 | 3 D 18 |
| | G 5 10000 | 3 D 22 |
| | G 6 10000 | 3 E 2 |
| 1913923 | B 5 10045 | 2 G 18 |
| 1914040 | G 3 10000 | 3 D 14 |
| 1914075 | F 2 40050 | 2 L 8 |
| 1914211 | F 1 10045 | 2 K 4 |
| 1914213 | F 1 10045 | 2 K 4 |
| 1914217 | F 2 50060 | 2 L 12 |
| 1914232 | A 1 15250 | 1 B 16 |
| 1914233 | A 1 15250 | 1 B 16 |
| 1914237 | B 4 10050 | 2 G 6 |
| | B 4 10065 | 2 G 8 |
| | B 4 10070 | 2 G 10 |
| 1914240 | A 7 25000 | 2 B 22 |
| 1914243 | A 9 10060 | 2 D 2 |
| 1914255 | F 2 96470 | 3 C 4 |
| | F 2 96600 | 3 C 10 |
| | F 2 96650 | 3 C 12 |
| | F 2 96700 | 3 C 14 |
| | F 2 96750 | 3 C 16 |
| | F 2 96880 | 3 C 20 |
| | F 2 96900 | 3 C 22 |
| | F 2 96980 | 3 D 2 |
| | F 2 97000 | 3 D 4 |
| 1914284 | G 2 10000 | 3 D 10 |
| | G 3 10000 | 3 D 14 |
| | G 4 10000 | 3 D 18 |
| 1914340 | A 1 10305 | 1 A 9 |
| | A 1 10320 | 1 A 13 |
| | A 1 10330 | 1 A 15 |
| | A 1 10500 | 1 A 19 |
| | A 1 10550 | 1 A 21 |
| | A 1 10575 | 1 A 23 |
| | A 1 10600 | 1 B 2 |
| 1914390 | B 1 10070 | 2 E 14 |
| 1914660 | F 2 96650 | 3 C 12 |
| | F 2 97000 | 3 D 4 |
| 1914662 | F 2 96500 | 3 C 6 |
| | F 2 96900 | 3 C 22 |
| 1914666 | F 2 96400 | 3 C 2 |
| | F 2 96800 | 3 C 18 |
| 1914678 | A 10 20150 | 2 E 6 |
| 1914717 | F 2 96880 | 3 C 20 |
| 1914725 | A 10 20150 | 2 E 6 |
| 1914728 | A 10 20150 | 2 E 6 |
| 1914731 | A 10 20150 | 2 E 6 |
| 1914780 | A 3 20100 | 1 E 24 |
| 1914783 | A 3 20100 | 1 E 24 |

| Part No. | Group No. | Microfiche Loc. |
|---|---|---|
| 1914789 | A 3 20100 | 1 E 24 |
| 1914791 | A 3 20100 | 1 E 24 |
| 1914817 | A 7 15450 | 2 B 18 |
| | A 7 40150 | 2 C 6 |
| 1914824 | A 1 15250 | 1 B 16 |
| 1914825 | A 1 15250 | 1 B 16 |
| 1914827 | G 6 10000 | 3 E 2 |
| 1914828 | G 6 10000 | 3 E 2 |
| 1914830 | G 6 10000 | 3 E 2 |
| 1914831 | G 6 10000 | 3 E 2 |
| 1914832 | G 6 10000 | 3 E 2 |
| 1914833 | G 6 10000 | 3 E 2 |
| 1914834 | G 6 10000 | 3 E 2 |
| 1914835 | G 6 10000 | 3 E 2 |
| 1914836 | G 6 10000 | 3 E 2 |
| 1914837 | G 6 10000 | 3 E 2 |
| 1914877 | G 2 10000 | 3 D 10 |
| 1914880 | G 2 10000 | 3 D 10 |
| 1914882 | G 2 10000 | 3 D 10 |
| 1914884 | G 2 10000 | 3 D 10 |
| 1914886 | G 2 10000 | 3 D 10 |
| 1914887 | G 2 10000 | 3 D 10 |
| 1914888 | G 2 10000 | 3 D 10 |
| 1914891 | G 2 10000 | 3 D 10 |
| 1914926 | G 6 10000 | 3 E 2 |
| 1914969 | A 1 10305 | 1 A 9 |
| | A 1 10320 | 1 A 13 |
| | A 1 10330 | 1 A 15 |
| | A 1 10600 | 1 B 2 |
| 1914970 | A 1 10305 | 1 A 9 |
| | A 1 10320 | 1 A 13 |
| | A 1 10330 | 1 A 15 |
| | A 1 10600 | 1 B 2 |
| 1914972 | B 1 10070 | 2 E 14 |
| | F 1 10045 | 2 K 4 |
| 1914976 | G 4 10000 | 3 D 18 |
| 1914977 | G 4 10000 | 3 D 18 |
| 1914979 | G 4 10000 | 3 D 18 |
| 1914980 | G 4 10000 | 3 D 18 |
| 1914981 | G 4 10000 | 3 D 18 |
| 1914982 | G 4 10000 | 3 D 18 |
| 1914984 | G 3 10000 | 3 D 14 |
| 1914986 | G 3 10000 | 3 D 14 |
| 1914987 | G 3 10000 | 3 D 14 |
| 1914988 | G 3 10000 | 3 D 14 |
| 1914991 | G 3 10000 | 3 D 14 |
| 1914994 | G 3 10000 | 3 D 14 |
| 1914995 | G 3 10000 | 3 D 14 |
| 1914997 | G 4 10000 | 3 D 18 |
| 1914998 | G 4 10000 | 3 D 18 |
| 1915000 | G 4 10000 | 3 D 18 |
| 1915001 | G 4 10000 | 3 D 18 |
| 1915002 | G 4 10000 | 3 D 18 |
| 1915003 | G 4 10000 | 3 D 18 |
| 1915005 | G 2 10000 | 3 D 10 |
| 1915006 | G 2 10000 | 3 D 10 |
| 1915009 | G 2 10000 | 3 D 10 |
| 1915011 | G 3 10000 | 3 D 14 |
| 1915012 | G 3 10000 | 3 D 14 |
| 1915013 | G 3 10000 | 3 D 14 |
| 1915014 | G 3 10000 | 3 D 14 |
| 1915017 | G 3 10000 | 3 D 14 |
| 1915018 | G 3 10000 | 3 D 14 |
| 1915022 | G 1 10000 | 3 D 6 |
| 1915023 | G 1 10000 | 3 D 6 |
| 1915027 | G 1 10000 | 3 D 6 |
| 1915028 | G 1 10000 | 3 D 6 |
| 1915029 | G 1 10000 | 3 D 6 |
| 1915030 | G 1 10000 | 3 D 6 |
| 1915033 | G 3 10000 | 3 D 14 |
| 1915035 | G 3 10000 | 3 D 14 |
| 1915037 | G 3 10000 | 3 D 14 |
| 1915039 | G 3 10000 | 3 D 14 |
| 1915040 | A 1 10305 | 1 A 9 |
| | A 1 10320 | 1 A 13 |

| Part No. | Group No. | Microfiche Loc. |
|---|---|---|
| 1915040 | A 1 10330 | 1 A 15 |
| | A 1 10600 | 1 B 2 |
| 1915042 | G 3 10000 | 3 D 14 |
| 1915044 | G 3 10000 | 3 D 14 |
| 1915046 | G 3 10000 | 3 D 14 |
| 1915047 | G 3 10000 | 3 D 14 |
| 1915050 | G 3 10000 | 3 D 14 |
| 1915051 | G 3 10000 | 3 D 14 |
| 1915054 | G 3 10000 | 3 D 14 |
| 1915055 | G 3 10000 | 3 D 14 |
| 1915057 | G 3 10000 | 3 D 14 |
| 1915059 | G 3 10000 | 3 D 14 |
| 1915061 | G 3 10000 | 3 D 14 |
| 1915062 | G 3 10000 | 3 D 14 |
| 1915064 | G 3 10000 | 3 D 14 |
| 1915065 | G 3 10000 | 3 D 14 |
| 1915066 | G 3 10000 | 3 D 14 |
| 1915070 | G 3 10000 | 3 D 14 |
| 1915072 | G 3 10000 | 3 D 14 |
| 1915075 | A 1 25100 | 1 C 6 |
| 1915076 | G 3 10000 | 3 D 14 |
| 1915077 | G 5 10000 | 3 D 22 |
| 1915078 | G 1 10000 | 3 D 6 |
| 1915079 | G 1 10000 | 3 D 6 |
| 1915082 | G 1 10000 | 3 D 6 |
| 1915095 | F 1 10045 | 2 K 4 |
| 1915102 | G 1 10000 | 3 D 6 |
| 1915103 | A 1 10305 | 1 A 9 |
| | A 1 10550 | 1 A 21 |
| 1915134 | E 2 30650 | 2 J 9 |
| 1915174 | D 1 10090 | 2 H 14 |
| 1915176 | G 4 10000 | 3 D 18 |
| 1915177 | G 4 10000 | 3 D 18 |
| 1915184 | A 1 15060 | 1 B 6 |
| 1915187 | A 1 10575 | 1 A 23 |
| 1915188 | A 1 10305 | 1 A 9 |
| | A 1 10320 | 1 A 13 |
| | A 1 10330 | 1 A 15 |
| 1915191 | A 1 15250 | 1 B 16 |
| 1915200 | G 3 10000 | 3 D 14 |
| 1915203 | G 3 10000 | 3 D 14 |
| 1915205 | B 1 10045 | 2 E 12 |
| | B 1 10070 | 2 E 14 |
| | B 3 10010 | 2 G 2 |
| | E 1 10020 | 2 I 4 |
| | E 1 10040 | 2 I 6 |
| 1915214 | B 1 10045 | 2 E 12 |
| | B 1 10070 | 2 E 14 |
| 1915219 | E 2 70000 | 2 J 20 |
| 1915221 | E 2 70000 | 2 J 19 |
| 1915222 | B 3 10010 | 2 G 2 |
| | E 1 10010 | 2 I 2 |
| 1915236 | G 3 10000 | 3 D 14 |
| 1915243 | B 4 10050 | 2 G 6 |
| 1915245 | B 4 10050 | 2 G 6 |
| | G 3 10000 | 3 D 14 |
| 1915267 | B 4 10050 | 2 G 6 |
| | B 4 10065 | 2 G 8 |
| | B 4 10070 | 2 G 10 |
| 1915296 | A 1 10600 | 1 B 2 |
| 1915298 | A 10 10030 | 2 D 22 |
| 1915299 | A 10 12000 | 2 E 2 |
| 1915300 | A 10 10030 | 2 D 22 |
| 1915301 | A 10 12000 | 2 E 2 |
| 1915302 | A 10 10030 | 2 D 22 |
| 1915303 | A 10 10030 | 2 D 22 |
| 1915344 | B 4 10070 | 2 G 10 |
| 1915346 | A 10 20150 | 2 E 6 |
| 1915347 | A 9 14000 | 2 D 6 |
| 1915349 | A 9 14000 | 2 D 6 |
| 1915352 | A 9 14000 | 2 D 6 |
| 1915353 | A 9 10060 | 2 D 2 |
| | A 9 14000 | 2 D 6 |
| 1915354 | A 9 14000 | 2 D 6 |
| 1915375 | B 1 20175 | 2 F 6 |

| Part No. | Group No. | Microfiche Loc. |
|---|---|---|
| 1915382 | B 1 20175 | 2 F 6 |
| 1915388 | E 2 50000 | 2 J 15 |
| 1915391 | A 9 14000 | 2 D 6 |
| 1915392 | A 9 14000 | 2 D 6 |
| 1915393 | A 9 14000 | 2 D 6 |
| 1915423 | B 1 20175 | 2 F 6 |
| 1915428 | B 1 20175 | 2 F 6 |
| 1915429 | A 9 14000 | 2 D 6 |
| 1915436 | D 1 10090 | 2 H 14 |
| 1915462 | B 1 20175 | 2 F 6 |
| 1915482 | B 1 20175 | 2 F 6 |
| 1915526 | B 1 20175 | 2 F 6 |
| 1915542 | A 9 14000 | 2 D 6 |
| 1915566 | A 10 20150 | 2 E 6 |
| 1915569 | A 9 14000 | 2 D 6 |
| 1915631 | A 9 14000 | 2 D 6 |
| 1915658 | A 9 14000 | 2 D 6 |
| 1915696 | A 10 12000 | 2 E 2 |
| 1915715 | A 9 14000 | 2 D 6 |
| 1915756 | A 9 10060 | 2 D 2 |
| 1915771 | A 3 20100 | 1 E 24 |
| 1915773 | A 3 20100 | 1 E 24 |
| 1915775 | A 3 20100 | 1 E 24 |
| 1915777 | A 3 20100 | 1 E 24 |
| 1915780 | A 3 20100 | 1 E 24 |
| 1915785 | A 3 20100 | 1 E 24 |
| 1915786 | B 1 10045 | 2 E 12 |
| | B 1 10070 | 2 E 14 |
| | E 1 10020 | 2 I 4 |
| | E 1 10040 | 2 I 6 |
| 1915983 | A 3 15150 | 1 E 18 |
| 1916034 | A 3 20100 | 1 E 24 |
| 1916060 | A 3 20100 | 1 E 24 |
| 1916061 | A 3 20100 | 1 E 24 |
| 1916062 | A 3 20100 | 1 E 24 |
| 1916087 | A 1 10600 | 1 B 2 |
| 1916142 | F 2 50060 | 2 L 12 |
| 1916232 | E 1 13050 | 2 I 18 |
| 1916233 | E 1 13000 | 2 I 14 |
| 1916441 | B 5 10045 | 2 G 18 |
| 1916442 | A 7 15100 | 2 B 2 |
| | A 7 15150 | 2 B 6 |
| | A 7 15200 | 2 B 8 |
| | A 7 15350 | 2 B 14 |
| | A 7 15450 | 2 B 18 |
| 1916476 | C 1 10065 | 2 H 10 |
| 1916648 | F 2 96900 | 3 C 22 |
| 1916685 | A 7 10150 | 2 A 22 |
| 1916718 | A 7 15100 | 2 B 2 |
| | A 7 15150 | 2 B 6 |
| | A 7 15200 | 2 B 8 |
| | A 7 15350 | 2 B 14 |
| | A 7 15400 | 2 B 16 |
| | A 7 15450 | 2 B 18 |
| 1916765 | A 7 15300 | 2 B 12 |
| | A 7 15350 | 2 B 14 |
| | A 7 15450 | 2 B 18 |
| 1916841 | A 7 15450 | 2 B 18 |
| 1916850 | A 7 15150 | 2 B 6 |
| 1916858 | H 1 10050 | 3 E 6 |
| 1916860 | H 1 10050 | 3 E 6 |
| 1916861 | H 1 10050 | 3 E 6 |
| 1916862 | H 1 10050 | 3 E 6 |
| 1916863 | H 1 10050 | 3 E 6 |
| 1916864 | H 1 10050 | 3 E 6 |
| 1916865 | H 1 10050 | 3 E 6 |
| 1916868 | H 1 10050 | 3 E 6 |
| 1916872 | H 1 10050 | 3 E 6 |
| 1916891 | | |
| 1916920 | A 10 12000 | 2 E 2 |
| | E 2 70000 | 2 J 19 |
| 1916922 | A 1 10320 | 1 A 13 |
| | A 1 10575 | 1 A 23 |
| 1916923 | B 1 10070 | 2 E 14 |
| 1916955 | H 1 10050 | 3 E 6 |
| 1916963 | A 8 10050 | 2 C 14 |
| | A 8 10110 | 2 C 18 |
| | A 8 10130 | 2 C 22 |
| 1916969 | A 6 11010 | 1 K 2 |
| 1916985 | A 3 20100 | 1 E 24 |
| 1916989 | A 3 20100 | 1 E 24 |
| 1916992 | A 7 50050 | 2 C 10 |
| 1916993 | A 7 50050 | 2 C 10 |
| 1916994 | A 7 50050 | 2 C 10 |
| 1917008 | F 2 51080 | 2 L 19 |
| 1917034 | F 2 51080 | 2 L 19 |
| 1917035 | F 2 51080 | 2 L 19 |
| 1917036 | F 2 51080 | 2 L 19 |
| 1917095 | B 1 20050 | 2 F 2 |
| 1917182 | A 1 25100 | 1 C 6 |
| 1917187 | B 4 10050 | 2 G 6 |
| | B 4 10065 | 2 G 8 |
| | B 4 10070 | 2 G 10 |
| 1917198 | A 7 15200 | 2 B 8 |
| 1917199 | A 7 15200 | 2 B 8 |
| 1917296 | A 7 50050 | 2 C 10 |
| 1917298 | A 7 50050 | 2 C 10 |
| 1917299 | A 7 50050 | 2 C 10 |
| 1917340 | A 9 10060 | 2 D 2 |
| 1917429 | F 2 40050 | 2 L 8 |
| 1917430 | F 2 40050 | 2 L 8 |
| 1917455 | A 9 16050 | 2 D 10 |
| 1917496 | F 2 50105 | 2 L 15 |
| 1917680 | A 3 20100 | 1 E 24 |
| 1917682 | C 1 10065 | 2 H 10 |
| 1917706 | A 9 16050 | 2 D 10 |
| 1917707 | A 9 16050 | 2 D 10 |
| 1917710 | C 1 10065 | 2 H 10 |
| 1917720 | F 2 50060 | 2 L 12 |
| 1917793 | B 4 10130 | 2 G 14 |
| 1917836 | F 2 50105 | 2 L 15 |
| 1917970 | A 1 10600 | 1 B 2 |
| 1917971 | A 1 10600 | 1 B 2 |
| 1918518 | A 1 10600 | 1 B 2 |
| 1918592 | B 4 10070 | 2 G 10 |
| 1918954 | A 9 10060 | 2 D 2 |
| 1919010 | A 1 15250 | 1 B 16 |
| 1919062 | A 7 15200 | 2 B 8 |
| 1919071 | B 3 10010 | 2 G 2 |
| 1919122 | D 1 10040 | 2 H 12 |
| | D 1 10090 | 2 H 14 |
| 1919370 | E 1 13050 | 2 I 18 |
| 1919402 | A 7 50050 | 2 C 10 |
| 1919403 | A 7 50050 | 2 C 10 |
| 1919500 | D 1 10040 | 2 H 12 |
| | D 1 10090 | 2 H 14 |
| 1919557 | B 4 10065 | 2 G 8 |
| 1919766 | B 1 10070 | 2 E 14 |
| 1919809 | A 7 15400 | 2 B 16 |
| 1919811 | A 7 15400 | 2 B 16 |
| 1919897 | B 1 15070 | 2 E 18 |
| 1919915 | D 1 10040 | 2 H 12 |
| 1919916 | D 1 10040 | 2 H 12 |
| 1919951 | A 6 11010 | 1 K 2 |
| 1919962 | | |
| 1920078 | B 1 15070 | 2 E 18 |
| 1920149 | | |
| 1920302 | A 7 50050 | 2 C 10 |
| 1920970 | H 1 10050 | 3 E 6 |
| 1920971 | A 7 15400 | 2 B 16 |
| 1920974 | A 7 15400 | 2 B 16 |
| 1920975 | A 7 15400 | 2 B 16 |
| 1920995 | A 9 10060 | 2 D 2 |
| 1921048 | H 1 10050 | 3 E 6 |
| 1921049 | H 1 10050 | 3 E 6 |
| 1921050 | H 1 10050 | 3 E 6 |
| 1921051 | H 1 10050 | 3 E 6 |
| 1921052 | H 1 10050 | 3 E 6 |
| 1921053 | H 1 10050 | 3 E 6 |
| 1921275 | A 1 15060 | 1 B 6 |

| Part No. | Group No. | Microfiche Loc. |
|---|---|---|
| 1921429 | H 1 10050 | 3 E 6 |
| 1921430 | H 1 10050 | 3 E 6 |
| 1921450 | F 2 60050 | 3 A 14 |
| 1921454 | F 2 60050 | 3 A 14 |
| 1921457 | F 2 60050 | 3 A 14 |
| 1921458 | F 2 60050 | 3 A 14 |
| 1921908 | A 7 15200 | 2 B 8 |
| 1921909 | A 7 15200 | 2 B 8 |
| 1922459 | A 1 10330 | 1 A 15 |
| | A 1 10600 | 1 B 2 |
| 1922528 | A 1 10330 | 1 A 15 |
| | A 1 10600 | 1 B 2 |
| 1922529 | A 1 10600 | 1 B 2 |
| 1922531 | A 1 10330 | 1 A 15 |
| 1922597 | J 1 20000 | 3 F 3 |
| 1922792 | F 2 60050 | 3 A 14 |
| 1922815 | B 4 10050 | 2 G 6 |
| | B 4 10065 | 2 G 8 |
| | B 4 10070 | 2 G 10 |
| | B 4 10130 | 2 G 14 |
| 1922838 | F 2 60050 | 3 A 14 |
| 1922839 | F 2 60050 | 3 A 14 |
| 1922855 | F 2 60050 | 3 A 14 |
| 1922862 | F 2 60050 | 3 A 14 |
| 1922863 | F 2 60050 | 3 A 14 |
| 1922864 | F 2 60050 | 3 A 14 |
| 1922884 | F 2 60050 | 3 A 14 |
| 1922885 | F 2 60050 | 3 A 14 |
| 1922886 | F 2 60050 | 3 A 14 |
| 1922918 | B 4 10065 | 2 G 8 |
| | B 4 10070 | 2 G 10 |
| 1922919 | B 4 10065 | 2 G 8 |
| | B 4 10070 | 2 G 10 |
| 1922932 | B 4 10065 | 2 G 8 |
| 1922934 | B 4 10065 | 2 G 8 |
| 1922961 | B 4 10065 | 2 G 8 |
| 1922969 | F 1 20350 | 2 K 18 |
| 1922971 | F 1 20350 | 2 K 18 |
| 1922981 | B 4 10070 | 2 G 10 |
| 1922984 | B 4 10065 | 2 G 8 |
| 1922992 | B 4 10065 | 2 G 8 |
| 1923059 | B 4 10070 | 2 G 10 |
| 1923075 | B 1 16000 | 2 E 22 |
| 1923628 | B 5 10045 | 2 G 18 |
| 1923640 | C 1 10065 | 2 H 10 |
| 1923871 | B 1 10070 | 2 E 14 |
| 1923914 | G 3 10000 | 3 D 14 |
| 1923921 | A 10 12000 | 2 E 2 |
| 1923939 | F 2 60050 | 3 A 14 |
| 1923960 | B 3 10010 | 2 G 2 |
| 1924106 | F 2 60050 | 3 A 14 |
| 1924108 | F 2 60050 | 3 A 14 |
| 1924109 | F 2 60050 | 3 A 14 |
| 1924110 | F 2 60050 | 3 A 14 |
| 1924117 | F 2 60050 | 3 A 14 |
| 1924246 | A 7 15400 | 2 B 16 |
| 1924485 | A 7 15400 | 2 B 16 |
| 1924487 | A 5 40150 | 1 J 2 |
| 1924630 | E 2 40000 | 2 J 13 |
| 1924638 | H 1 10050 | 3 E 6 |
| 1924659 | H 1 10050 | 3 E 6 |
| 1924661 | H 1 10050 | 3 E 6 |
| 1924669 | H 1 10050 | 3 E 6 |
| 1925425 | A 7 50050 | 2 C 10 |
| 1925428 | A 5 40500 | 1 J 12 |
| 1926324 | A 7 15400 | 2 B 16 |
| 1926421 | A 7 15400 | 2 B 16 |
| 1926869 | A 7 15400 | 2 B 16 |
| 1926961 | A 1 10305 | 1 A 9 |
| | A 1 10320 | 1 A 13 |
| | A 1 10330 | 1 A 15 |
| | A 1 10500 | 1 A 19 |
| | A 1 10550 | 1 A 21 |
| | A 1 10575 | 1 A 23 |
| | A 1 10600 | 1 B 2 |
| 1926962 | F 2 40050 | 2 L 8 |
| 1927527 | F 2 60050 | 3 A 14 |
| 1927531 | A 7 10050 | 2 A 16 |
| 1927693 | A 7 10200 | 2 A 24 |
| 1928246 | A 6 11010 | 1 K 2 |
| 1928247 | A 6 11010 | 1 K 2 |
| 1928248 | A 6 11010 | 1 K 2 |
| 1928845 | E 1 10020 | 2 I 4 |
| | E 1 10040 | 2 I 6 |
| | E 1 12000 | 2 I 12 |
| 1929283 | H 1 10050 | 3 E 6 |
| 1929327 | F 2 60050 | 3 A 14 |
| 1929329 | F 2 60050 | 3 A 14 |
| 1929732 | F 2 60050 | 3 A 14 |
| 1929816 | | |
| 1930006 | F 2 60050 | 3 A 14 |
| 1930079 | A 9 20200 | 2 D 18 |
| 1930498 | B 1 20175 | 2 F 6 |
| 1930580 | D 1 20080 | 2 H 18 |
| 1931218 | J 1 20000 | 3 F 3 |
| 1931327 | F 2 60050 | 3 A 14 |
| 1931401 | E 2 70000 | 2 J 19 |
| 1932689 | F 2 60050 | 3 A 14 |
| 1932775 | F 2 60050 | 3 A 14 |
| 1934687 | F 2 60050 | 3 A 14 |
| 1935453 | B 2 10000 | 2 F 22 |
| 1937129 | B 2 10000 | 2 F 22 |
| 1937131 | B 2 10000 | 2 F 22 |
| 1937132 | B 2 10000 | 2 F 22 |
| 1937427 | E 2 30200 | 2 J 7 |
| 1937784 | F 2 60050 | 3 A 14 |
| 1938453 | F 2 60050 | 3 A 14 |
| 1938931 | E 2 70000 | 2 J 20 |
| 1990001 | A 6 16000 | 1 K 13 |
| 1990002 | A 6 20000 | 1 L 2 |
| 1990003 | A 6 20000 | 1 L 2 |
| 1990007 | A 6 20000 | 1 L 2 |
| 1990008 | A 6 20000 | 1 L 2 |
| 1990009 | A 6 20000 | 1 L 2 |
| 1990010 | A 6 16000 | 1 K 13 |
| 1990011 | A 6 16000 | 1 K 13 |
| 1990012 | A 6 20000 | 1 L 2 |
| 1990014 | A 6 20000 | 1 L 2 |
| 1990015 | A 6 20000 | 1 L 2 |
| 1990016 | A 6 20000 | 1 L 2 |
| 1990017 | A 6 20000 | 1 L 2 |
| 1990018 | A 6 20000 | 1 L 2 |
| 1990019 | A 6 16000 | 1 K 13 |
| 1990020 | A 6 20000 | 1 L 2 |
| 1990021 | A 6 20000 | 1 L 2 |
| 1990022 | A 6 16000 | 1 K 13 |
| 1990023 | A 6 16000 | 1 K 13 |
| 1990024 | A 6 16000 | 1 K 13 |
| 1990026 | A 6 18000 | 1 K 19 |
| 1990027 | A 6 18000 | 1 K 19 |
| 1990028 | A 6 17000 | 1 K 15 |
| 1990029 | A 6 17000 | 1 K 15 |
| 1990030 | A 6 18000 | 1 K 19 |
| 1990031 | A 6 18000 | 1 K 19 |
| 1990034 | A 6 16000 | 1 K 13 |
| 1990035 | A 6 17000 | 1 K 15 |
| 1990036 | A 6 17000 | 1 K 15 |
| 1990037 | A 6 16000 | 1 K 13 |
| 1990038 | A 6 19000 | 1 K 23 |
| 1990039 | A 6 17000 | 1 K 15 |
| 1990040 | A 6 17000 | 1 K 15 |
| 1990041 | A 6 17000 | 1 K 15 |
| 1990044 | A 6 17000 | 1 K 15 |
| 1990045 | A 6 19000 | 1 K 23 |
| 1990046 | A 6 20000 | 1 L 2 |
| 1990047 | A 6 19000 | 1 K 23 |
| 1990049 | A 6 17000 | 1 K 15 |
| 1990051 | A 6 17000 | 1 K 15 |
| 1990054 | A 6 16000 | 1 K 13 |

| Part No. | Group No. | Microfiche Loc. |
|---|---|---|
| 1990055 | A 6 18000 | 1 K 19 |
| 1990056 | A 6 18000 | 1 K 19 |
| 1990057 | A 6 18000 | 1 K 19 |
| 1990060 | A 6 20000 | 1 L 2 |
| 1990061 | A 6 16000 | 1 K 13 |
| 1990063 | A 6 17000 | 1 K 15 |
| 1990064 | A 6 17000 | 1 K 15 |
| 1990065 | A 6 17000 | 1 K 15 |
| 1990066 | A 6 17000 | 1 K 15 |
| 1990067 | A 6 17000 | 1 K 15 |
| 1990068 | A 6 17000 | 1 K 15 |
| | A 6 19000 | 1 K 23 |
| 1990070 | A 6 18000 | 1 K 19 |
| 1990071 | A 6 18000 | 1 K 19 |
| 1990073 | A 6 19000 | 1 K 23 |
| 1990074 | A 6 19000 | 1 K 23 |
| 1990076 | A 6 19000 | 1 K 23 |
| 1990077 | A 6 19000 | 1 K 23 |
| 1990078 | A 6 19000 | 1 K 23 |
| 1990079 | A 6 19000 | 1 K 23 |
| 1990080 | A 6 18000 | 1 K 19 |
| 1990081 | A 6 16000 | 1 K 13 |
| 1990082 | A 6 19000 | 1 K 23 |
| 1990085 | A 6 19000 | 1 K 23 |
| 1990087 | A 6 19000 | 1 K 23 |
| 1990088 | A 6 19000 | 1 K 23 |
| 1990095 | A 6 21050 | 1 L 6 |
| 1990096 | A 6 19000 | 1 K 23 |
| 1990099 | A 6 20000 | 1 L 2 |
| 1990104 | A 5 40475 | 1 J 10 |
| 1990105 | F 2 50105 | 2 L 15 |
| 1990106 | F 2 50060 | 2 L 12 |
| | F 2 50105 | 2 L 15 |
| 1990109 | F 2 50060 | 2 L 12 |
| | F 2 50105 | 2 L 15 |
| 1990111 | A 5 20050 | 1 I 18 |
| 1990114 | A 5 30100 | 1 I 22 |
| 1990117 | A 7 10000 | 2 A 14 |
| | A 7 10050 | 2 A 16 |
| 1990119 | A 7 10000 | 2 A 14 |
| | A 7 10050 | 2 A 16 |
| 1990120 | A 7 10000 | 2 A 14 |
| | A 7 10050 | 2 A 16 |
| 1990122 | A 7 10000 | 2 A 14 |
| | A 7 10050 | 2 A 16 |
| 1990124 | A 5 50050 | 1 J 16 |
| | A 5 60025 | 1 J 20 |
| 1990125 | A 5 50050 | 1 J 16 |
| | A 5 60025 | 1 J 20 |
| 1990126 | A 5 50050 | 1 J 16 |
| | A 5 60025 | 1 J 20 |
| 1990127 | A 7 10000 | 2 A 14 |
| | A 7 10050 | 2 A 16 |
| 1990128 | A 7 10000 | 2 A 14 |
| | A 7 10050 | 2 A 16 |
| 1990129 | A 7 10000 | 2 A 14 |
| | A 7 10050 | 2 A 16 |
| 1990130 | A 7 10000 | 2 A 14 |
| | A 7 10050 | 2 A 16 |
| 1990131 | A 7 10000 | 2 A 14 |
| | A 7 10050 | 2 A 16 |
| 1990134 | F 2 50060 | 2 L 12 |
| 1990135 | F 2 50060 | 2 L 12 |
| 1990137 | A 6 13000 | 1 K 7 |
| 1990138 | A 6 13000 | 1 K 7 |
| 1990139 | A 6 13000 | 1 K 7 |
| 1990140 | A 6 13000 | 1 K 7 |
| 1990141 | A 6 13000 | 1 K 7 |
| 1990142 | A 6 13000 | 1 K 7 |
| 1990144 | A 6 13000 | 1 K 7 |
| 1990145 | A 6 13000 | 1 K 7 |
| 1990147 | A 6 13000 | 1 K 7 |
| 1990148 | A 6 13000 | 1 K 7 |
| 1990149 | A 6 13000 | 1 K 7 |
| 1990152 | A 6 13000 | 1 K 7 |

| Part No. | Group No. | Microfiche Loc. |
|---|---|---|
| 1990154 | A 6 13000 | 1 K 7 |
| 1990159 | A 6 21050 | 1 L 6 |
| 1990160 | A 6 21050 | 1 L 6 |
| 1990161 | A 6 21050 | 1 L 6 |
| 1990162 | A 6 21050 | 1 L 6 |
| 1990164 | A 6 21050 | 1 L 6 |
| 1990165 | A 6 21050 | 1 L 6 |
| 1990167 | A 6 21050 | 1 L 6 |
| 1990169 | A 6 21050 | 1 L 6 |
| 1990170 | A 6 21050 | 1 L 6 |
| 1990171 | A 6 21050 | 1 L 6 |
| 1990172 | A 5 10050 | 1 I 10 |
| | A 5 10210 | 1 I 14 |
| 1990173 | E 2 30100 | 2 J 2 |
| 1990175 | E 2 30100 | 2 J 2 |
| | E 2 30650 | 2 J 9 |
| 1990176 | E 2 30650 | 2 J 9 |
| 1990177 | E 2 30100 | 2 J 2 |
| | E 2 30650 | 2 J 9 |
| 1990178 | E 2 30100 | 2 J 2 |
| | E 2 30650 | 2 J 9 |
| 1990179 | E 2 30100 | 2 J 2 |
| | E 2 30650 | 2 J 9 |
| 1990182 | E 2 30100 | 2 J 2 |
| | E 2 30650 | 2 J 9 |
| 1990183 | E 2 30100 | 2 J 2 |
| | E 2 30200 | 2 J 7 |
| | E 2 30650 | 2 J 9 |
| 1990184 | E 2 30100 | 2 J 2 |
| | E 2 30200 | 2 J 7 |
| | E 2 30650 | 2 J 9 |
| 1990185 | E 2 30100 | 2 J 2 |
| | E 2 30650 | 2 J 9 |
| 1990186 | E 2 30100 | 2 J 2 |
| 1990194 | F 2 50060 | 2 L 13 |
| | F 2 50105 | 2 L 15 |
| 1990195 | A 7 10000 | 2 A 14 |
| | A 7 10050 | 2 A 16 |
| 1990196 | F 2 50060 | 2 L 13 |
| 1990197 | A 6 13000 | 1 K 7 |
| 1990198 | A 6 13000 | 1 K 7 |
| 1990199 | A 6 13000 | 1 K 7 |
| 1990200 | A 6 13000 | 1 K 7 |
| 1990201 | A 6 13000 | 1 K 7 |
| 1990232 | A 6 16000 | 1 K 13 |
| 1990233 | A 7 10100 | 2 A 18 |
| 1990234 | A 7 10100 | 2 A 18 |
| 1990235 | A 7 10100 | 2 A 18 |
| 1990236 | A 7 10100 | 2 A 18 |
| 1990237 | A 7 10100 | 2 A 18 |
| 1990238 | A 7 10100 | 2 A 18 |
| 1990240 | A 7 10100 | 2 A 18 |
| 1990241 | A 7 10100 | 2 A 18 |
| 1990242 | A 7 10100 | 2 A 18 |
| 1990246 | A 6 17000 | 1 K 15 |
| 1990247 | A 6 17000 | 1 K 15 |
| 1990248 | A 1 25100 | 1 C 6 |
| 1990249 | A 1 25100 | 1 C 6 |
| 1990250 | A 1 25100 | 1 C 6 |
| 1990253 | A 6 18000 | 1 K 19 |
| 1990254 | A 6 20000 | 1 L 2 |
| 1990255 | A 6 16000 | 1 K 13 |
| 1990256 | A 6 19000 | 1 K 23 |
| 1990257 | A 6 13000 | 1 K 7 |
| 1990260 | A 6 21050 | 1 L 6 |
| 1990261 | A 6 21050 | 1 L 6 |
| 1990262 | E 2 30650 | 2 J 9 |
| 1990266 | E 2 30100 | 2 J 2 |
| | E 2 30200 | 2 J 7 |
| 1990270 | A 1 20125 | 1 B 20 |
| 1990272 | A 1 25200 | 1 C 10 |
| 1990273 | A 1 25200 | 1 C 10 |
| 1990274 | A 1 20150 | 1 B 24 |
| | A 1 20200 | 1 C 2 |

| Part No. | Group No. | Microfiche Loc. |
|---|---|---|
| 1990297 | E 2 30650 | 2 J 9 |
| 1990300 | F 2 50060 | 2 L 13 |
| | F 2 50105 | 2 L 15 |
| 1990391 | A 6 20000 | 1 L 2 |
| 1990398 | B 4 10130 | 2 G 14 |
| 1990399 | B 4 10130 | 2 G 14 |
| 1990402 | A 6 13000 | 1 K 7 |
| 1990403 | A 6 13000 | 1 K 7 |
| 1990404 | A 6 13000 | 1 K 7 |
| 1990430 | A 6 18000 | 1 K 19 |
| 1990434 | A 6 16000 | 1 K 13 |
| 1990435 | A 6 16000 | 1 K 13 |
| 1990436 | J 1 20000 | 3 F 3 |
| 1990471 | A 6 17000 | 1 K 15 |
| 1990472 | A 6 17000 | 1 K 15 |
| 1990474 | A 6 17000 | 1 K 15 |
| 1990476 | J 1 10000 | 3 F 1 |
| 1990499 | A 6 17000 | 1 K 15 |
| 1990501 | F 2 50105 | 2 L 15 |
| 1990502 | F 2 50105 | 2 L 15 |
| 1990503 | F 2 50060 | 2 L 13 |
| | F 2 50105 | 2 L 15 |
| 1990506 | A 6 17000 | 1 K 15 |
| 1990507 | A 6 17000 | 1 K 15 |
| 1990515 | J 1 10000 | 3 F 1 |
| 1990532 | E 2 70000 | 2 J 19 |
| 1990533 | E 2 70000 | 2 J 19 |
| 1990534 | E 2 70000 | 2 J 19 |
| 1990535 | E 2 70000 | 2 J 19 |
| 1990540 | E 2 70000 | 2 J 19 |
| 1990541 | E 2 70000 | 2 J 19 |
| 1990542 | E 2 70000 | 2 J 19 |
| 1990543 | E 2 70000 | 2 J 19 |
| 1990544 | E 2 70000 | 2 J 19 |
| 1990546 | E 2 70000 | 2 J 19 |
| 1990547 | E 2 70000 | 2 J 19 |
| 1990550 | E 2 70000 | 2 J 19 |
| 1990551 | E 2 70000 | 2 J 19 |
| 1990554 | E 2 70000 | 2 J 19 |
| 1990555 | E 2 70000 | 2 J 19 |
| 1990556 | E 2 70000 | 2 J 19 |
| 1990557 | E 2 70000 | 2 J 19 |
| 1990559 | E 2 70000 | 2 J 19 |
| 1990560 | E 2 70000 | 2 J 19 |
| 1990564 | E 2 70000 | 2 J 19 |
| 1990565 | E 2 70000 | 2 J 19 |
| 1990566 | E 2 70000 | 2 J 19 |
| 1990567 | E 2 70000 | 2 J 19 |
| 1990568 | E 2 70000 | 2 J 19 |
| 1990569 | E 2 70000 | 2 J 19 |
| 1990571 | E 2 70000 | 2 J 19 |
| 1990572 | E 2 70000 | 2 J 19 |
| 1990573 | E 2 70000 | 2 J 19 |
| 1990574 | E 2 70000 | 2 J 19 |
| 1990594 | B 6 10000 | 2 G 22 |
| 1990595 | B 6 10020 | 2 H 2 |
| 1990596 | E 2 70000 | 2 J 19 |
| 1990604 | A 7 15200 | 2 B 8 |
| | B 4 10130 | 2 G 14 |
| 1990606 | E 2 70000 | 2 J 19 |
| 1990628 | E 2 70000 | 2 J 19 |
| 1990629 | E 2 70000 | 2 J 19 |
| 1990631 | E 2 70000 | 2 J 20 |
| 1990632 | E 2 70000 | 2 J 20 |
| 1990633 | A 7 10100 | 2 A 18 |
| 1990634 | A 6 17000 | 1 K 15 |
| 1990900 | A 9 10060 | 2 D 2 |
| | D 1 10040 | 2 H 12 |
| | D 1 10090 | 2 H 14 |
| 1990901 | A 9 10060 | 2 D 2 |
| 1990901 | D 1 10040 | 2 H 12 |
| | D 1 10090 | 2 H 14 |
| 1990946 | E 2 30100 | 2 J 2 |
| 1990947 | E 2 30100 | 2 J 2 |
| 1990948 | E 2 30100 | 2 J 2 |
| | E 2 30650 | 2 J 9 |
| 1990964 | E 2 30650 | 2 J 9 |
| 1990967 | E 2 50000 | 2 J 15 |
| 1990968 | E 2 50000 | 2 J 15 |
| 1990969 | E 2 50000 | 2 J 15 |
| 1990970 | E 2 50000 | 2 J 15 |
| 1990971 | E 2 50000 | 2 J 15 |
| 1990972 | E 2 50000 | 2 J 15 |
| 1990973 | E 2 50000 | 2 J 15 |
| 1990974 | E 2 20000 | 2 I 22 |
| 1990975 | E 2 20000 | 2 I 22 |
| 1990976 | E 2 20000 | 2 I 22 |
| 1990977 | E 2 20000 | 2 I 22 |
| 1990978 | E 2 20000 | 2 I 22 |
| 1990979 | E 2 20000 | 2 I 22 |
| 1990980 | E 2 20000 | 2 I 22 |
| 1990981 | E 2 20000 | 2 I 22 |
| 1990982 | E 2 20000 | 2 I 22 |
| 1990983 | E 2 20000 | 2 I 22 |
| 1990984 | A 9 14000 | 2 D 6 |
| 1991017 | G 1 10000 | 3 D 6 |
| 1991028 | A 6 13000 | 1 K 7 |
| 1991030 | F 1 20350 | 2 K 18 |
| 1991031 | F 1 20350 | 2 K 18 |
| 1991044 | E 2 70000 | 2 J 19 |
| 1991047 | A 6 20000 | 1 L 2 |
| 1991050 | B 1 10070 | 2 E 14 |
| | B 1 15070 | 2 E 18 |
| 1991084 | E 1 10010 | 2 I 2 |
| 1991086 | E 1 10020 | 2 I 4 |
| | E 1 10040 | 2 I 6 |
| | E 1 12000 | 2 I 12 |
| 1991089 | E 1 13050 | 2 I 18 |
| 1991112 | E 2 30650 | 2 J 9 |
| 1991210 | A 7 10200 | 2 A 24 |
| 1991311 | A 5 40150 | 1 J 2 |
| 1991313 | A 5 40150 | 1 J 2 |
| 1991318 | H 1 10050 | 3 E 6 |
| 1991319 | E 2 40000 | 2 J 13 |
| 1991321 | A 7 10200 | 2 A 24 |
| 1991322 | A 7 10200 | 2 A 24 |
| 1991323 | A 7 10200 | 2 A 24 |
| 1991324 | A 7 10200 | 2 A 24 |
| 1991325 | A 7 10200 | 2 A 24 |
| 1991326 | A 7 10200 | 2 A 24 |
| 1991327 | A 7 10200 | 2 A 24 |
| 1991829 | F 2 96400 | 3 C 2 |
| | F 2 96470 | 3 C 4 |
| | F 2 96880 | 3 C 20 |
| | F 2 96900 | 3 C 22 |
| 1991830 | E 2 40000 | 2 J 13 |
| 1991831 | F 2 40000 | 2 L 6 |
| | F 2 40050 | 2 L 8 |
| 1991868 | A 6 17000 | 1 K 15 |
| 1991869 | A 6 17000 | 1 K 15 |
| 1991877 | H 1 10050 | 3 E 6 |
| 1991878 | H 1 10050 | 3 E 6 |
| 1991879 | H 1 10050 | 3 E 6 |
| 1991880 | H 1 10050 | 3 E 6 |
| 1991881 | H 1 10050 | 3 E 6 |
| 1991920 | A 6 13000 | 1 K 7 |
| 1991923 | A 6 13000 | 1 K 7 |
| 1991937 | F 2 50105 | 2 L 15 |
| 1991951 | A 5 40500 | 1 J 12 |
| 1991953 | A 5 40500 | 1 J 12 |
| 1991985 | A 1 10330 | 1 A 15 |
| 1991995 | J 1 20000 | 3 F 3 |
| 1992017 | J 1 10000 | 3 F 1 |
| 1992018 | J 1 10000 | 3 F 1 |
| 1992113 | A 7 15400 | 2 B 16 |

| Part No. | Group No. | Microfiche Loc. |
|---|---|---|
| 1992140 | J 1 10000 | 3 F 1 |
| 1992190 | E 2 30200 | 2 J 7 |
| 1992191 | E 2 30200 | 2 J 7 |
| 1992210 | A 7 15400 | 2 B 16 |
| 1992214 | J 1 50000 | 3 F 5 |
| 1992215 | J 1 50000 | 3 F 5 |
| 1992216 | J 1 50000 | 3 F 5 |
| 1992217 | J 1 50000 | 3 F 5 |
| 1992218 | A 8 10050 | 2 C 14 |
| | A 8 10110 | 2 C 18 |
| | A 8 10130 | 2 C 22 |
| 1992235 | J 1 50000 | 3 F 5 |
| 1992247 | J 1 50000 | 3 F 5 |
| 1992248 | J 1 50000 | 3 F 5 |
| 1992253 | A 5 50050 | 1 J 16 |
| | A 5 60025 | 1 J 20 |
| 1992254 | A 5 20050 | 1 I 18 |
| 1992260 | A 5 10050 | 1 I 10 |
| | A 5 10210 | 1 I 14 |
| 1992265 | A 5 40250 | 1 J 6 |
| 1992340 | J 1 10000 | 3 F 1 |
| 1992349 | E 2 70000 | 2 J 19 |
| 1992350 | E 2 70000 | 2 J 20 |
| 1992351 | E 2 70000 | 2 J 20 |
| 1992354 | J 1 20000 | 3 F 3 |
| 1992366 | J 1 50000 | 3 F 5 |
| 1992367 | J 1 50000 | 3 F 5 |
| 1992368 | J 1 50000 | 3 F 5 |
| 1992391 | E 2 30200 | 2 J 7 |
| 1992397 | E 2 30200 | 2 J 7 |
| 1992434 | E 2 30200 | 2 J 7 |
| 1992435 | E 2 30200 | 2 J 7 |
| 1992449 | J 1 10000 | 3 F 1 |
| | J 1 20000 | 3 F 3 |
| 1992450 | J 1 50000 | 3 F 5 |
| 1992453 | J 1 10000 | 3 F 1 |
| 1992457 | E 2 30200 | 2 J 7 |
| 2106470 | A 4 10600 | 1 F 6 |
| | A 4 10700 | 1 F 11 |
| 2106473 | A 4 20610 | 1 G 12 |
| | A 4 21200 | 1 H 2 |
| 2107398 | A 4 10600 | 1 F 7 |
| | A 4 10700 | 1 F 12 |
| | A 4 20610 | 1 G 12 |
| | A 4 21200 | 1 H 2 |
| 2107400 | A 4 20700 | 1 G 16 |
| 2107447 | A 4 14950 | 1 F 18 |
| | A 4 15000 | 1 F 20 |
| | A 4 15600 | 1 G 2 |
| | A 4 15610 | 1 G 4 |
| 2502452 | J 1 10000 | 3 F 1 |
| 2506407 | E 1 10020 | 2 I 4 |
| | E 1 10040 | 2 I 6 |
| | E 1 12000 | 2 I 12 |
| 2520346 | D 1 20080 | 2 H 18 |
| | D 1 20100 | 2 H 22 |
| 2522107 | F 2 40000 | 2 L 6 |
| 2522744 | F 2 40000 | 2 L 6 |
| 2522745 | F 2 40000 | 2 L 6 |
| 2524589 | F 1 20050 | 2 K 14 |
| 2524789 | F 1 20050 | 2 K 14 |
| 2533051 | F 2 60050 | 3 A 14 |
| 2534214 | F 2 60050 | 3 A 14 |
| 2534215 | F 2 60050 | 3 A 14 |
| 2536249 | F 2 60050 | 3 A 14 |
| 2553205 | E 1 10020 | 2 I 4 |
| | E 1 10040 | 2 I 6 |
| | E 1 12000 | 2 I 12 |
| 2553209 | E 1 13000 | 2 I 14 |
| 2750296 | A 6 11010 | 1 K 2 |
| 3225728 | A 10 10030 | 2 D 22 |
| 3486395 | E 2 20000 | 2 I 22 |
| 3677384 | A 1 20150 | 1 B 24 |
| | A 1 25200 | 1 C 10 |
| 3678178 | J 1 10000 | 3 F 1 |
| 3678231 | J 1 10000 | 3 F 1 |
| 5291082 | E 2 40000 | 2 J 13 |
| 5291083 | E 2 40000 | 2 J 13 |
| 5291084 | E 2 40000 | 2 J 13 |
| 5291085 | E 2 40000 | 2 J 13 |
| 5291086 | E 2 40000 | 2 J 13 |
| 5291087 | E 2 40000 | 2 J 13 |
| 5299099 | A 5 40150 | 1 J 2 |
| | A 5 40500 | 1 J 12 |
| 5299100 | A 5 40150 | 1 J 2 |
| | A 5 40500 | 1 J 12 |
| 6002153 | A 9 14000 | 2 D 6 |
| 6190354 | E 2 50000 | 2 J 15 |
| 6191839 | A 8 10050 | 2 C 14 |
| | A 8 10110 | 2 C 18 |
| | A 8 10130 | 2 C 22 |
| 6191841 | A 8 10050 | 2 C 14 |
| | A 8 10110 | 2 C 18 |
| | A 8 10130 | 2 C 22 |
| 6515007 | A 1 25100 | 1 C 6 |
| | A 1 25200 | 1 C 10 |
| | B 4 10070 | 2 G 10 |