ITEM	QTY.	PART NO.	DESCRIPTION
CASE & FRAME GROUP			
(R9)(R8) 1	(R9) 1	160426	HOUSING - XMSN
2			
(R5) 3	1	145499	LATCH DWBR PIN
4	1	159	ROD END PIN
5	1	15223	COTTER PIN 1/8 x 1
CMNPTS FRAME GROUP			
17	1	92606	ROD - TIE
18	2	15272	COTTER 3/8 x 3
19	1	(R1) 15303	P FTG SWHD PLG 8
(R1) 20	1	35505	P FTG SWHD MAG PLG 12-14 NPT
21	1	(R1) 15304	P FTG - SQHD PLG 12
PTO GROUP			
26	1	139981	SHAFT - PTO
27	1	96020	GEAR - PTO BEVEL
28	1	12916	SNAP RING
CMNPTS PTO GROUP			
47	1	138861	CARRIER - BEARING
48	AR	134078	SHIM .005 REF. 134077
49	AR	134079	SHIM .007 REF. 134077
50	1	35573	SNAP RING
51	6	26379	CPSCR - SPL.
52	1	67355	LOCKWIRE
53	1	125399	BEARING - BALL
54	1	79389	OIL SEAL
55	1	90937	O RING ARP 568-260 HC E24
56	1	140373	SHIM .020
57	1	43211	BEARING - BALL
58	1	58924	SNAP RING
BRAKE SHAFT GRP & CMNPTS			
61	1	96414	GEAR - INTER PINION
62	1	96432	SHAFT - BRAKE
81	1	95969	GEAR - 2ND RED
82	2	12915	SNAP RING
83	1	230310	BRG - CONE
84	1	230311	BRG - CUP
84.1	1	87556	OIL SEAL
84.2	1	89727	RETAINER - OIL SEAL
84.3	1	92649	GASKET
(R13)(R7) 84.4	6	151788	CPSCR HT 1/2 UNF x 1-1/4 REF. 153079
84.5	6	15158	LOCKWASHER 1/2
84.6	[illegible]	12940	SNAP RING
84.7	1	92652	WHEEL - BRAKE
85	1	30080	BRG - CONE
86	1	30059	BRG - CUP
87	1	96433	RETAINER - BEARING
88	AR	134081	SHIM .005 REF. 134080
89	AR	134082	SHIM .007 REF. 134080
90	AR	134083	SHIM .020 REF. 134080
(R13)(R7) 91	6	151788	CPSCR - HT 1/2 UNF x 1-1/4 REF. 153079
92	6	15158	LOCKWASHER - 1/2
93	1	96423	PLATE - COVER
94	1	96424	GASKET
95	9	16820	CPSCR - HT 1/2 UNF x 1
96	9	15158	LOCKWASHER - 1/2
97	1	96425	PLATE - COVER
98	1	96426	GASKET - COVER
99	5	16820	CPSCR - HT 1/2 UNF x 1
100	5	15158	LOCKWASHER - 1/2
BEVEL GEAR SHAFT GROUP			
106	1	96021	GEAR - BEVEL
107	1	96495W	GEAR - REV. SPIDER
CMNPTS - BEVEL GEAR SHAFT			
121	1	95966	RETAINER - BRG.
122	AR	110934	SHIM .005
123	AR	110935	SHIM .007
124	AR	110936	SHIM .020
(R7) 125	6	151788	CPSCR - HT 1/2 UNF x 1-1/4 REF 153079
126	6	15158	LOCKWASHER - 1/2
127	2	95581	RING - SEAL
128	1	96458	SHAFT - CLUTCH
129	2	96783	SEAL
130	2	96784	SEAL
131	1	12916	SNAP RING
132	2	89773A	CLUTCH ASSY
133	1	96469W	GEAR-2ND RED SPIDER
134	1	21013	LOCKWASHER - BRG W-09
135	1	21014	LOCKNUT - BRG N-09
136	1	96472	RETAINER BRG.
137	1	15302	P FTG-SQHD PLG - 6
138	AR	134107	SHIM .005 REF 134106
139	AR	134108	SHIM .007 REF. 134106
140	AR	134109	SHIM .020 REF. 134106
(R7) 141	7	151788	CPSCR-HT 1/2 UNFx1-1/4
142	7	15158	LOCKWASHER - 1/2
143	2	230405	BRG - CONE
144	2	230351	BRG - CUP
145	2	95962	WASHER
146	1	95961	CARRIER BRG.
147	2	230407	BEARING ROLLER
148	2	58938	SNAP RING
149	1	95963	SPACER
150	1	95964	SPACER
152	1	96430	CARRIER - BRG
152	1	44316	BRG - BALL
153	1	96431	CARRIER-BRG
INTERM SHAFT GRP & CMNPTS			
161	1	96415	GEAR - INTERM.
170	2	30091	BRG - CUP
171	2	230309	BRG - CONE
172	1	92621	GEAR - DRUM PINION
173	1	92620	SHAFT - INTERM.
174	AR	134074	SHIM .005 REF. 134073
175	AR	134075	SHIM .007 REF. 134073
176	AR	134076	SHIM .020 REF. 134073
177	1	92623	COVER
(R13)(R7) 178	6	151788	CPSCR - HT 1/2 UNF x 1-1/4 REF 153079
179	6	15158	LOCKWASHER - 1/2

ITEM	QTY.	PART NO.	DESCRIPTION
DRUM SHAFT GRP & CMNPTS			
(R13) 180	1	141149	OIL SEAL
181	1	44484	OIL SEAL
182	1	9643[illegible]	SHAFT - DRUM
183	1	78022	BEARING ASSY
184	1	92608	SPACER
185	1	96436	GEAR - DRUM
186	1	96437A	BEARING ASSY
187	1	96438	PLATE - RETAINER
188	8	13863	PL BOLT - 5/8 UNF x 4
189	1	96439	RETAINER - BRG.
190	AR	134070	SHIM .005 REF, 134069
191	AR	134071	SHIM .007 REF. 134069
192	AR	134072	SHIM .020 REF. 134069
(R13)(R7) 193	8	151788	CPSCR - HT 1/2 UNF x 1-1/4 REF 153079
194	8	15158	LOCKWASHER - 1/2
(R7) 194.1	1	55468	O-RING ARP 568-236
195	2	6607	NUT - HEX
196	1	141357	DRUM - 12 IN.
197	1	92713	LOCK - OVERWIND FERRULE
200	1	92712	FILLER - CABLE GROOVE
201	1	15500	CPSCR - 5/8 UNF x 1-1/2 (R9)(R8)(R2)
202	1	15160	LOCKWASHER 5/8
205	1	141325	ADAPTER
(R2) 206	12	53559	DOWEL
207	12	141675	CPSCR 5/8 UNF SPL.
208	1	131982	SEAL RING
TOP COVER DIV. R.H. TOP COVER GRP.			
216	1	138905	COVER - R.H. SIDE FRAME
217	1	140371	GASKET
(R13)(R7) 218	10	151788	CPSCR - HT 1/2 UNF x 1-1/4 REF 153079
219	10	15158	LOCKWASHER - 1/2
220	1	15315	P FTG - SQHD PLG - 24
241	1	21420	PLUG - VENT
XMSN COVER GRP.			
(R12) 245	1	142763	XMSN COVER GRP.
ATTACHING PARTS			
246	2	140358	STUD - MTG.
247	2	134821	NUT - HT SLOTTED JAM 1-1/4 UNF
248	2	15240	COTTER - 5/32 x 2-1/2
(R2) 249	2	55454	"O" RING ARP 568-218
252	6	[illegible]369	STUD - MTG.
253	6	15168	LOCKWASHER
254	6	15018	NUT - HEX 1-1/4 UNF
255	1	138994	COUPLING
256	1	33786	PIN
257	1	9528	RING - LOCK
260	2	95709	ROD END - 3/8
261	2	142	PIN-ROD END 3/8
262	2	15212	COTTER 3/32 x 3/4
263	2	15027	NUT - JAM 5/16 UNF
264	[illegible]	16597	CPSCR HT 3/8 UNC 3/4
265	3	15156	LOCKWASHER 3/8
266	1	140512	CLAMP HOSE

ITEM	QTY.	PART NO.	DESCRIPTION
BRAKE GROUP			
304	1	128389	CRANK ASSY - BRAKE
305	1	140742	PIN
306	2	(R11) 14[illegible]441	SPRING
307	1	140742	PIN
308	1	95996W	SPACER
309	1	15317	P FTG SW SH PLG 16
310	1	92689	ROD END
311	1	15030	NUT - HEX JAM 5/8 UNF
312	1	159	PIN - ROD END
313	1	15223	COTTER 1/8 x 1
314	1	95628A	LINK ASSY - ADJ
315	1	96780A	LEVER ASSY - BRAKE
316	1	140741	PIN - BRAKE
317	1	128391	BAND ASSY - BRAKE
318	1	96725	PIN
319	1	15226	COTTER 1/8 x 1-3/4
HYDRAULIC GROUP			
330	2	95491	CABLE - PUSH PULL
333	1	15367	P FTG LG NIP 1/2 x 6
334	1	153766	VALVE ASSY
335	1	61142	O RING
336	1	15455	P FTG TEE 8
337	1	95727	TUBE ASSY
338	1	15334	P FTG CL NIP 1/2
339	1	17302	T FTG M CONN 37 8-8
340	2	18789	CPSCR HS 3/8 UNC x 5
341	1	18889	CPSCR HS 3/8 UNC x 3-1/2
(R5) 342	3	177947	LOCKWASHER H.C. 3/8
343	1	96521	T FTG - M.EL.STHD
344	1	132005	HOSE - HYD.
345	1	17309	T FTG M ELL 8-6
346	1	97978A	CYLINDER - BRAKE
347	1	140741	PIN - BRAKE
348	1	14500	T FTG M ELL 37-4-2
349	1	96477	HOSE - HYD.
350	2	16559	T FTG M ELL STR THD 8
351	1	88297	HOSE - HYD
352	1	17344	T FTG 45° M ELL 37 8-6
353	1	96479	TUBE ASSY
354	1	132002	FTG-SPL
355	1	96624	BLOCK
356	2	18588	CPSCR HT 1/2 UNC x 1-1/2
357	2	15158	LOCKWASHER 1/2
358	2	128002	BALL CHECK CON 4-2
359	1	16186	P FTG ST TEE 2
360	1	61056	O RING
361	1	15036	NUT JAM 1-14 NF
362	1	15935	LOCKWASHER SP 1 IN.
363	1	17309	T FTG M ELL 37 8-6
364	1	96480	HOSE - HYD.
365	2	17315	T FTG M CONN 37 8-6
370	1	19535	P FTG ST TEE 6
371	1	15314	P FTG H S. PLUG 6
372	2	15025	NUT JAM 5/16 UNF
373	1	95737	GROMMET
374	2	18853	STSCR HS CP 5/16 UNC x 1-1/4
375	2	15001	NUT HEX JAM 5/16 UNC
376.0	1	96491	COVER
376.1	1	96492	GASKET
376.2	6	16829	CPSCR HT 1/2 UNC x 1
376.3	6	15158	LOCKWASHER 1/2
377.0	1	132020	GASKET
377.1	1	132021	COVER
377.2	6	16805	CPSCR HT 3/8 x 1
377.3	6	15156	LOCKWASHER 3/8
378.0	1	133893	HOUSING - VALVE
378.1	1	96487	GASKET - VALVE COVER
378.2	1	96488W	COVER
378.3	1	96490	GASKET
378.4	5	16807	CPSCR HT 1/2 UNF x 1-1/2
378.5	5	15158	LOCKWASHER 1/2

ITEM	QTY.	PART NO.	DESCRIPTION
PUMP GROUP			
380	1	79688	BRKT - PUMP
381	1	95486	GASKET
382	1	128550	PUMP - HYDRAULIC
383	1	95710	GASKET
384	2	18549	CPSCR HT 3/8 UNC x 5
385	2	15156	LOCKWASHER 3/8
386	1	128548	COUPLING - PUMP
387	2	136391	STSCR SH 3/8 UNC x 1/4
388	1	54112	SNAP RING
389	1	16543	T FTG M CONN STHD 37° 12-12
390	1	95578	HOSE - HYD.
391	1	140372	HOSE HYD. REF. B138396
392	1	128547	HOSE FTG M CON STHD 20 x 21
(R4) 393	2	119236	CLAMP - HOSE
394	1	14683	T FTG M CON 37° 12-8
395	1	19512	P FTG 45° ELL 8
396	1	17247	H FTG ST. NIP 1-1/4 x 1 NPT
TRACTOR MOUNTED - HANDLING GEAR			
(R6) 400	1	147776	HANDLEVER - BRKT. ASSY.
MISCELLANEOUS			
410	1	41616	NAME PLATE
411	4	16600	DRIVE SCR 6 x 3/8
415	1	140386	LUB. INSTRUCTION PLATE
416	4	16602	DRIVE SCR 6 x 1/4

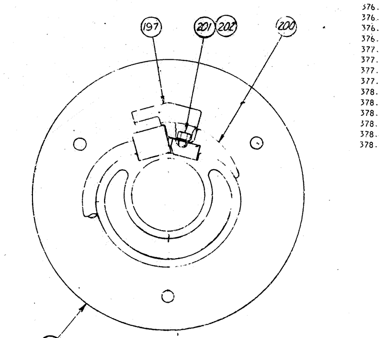

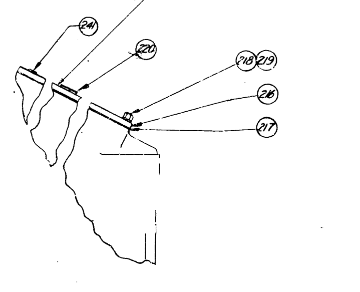

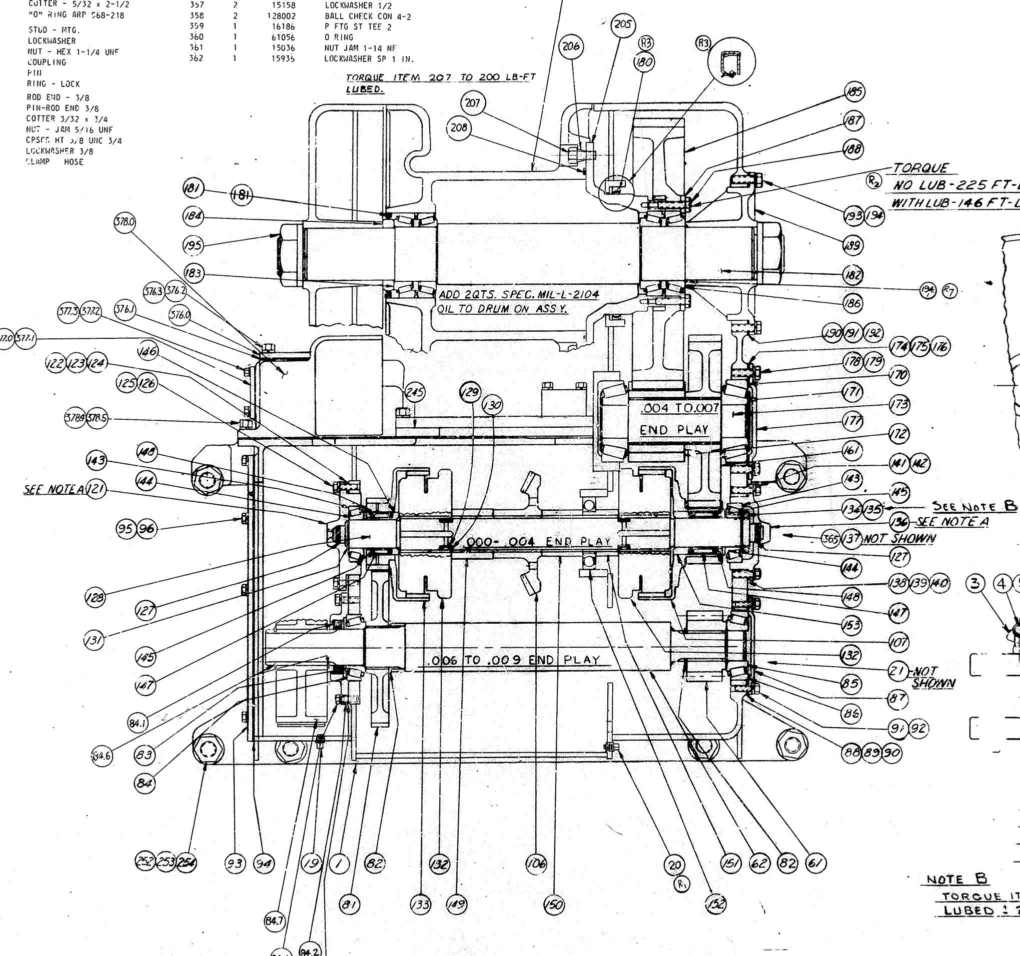

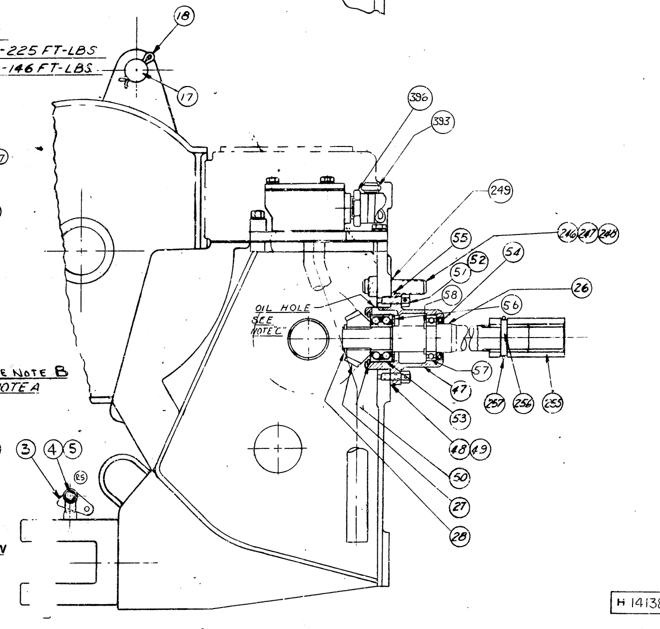

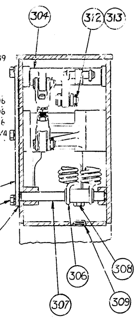

VIEW B-B
(FROM SHEET 2)

NOTE A - INSTALL SHAFT (128) WITHOUT SEAL RINGS (127) AND SET END PLAY. REMOVE RETAINERS (121) & (136) AND INSTALL SEAL RINGS, THEN REINSTALL RETAINERS.

APPLY "LUBRIPLATE" TO TOP AND SIDES OF ITEMS 129 & 130 BEFORE INSERTING IN SHAFT

ADJUST BEVEL GEARS WITH SHIMS (ITEMS 48, 49, 122, 123, 124, 138 139 & 140) TO PRODUCE .006 TO .014 BACKLASH.

NOTE B
TORQUE ITEM (135) TO 200 FT LBS LUBED ± 25 LBS

NOTE C:
ITEM (47) MUST BE MOUNTED WITH OIL HOLE AT TOP AS SHOWN.

H 141385

R-	CHANGE	ECN
9	ITEM (1) WAS 160426	12952
9	ITEM (334) WAS 160598	12952
8	ITEM (1) WAS 141433	12952
8	ITEM (334) WAS 89784	12952
7	ITEMS 84.4	10460 #30
7	91, 125, 141	10460 #30
7	178, 193, 218 WAS P/N 37562	10460 #30
7	ADDED ITEM 194.1	10460 #30
6	ITEM 400 WAS 123279	11392
5	DEADBOLT PIN LOCK & PARTS ADDED	10460 #27
4	ITEM 393 WAS 39761	10460 #18
3	ADDED DWG OF OIL SEAL	10460 #12
3	CORRECTED DWG OF OIL SEAL	"
2	TORQUE NOTE WAS ON ITEM 193	10460 #9
2	ITEMS 206 & 207 WERE QTY 10	10460 #9
2	ADDED ITEM 249 ITEM 334 WAS 87064	10460 #9
1	ITEM 21 WAS QTY 2	10460 #6
1	ADDED ITEM 20, ITEM 19 WAS 15315-505H	10460 #6

R-16

R-	CHANGE	ECN
16	CANCELLED	10462
15	IT WAS 127942 ITEM WAS 15156B	18135
14	SEE ECN	14631
13	ADDED REF. DIS3079 TO ITEMS 84.4, 91, 178, 193, 218	13551
12	ITEM 245 WAS 132007	13573
11	ITEM 306 WAS 96001	12921
10	RZM. ITEM 2	12921
10	ITEM (1) WAS 153761	12921

CANCELLED

MATERIAL	LISTED
SCALE	NONE
DATE	11-30-64
DR.	S.M.H
MODEL	D7H MIL
LIST FIRST USED	141382
	H133901
RELEASED ON ECN	10460-5
DWG. NO.	T-
PART NO.	H141385
NAME	ARR. D7H MIL T.W.
	SHEET 1 OF 2

REMOVE BURRS

DO NOT SCALE DRAWING - WORK TO DIMENSIONS

HYSTER COMPANY
PORTLAND, OREGON

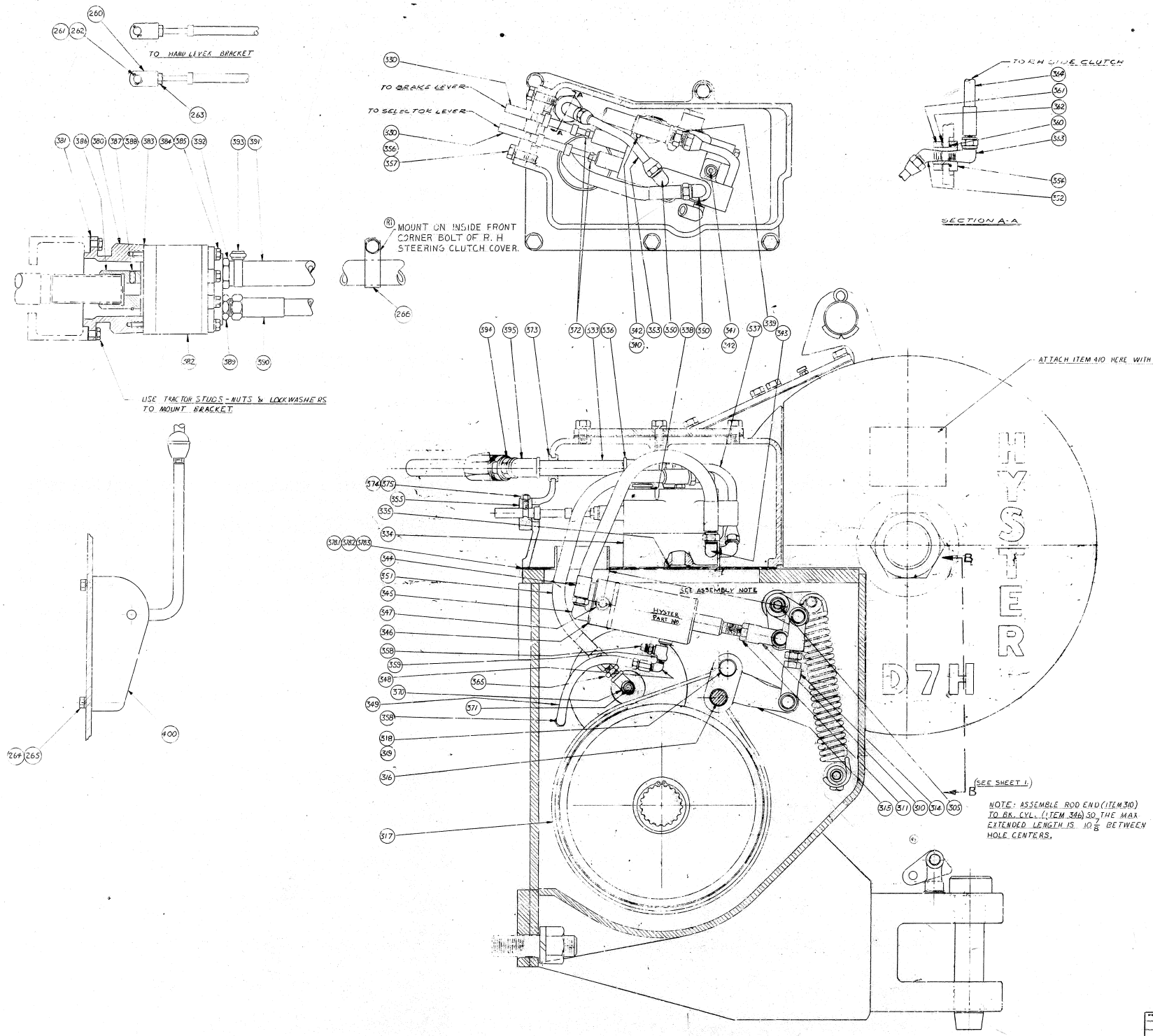

H 141385

R-3

CANCELLED

MATERIAL LISTED	SCALE NONE	DES. OF T-	PART NO. H 141385
	DATE 1-20-65		
	DR. G.M.H. / CHECK D7H MIL		
NEXT TREATMENT	MODEL 141384	NAME ARR. D7H MIL. T.W.	
	7/8/33	SHEET 2 OF 2	
REMOVE BURRS	SYMBOLS ▽ REFER TO AVERAGE ROUGHNESS IN MICROINCHES	DO NOT SCALE DRAWING WORK TO DIMENSIONS	HYSTER COMPANY PORTLAND, OREGON
TOLERANCES OF MACHINED FRACTIONAL DIMENSIONS UNLESS OTHERWISE SPECIFIED. CLEARANCE HOLE DIA. 5 DIA. - .005 OTHER DIA. - .010		RELEASED ON ECN 10460 S.	

REV.	CHANGE	ECN
3	CANCELLED	10460
2	TRANSFER TO ARR. D7H MIL.	10460
1	ADDED NOTE	