Vane Motor

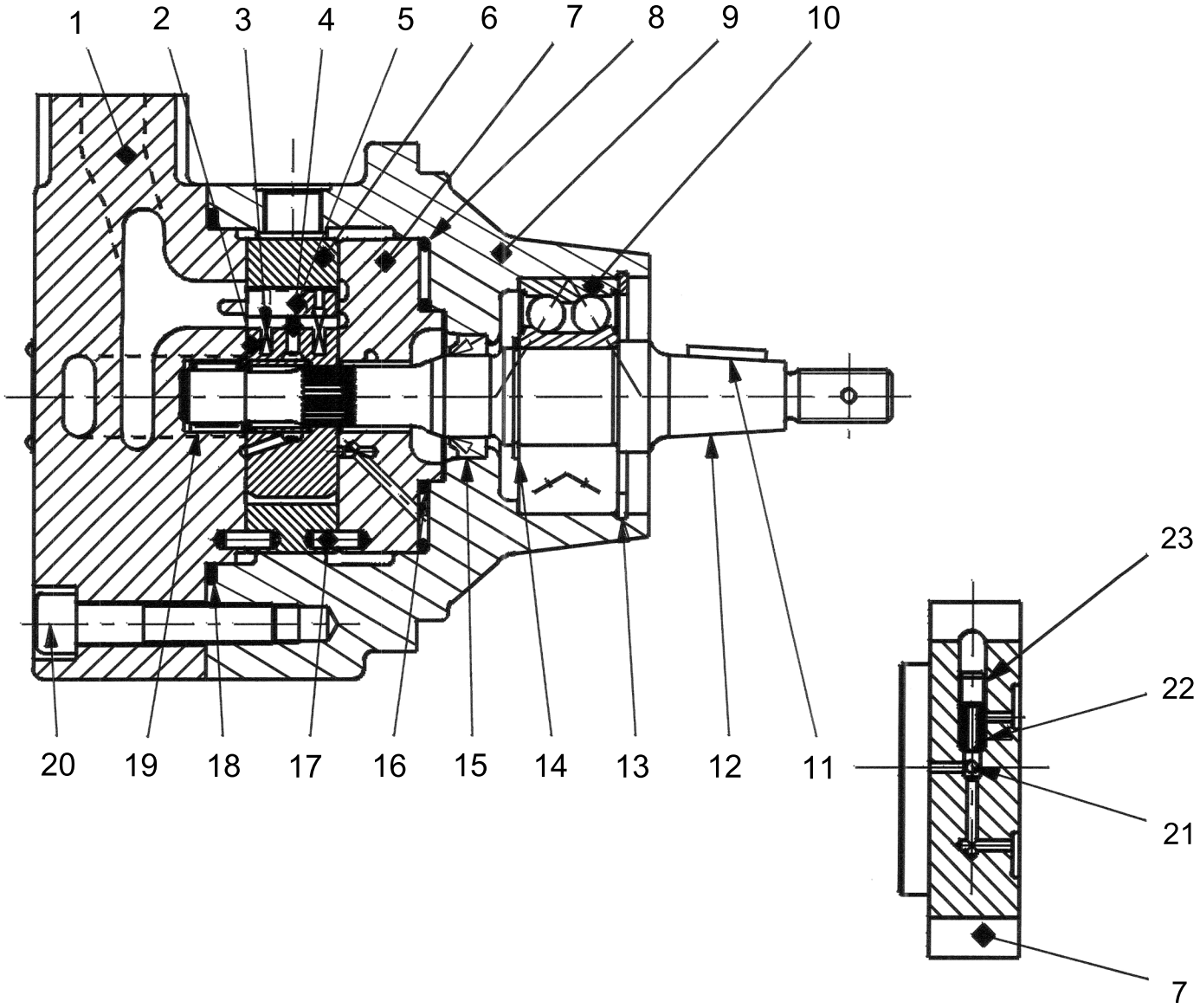

Item		Part No.	Qty	Description	Item		Part No.	Qty	Description
		593657		**Vane Motor**					
1	*e	- - - - - -	1	. End Cap	16	*c	- - - - - -	1	. Section Seal
2	*a	- - - - - -	1	. Rotor Insert Assy	17		NSS	2	. Dowel Pin
3	*a	- - - - - -	24	. Spring Vane	18	*c	- - - - - -	1	. Section Seal
4	*a	- - - - - -	12	. Vane Holdout Pin	19	*e	- - - - - -	1	. Needle Bearing
5	*a	- - - - - -	12	. Vane	20		NSS	4	. Screw
6	*a	- - - - - -	1	. Cam Ring	21	*d	- - - - - -	1	. Ball
7	*d	- - - - - -	1	. Port-Pressure Assy	22	*d	- - - - - -	1	. Adapter Valve
8	*c	- - - - - -	1	. O-Ring	23	*d	- - - - - -	1	. Screw
9		NSS	1	. Housing					
10	*b	- - - - - -	1	. Ball Bearing		*a	Available in Cartridge Kit 254728		
11	*b	- - - - - -	1	. Key		*b	Available in Shaft & Bearing Kit 252168		
12	*d	- - - - - -	1	. Shaft		*c	Available in Seal Kit 252165		
13		254727	1	. Retaining Ring		*d	Available in Port Plate-Pressure Assy 252167		
14	*b	- - - - - -	1	. Retaining Ring		*e	Available in End Cap Assy Kit 252169		
15	*c	- - - - - -	1	. Shaft Seal		NSS	Not Sold Separately		