Auto Lube System - Lincoln

CONTACT YOUR LOCAL DEALER FOR PARTS INFORMATION

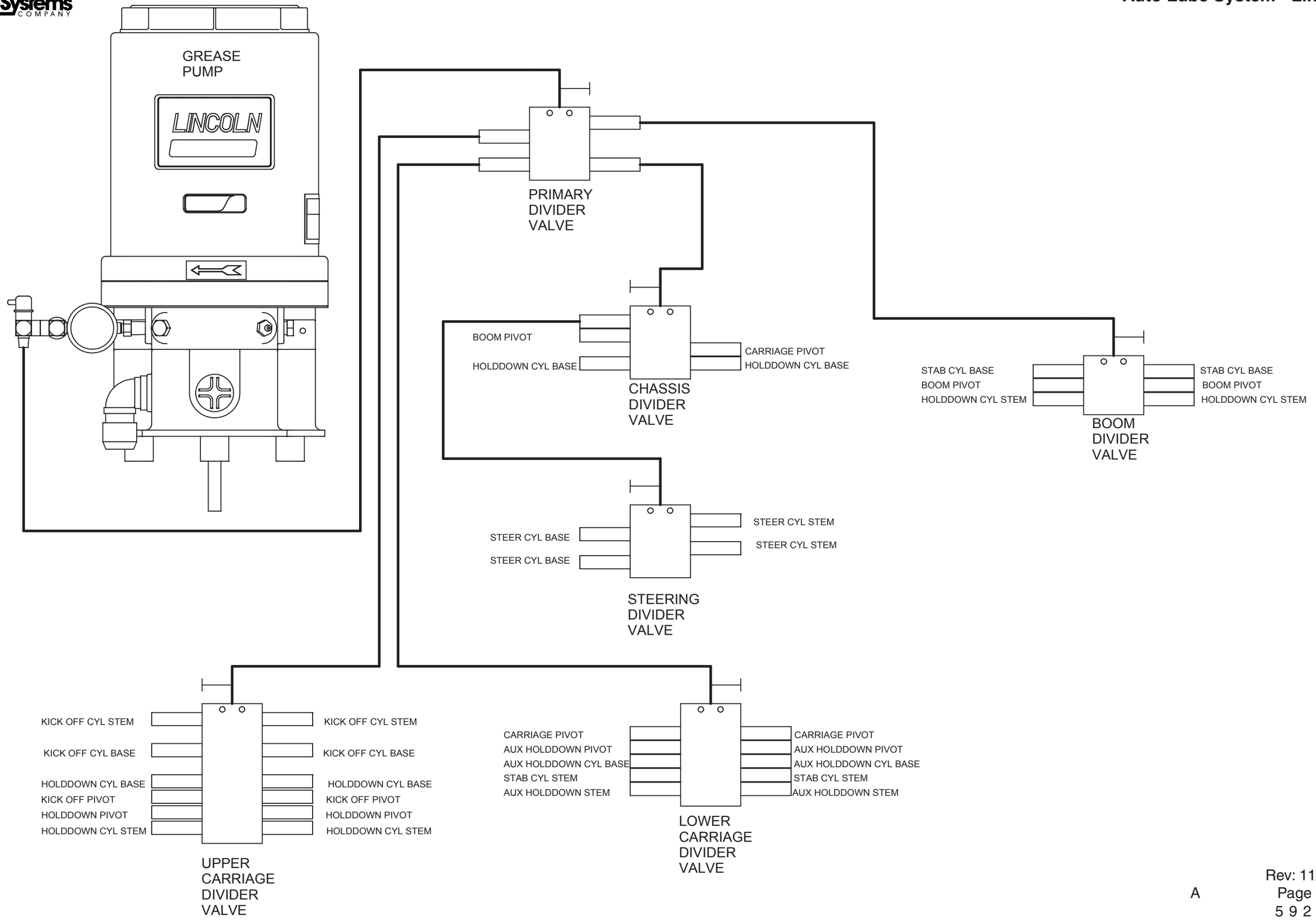
GREASE PUMP
LINCOLN
PRIMARY DIVIDER VALVE
BOOM PIVOT
HOLDDOWN CYL BASE
CARRIAGE PIVOT
HOLDDOWN CYL BASE
CHASSIS DIVIDER VALVE
STAB CYL BASE
BOOM PIVOT
HOLDDOWN CYL STEM
STAB CYL BASE
BOOM PIVOT
HOLDDOWN CYL STEM
BOOM DIVIDER VALVE
STEER CYL BASE
STEER CYL BASE
STEER CYL STEM
STEER CYL STEM
STEERING DIVIDER VALVE
KICK OFF CYL STEM
KICK OFF CYL BASE
HOLDDOWN CYL BASE
KICK OFF PIVOT
HOLDDOWN PIVOT
HOLDDOWN CYL STEM
KICK OFF CYL STEM
KICK OFF CYL BASE
HOLDDOWN CYL BASE
KICK OFF PIVOT
HOLDDOWN PIVOT
HOLDDOWN CYL STEM
UPPER CARRIAGE DIVIDER VALVE
CARRIAGE PIVOT
AUX HOLDDOWN PIVOT
AUX HOLDDOWN CYL BASE
STAB CYL STEM
AUX HOLDDOWN STEM
CARRIAGE PIVOT
AUX HOLDDOWN PIVOT
AUX HOLDDOWN CYL BASE
STAB CYL STEM
AUX HOLDDOWN STEM
LOWER CARRIAGE DIVIDER VALVE

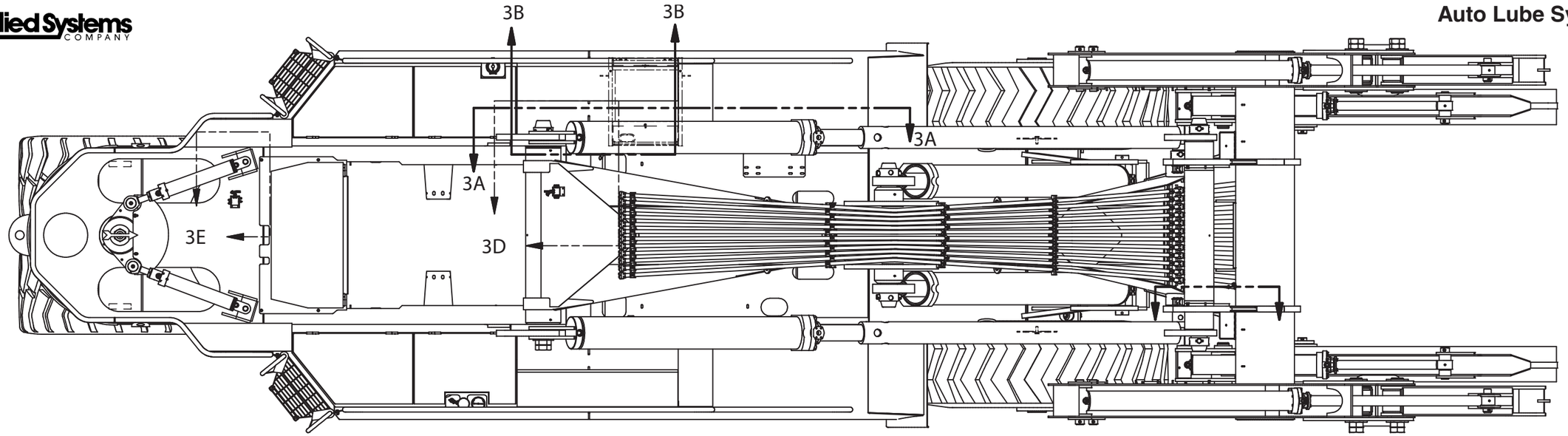
3B
3B
3A
3A
3E
3D

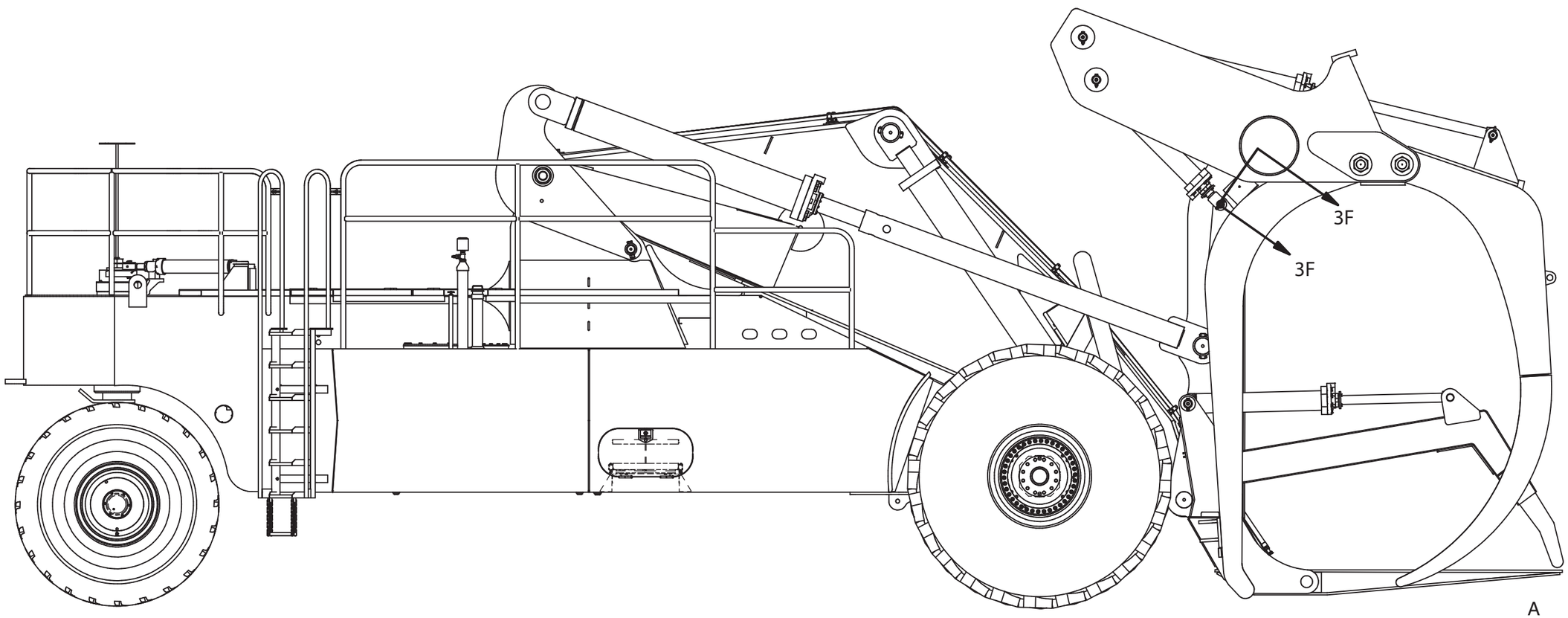
3F
3F
A

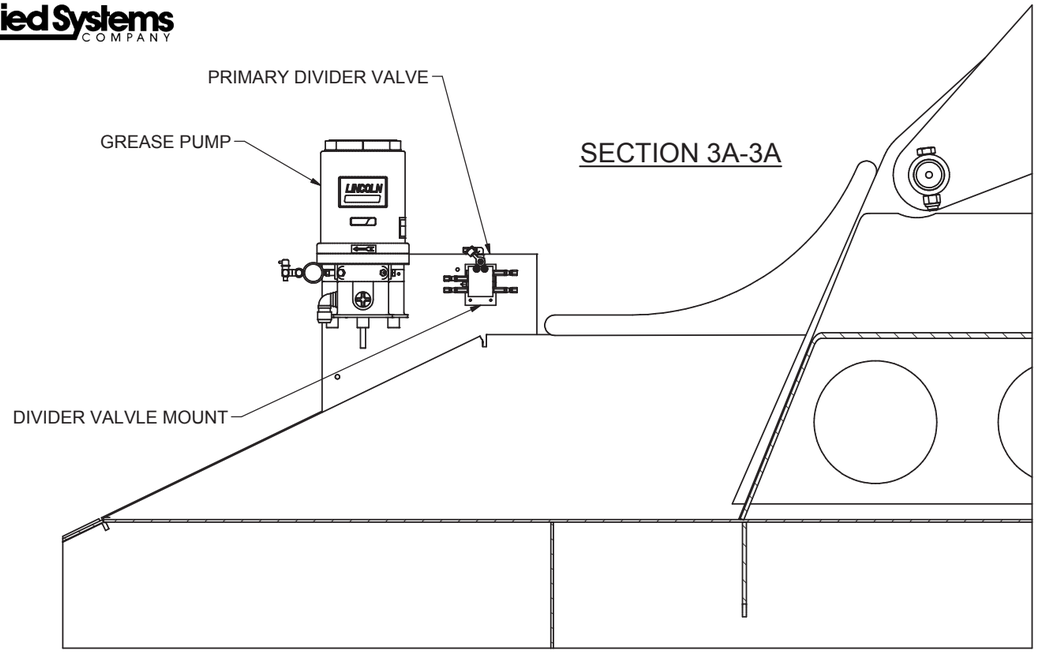

SECTION 3A-3A

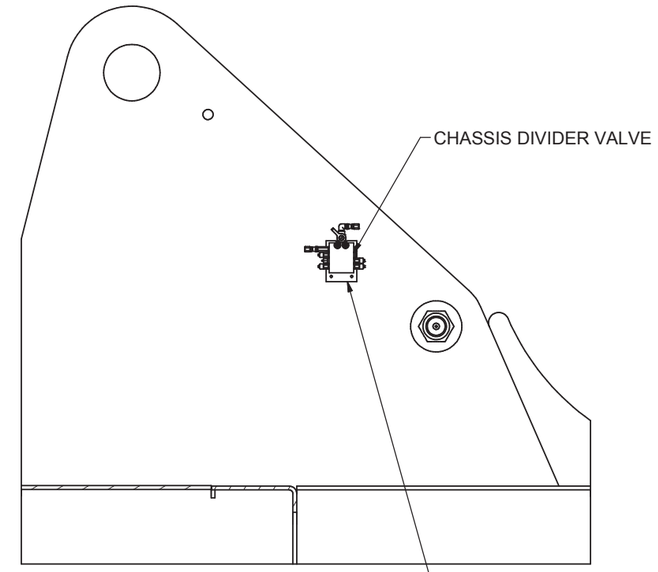

SECTION 3B-3B

VALVE LOCATIONS ARE APPROXIMATE

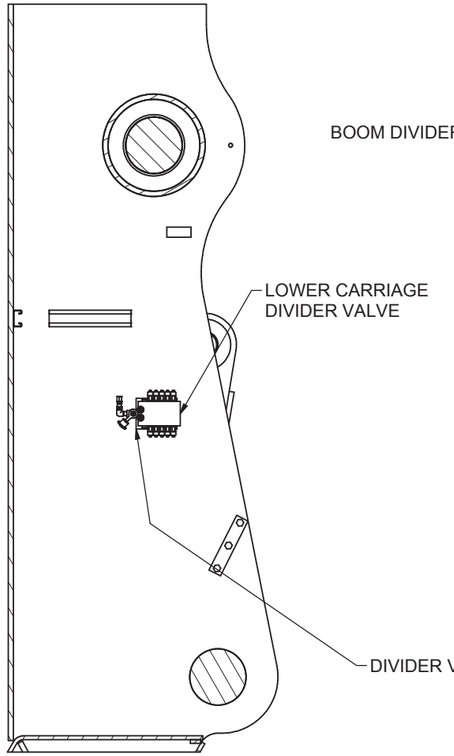

SECTION 3C-3C

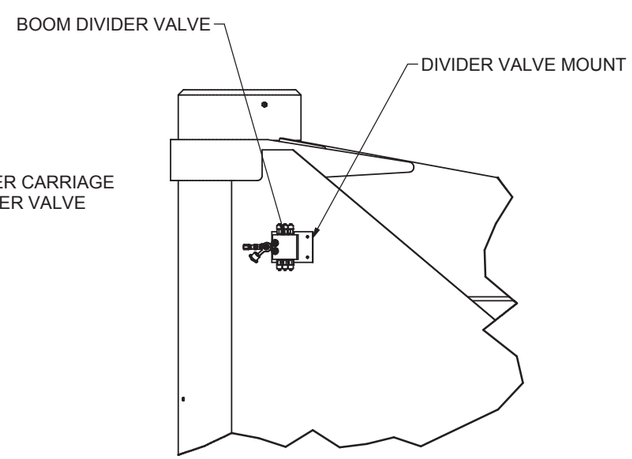

DETAIL 3D

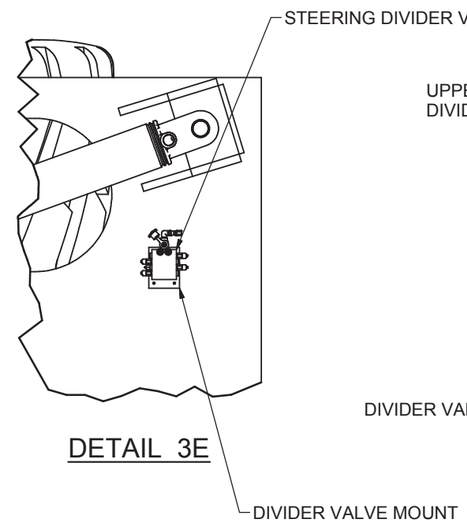

DETAIL 3E

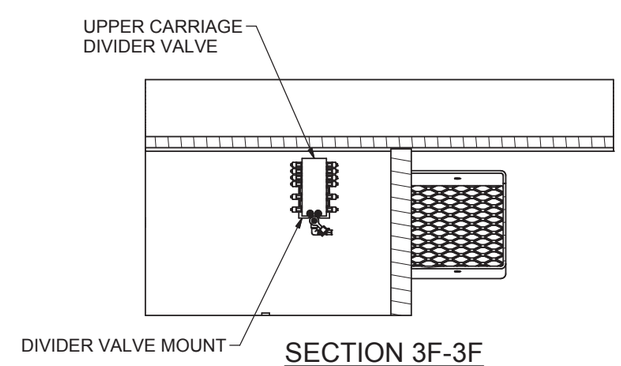

SECTION 3F-3F