Steering Column, Front

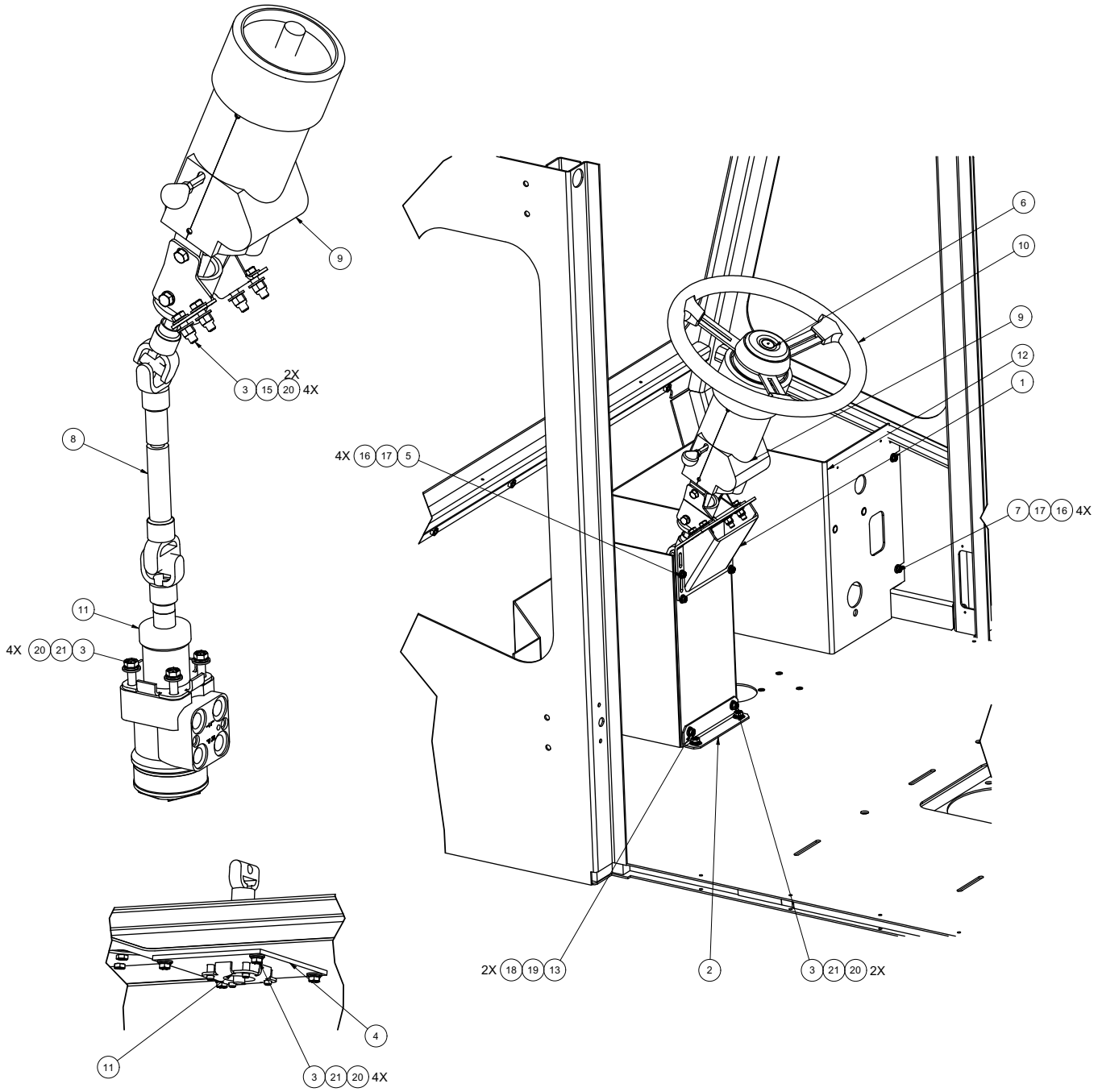

Item	Part No.	Qty	Description	Item	Part No.	Qty	Description
	587757		**Steering Column, Front**	11	195-0142	1	. Column, Steering
1	004-1659	1	. Bracket	12	236-0227	1	. Bulkhead
2	004-1787	1	. Bracket	13	R13811015	2	. Capscrew
3	221499W	14	. Capscrew	15	237567	4	. Locknut
4	026-6973	1	. Plate, Adapter	16	221763W	8	. Washer
5	R13810993	4	. Capscrew	17	R13812512	8	. Lockwasher
6	234651	1	. Button, Horn	18	R13802914	2	. Washer
7	224120W	4	. Capscrew	19	201566	2	. Lockwasher
8	182-0247	1	. Driveline Assembly, Steering	20	221767W	18	. Washer
9 *	258809	1	. Steering Column	21	201567	10	. Lockwasher
10	244506	1	. Steering Wheel				

* See Separate Coverage