Dump Cylinder

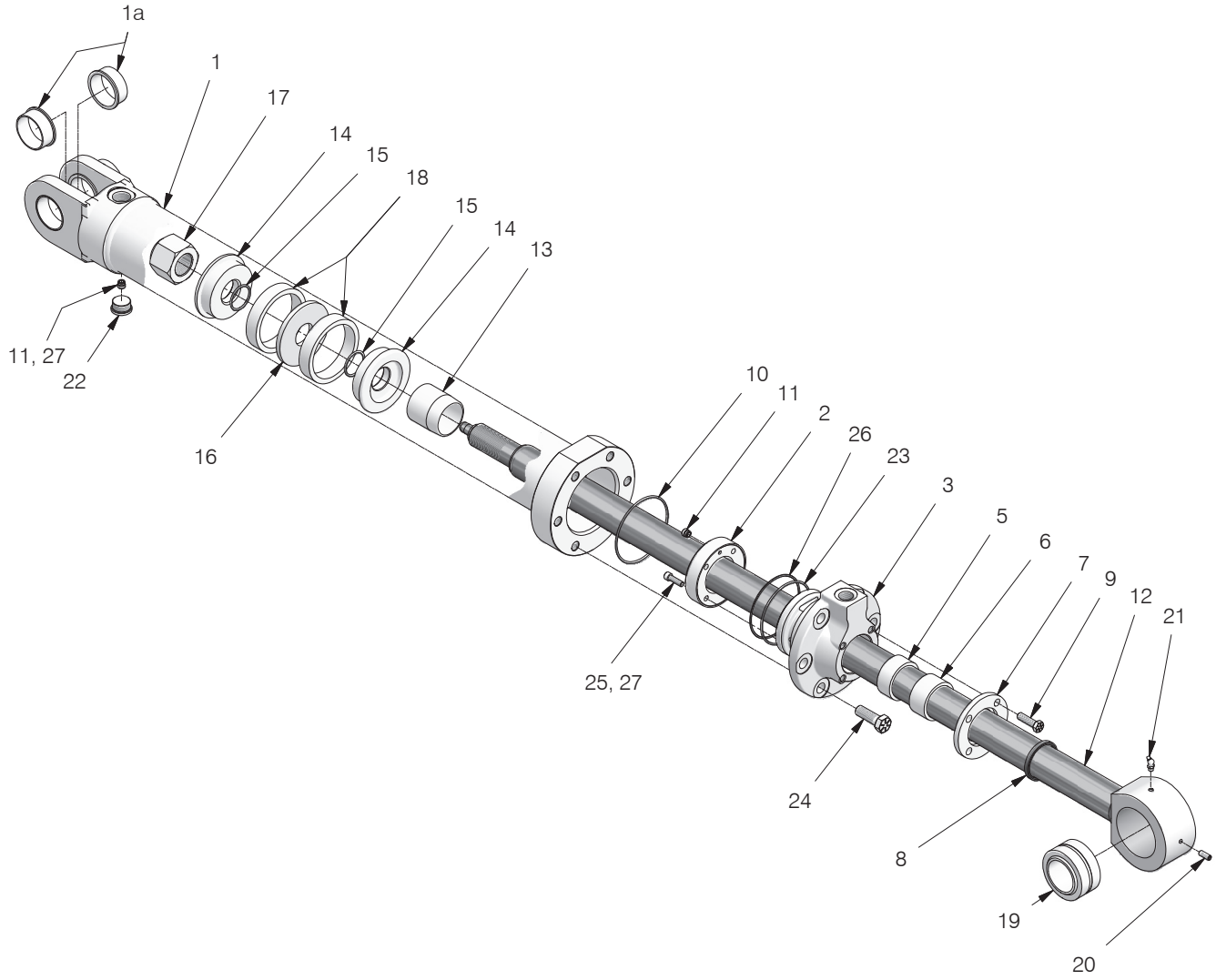

Item		Part No.	Qty	Description
		586035		**Cylinder Assembly, Dump**
1		586036	1	. Barrel
1a		524392	2	. . Bushing
2	*f	586041	1	. Plate, Metering
3		586040	1	. Packing Gland
5	*g	566435	1	. Packing, Stem
6		505594	1	. Bushing
7		505593	1	. Retainer
8	*g	218125	1	. Wiper Ring
9	*a	220875	4	. Capscrew
10	*g	57597W	1	. O-Ring
11	*c	257705	2	. Check Valve
12		586042	1	. Stem & Eye
13		586044	1	. Bushing
14		505597	2	. Piston
15	*g	203515	2	. O-Ring
16		505598	1	. Spacer, Piston
17	*d	219929	1	. Nut, Esna
18	*g	566428	2	. Packing
19		204503	1	. Bearing, Spherical
20		00102403	1	. Set Screw
21		16001W	1	. Fitting, Lube
22		227949	1	. Fitting
23	*g	Y098629-248	1	. O-Ring
24	*b	221656W	6	. Capscrew
25	*e	Y73G-0620	4	. Capscrew
26		Y076800-248	1	. Backup Ring
27		245231	1	. Loctite

*a Adjust packing to stop leaking; do not overtighten.
*b Torque to 250 ft-lbs.
*c Apply one drop of item 27 to threads and Torque to 1-2 ft-lbs. Use 257709 Installation Tool.
*d Torque to 2000 ft-lbs.
*e Apply threadlock item 27 to female threads 4X and torque to 35 ft-lbs (cross tighten).
*f Item 2 is a locational interference fit.
*g Included in 586048 Service Kit.