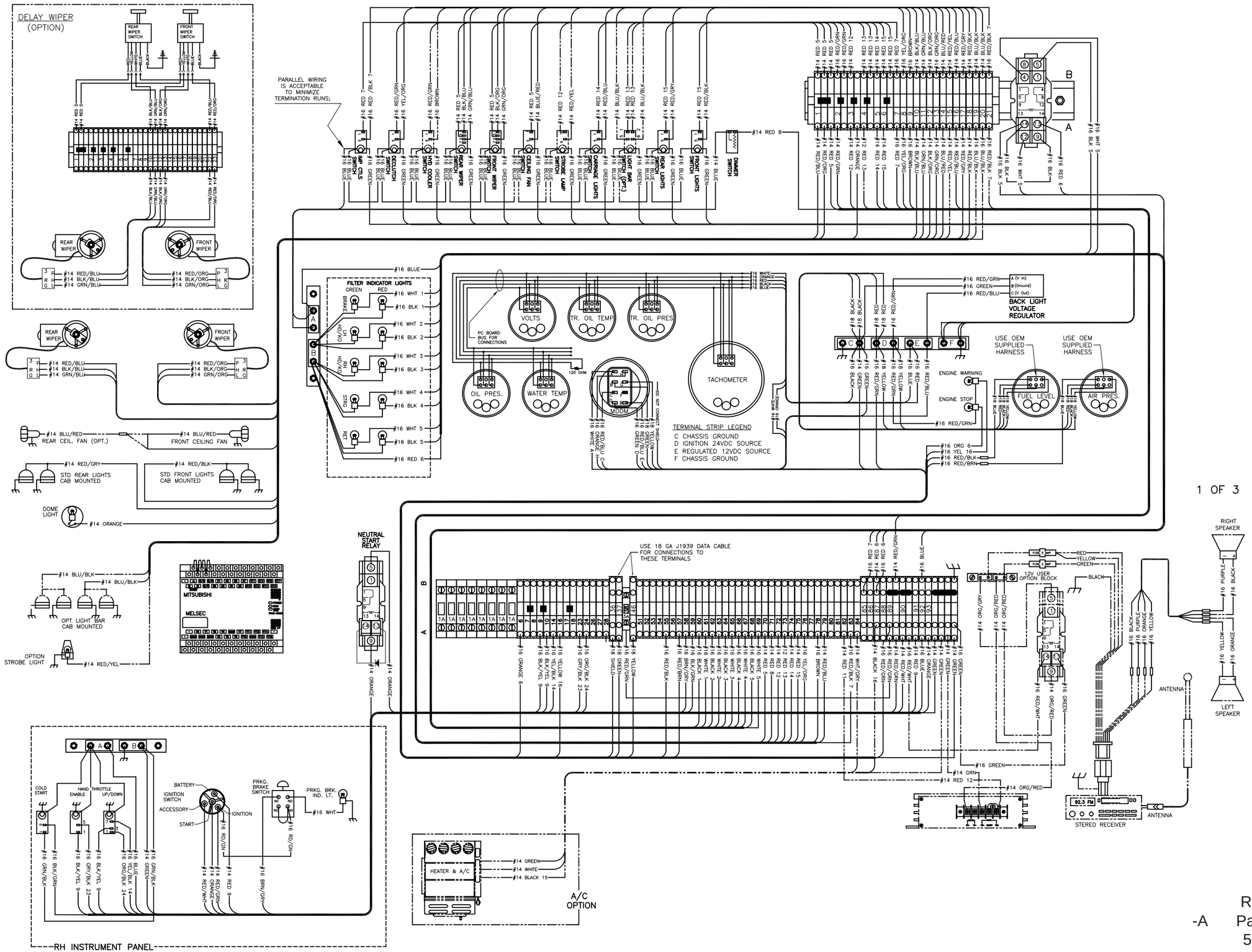
DELAY WIPER (OPTION)
REAR WIPER SWITCH
FRONT WIPER SWITCH
REAR WIPER
FRONT WIPER
PARALLEL WIRING IS ACCEPTABLE TO MINIMIZE TERMINATION RUNS;
IMP CTLS SWITCH
DECLUTCH SWITCH
HYD COOLER SWITCH
REAR WIPER SWITCH
FRONT WIPER SWITCH
CEILING FAN
STROBE LAMP
CARRIAGE LIGHTS SWITCH
LIGHT BAR SWITCH (OPT.)
REAR LIGHTS SWITCH
FRONT LIGHTS SWITCH
DIMMER SWITCH
FILTER INDICATOR LIGHTS
GREEN
RED
BRAKE
LH HYD/ORG
RH HYD/YEL
STRG
RET
PC BOARD BUS FOR CONNECTIONS
VOLTS
TR. OIL TEMP
TR. OIL PRES.
OIL PRES.
WATER TEMP
MODM
120 OHM
TACHOMETER
TERMINAL STRIP LEGEND
C CHASSIS GROUND
D IGNITION 24VDC SOURCE
E REGULATED 12VDC SOURCE
F CHASSIS GROUND
BACK LIGHT VOLTAGE REGULATOR
A (V In)
B (Ground)
C (V Out)
USE OEM SUPPLIED HARNESS
ENGINE WARNING
ENGINE STOP
FUEL LEVEL
AIR PRES.
REAR CEIL. FAN (OPT.)
FRONT CEILING FAN
STD REAR LIGHTS CAB MOUNTED
STD FRONT LIGHTS CAB MOUNTED
DOME LIGHT
OPT LIGHT BAR CAB MOUNTED
OPTION STROBE LIGHT
MITSUBISHI
MELSEC
NEUTRAL START RELAY
USE 18 GA J1939 DATA CABLE FOR CONNECTIONS TO THESE TERMINALS
12V USER OPTION BLOCK
RIGHT SPEAKER
LEFT SPEAKER
ANTENNA
STEREO RECEIVER
COLD START
HAND ENABLE
THROTTLE UP/DOWN
BATTERY
IGNITION SWITCH
ACCESSORY
START
IGNITION
PRKG. BRAKE SWITCH
PRKG. BRK. IND. LT.
RH INSTRUMENT PANEL
HEATER & A/C
A/C OPTION

1 OF 3

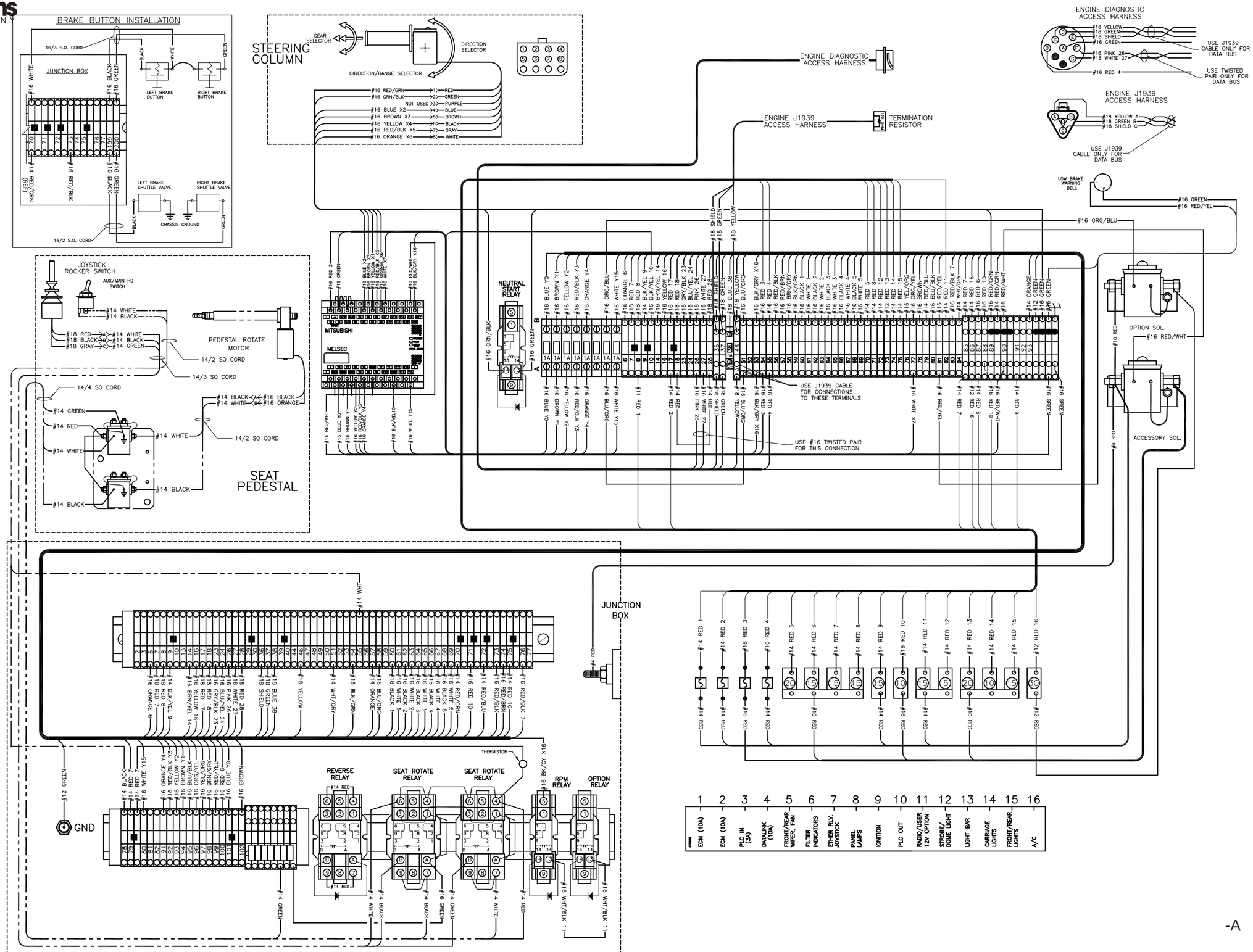
BRAKE BUTTON INSTALLATION
JUNCTION BOX
LEFT BRAKE BUTTON
RIGHT BRAKE BUTTON
LEFT BRAKE SHUTTLE VALVE
RIGHT BRAKE SHUTTLE VALVE
CHASSIS GROUND
STEERING COLUMN
GEAR SELECTOR
DIRECTION SELECTOR
DIRECTION/RANGE SELECTOR
ENGINE DIAGNOSTIC ACCESS HARNESS
ENGINE J1939 ACCESS HARNESS
TERMINATION RESISTOR
USE J1939 CABLE ONLY FOR DATA BUS
USE TWISTED PAIR ONLY FOR DATA BUS
LOW BRAKE WARNING BELL
JOYSTICK ROCKER SWITCH
AUX/MAIN HD SWITCH
PEDESTAL ROTATE MOTOR
SEAT PEDESTAL
MITSUBISHI
MELSEC
NEUTRAL START RELAY
OPTION SOL.
ACCESSORY SOL.
USE J1939 CABLE FOR CONNECTIONS TO THESE TERMINALS
USE #16 TWISTED PAIR FOR THIS CONNECTION
JUNCTION BOX
GND
REVERSE RELAY
SEAT ROTATE RELAY
SEAT ROTATE RELAY
RPM RELAY
OPTION RELAY
THERMISTOR
1 ECM (10A)
2 ECM (10A)
3 PLC IN (3A)
4 DATALINK (10A)
5 FRONT/REAR WIPER, FAN
6 FILTER INDICATORS
7 ETHER RLY. JOYSTICK
8 PANEL LAMPS
9 IGNITION
10 PLC OUT
11 RADIO/USER 12V OPTION
12 STROBE/ DOME LIGHT
13 LIGHT BAR
14 CARRIAGE LIGHTS
15 FRONT/REAR LIGHTS
16 A/C

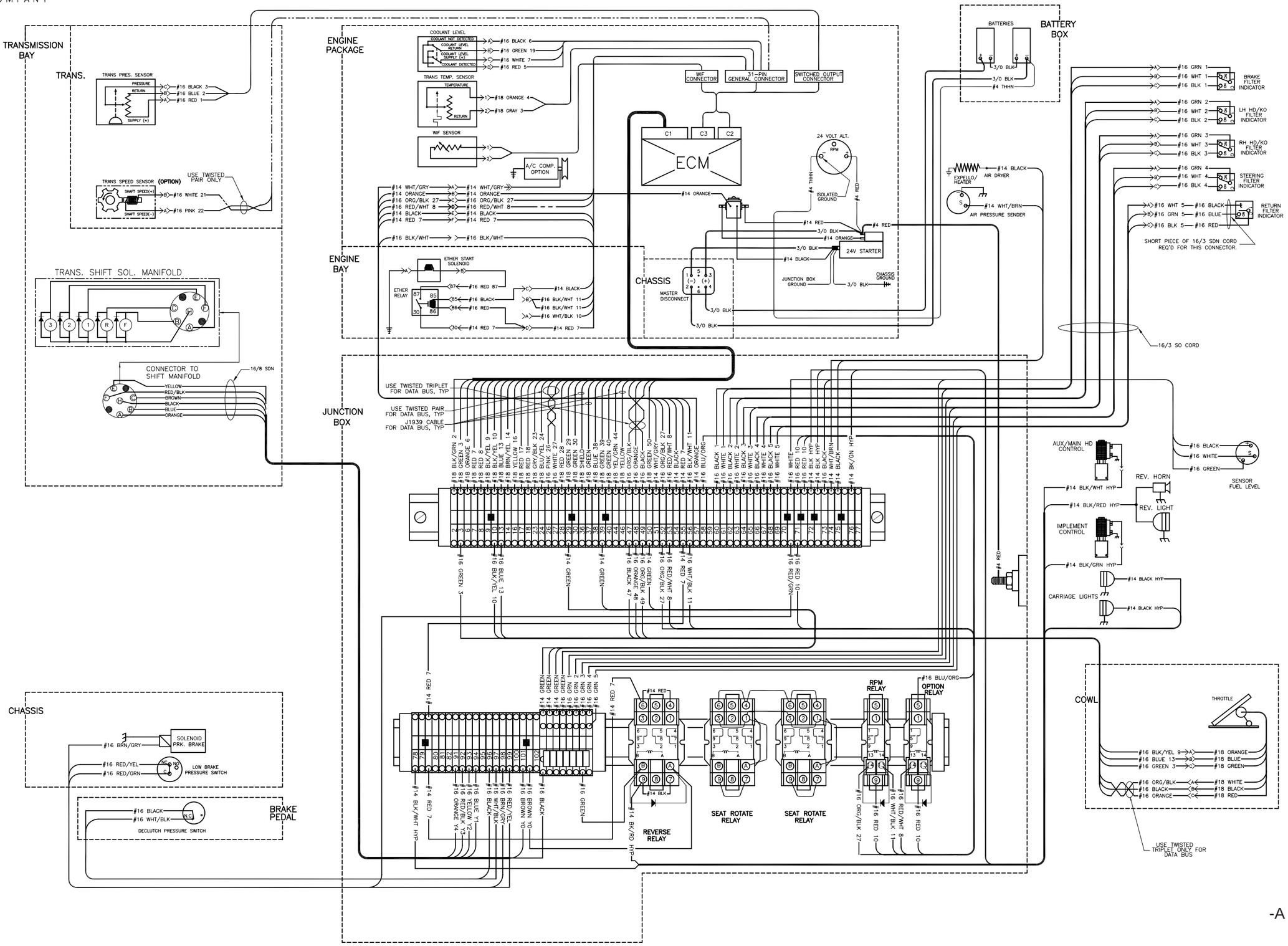

Rev: 05/04

-A Page 3 of 3

580819