Hydraulic System - Carriage

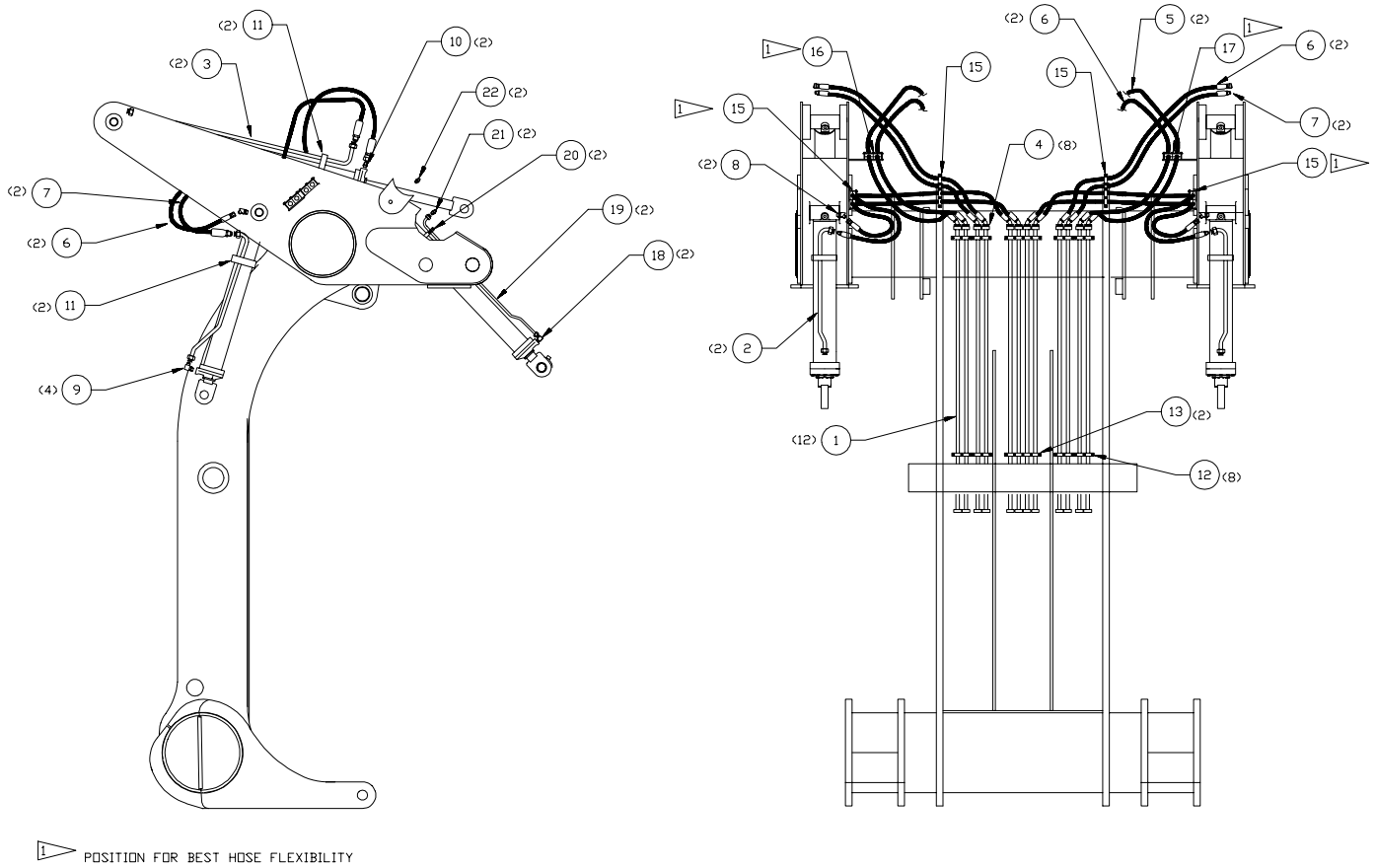

Item	Part No.	Qty	Description	Item	Part No.	Qty	Description
	577416		**Hydraulic System - Carriage**				
1	561243	12	. Tube Assembly	10	209323	2	. Fitting
2	561246	2	. Tube Assembly	11	562456	4	. Clamp
3	561247	2	. Tube Assembly	12	225310	8	. Clamp
4	11759	8	. Kit, Split Flange	13	225216	2	. Clamp
	203443	1	. . O-Ring	15	228532	6	. Clamp
	209535	2	. . Clamp Half	16	572896	1	. Clamp
	202201	4	. . Capscrew	17	572898	1	. Clamp
	201567	4	. . Lockwasher	18	209715	2	. Fitting
5	244682	2	. Hose Assembly	19	558941	2	. Tube Assembly
6	240243	6	. Hose Assembly	20	562456	2	. Clamp
7	240244	4	. Hose Assembly	21	209442	2	. Fitting
8	209147	2	. Fitting	22	209323	2	. Fitting
9	209715	2	. Fitting				