Wet Disc Brakes

Maintenance Manual For Wet Disk Brake Assemblys:

584897 & 237463

Service Notes

This Field Maintenance Manual describes the recommended safety, service and repair procedures for Wet Disc Brakes.

The information in this manual was current at the time of printing. The information is subject to change without notice or liability.

You must follow your company safety procedures when you service or repair brakes. Be sure you understand all the procedures and instructions before you begin work.

Allied uses the following types of notes to give warning of possible safety problems and to give information that will prevent damage to equipment.

WARNING

A warning indicates procedures that must be followed exactly. Personal injury can occur if the procedure is not followed.

CAUTION

A caution indicates procedures that must be followed exactly. If the procedure is not followed, damage to equipment and components can occur. Personal injury can also occur in addition to damaged or malfunctioning equipment or components.

TORQUE

This symbol is used to indicate fasteners that must be tightened to a specific torque value.

NOTE:

A note indicates an operation, procedure or instruction is important for correct service. A note can also give information that will make service quicker and easier.

Some procedures require the use of special tools for safe and correct service. Failure to use these special tools, when required, can cause injury to service personnel or damage to vehicle components.

BRAKE HOUSING

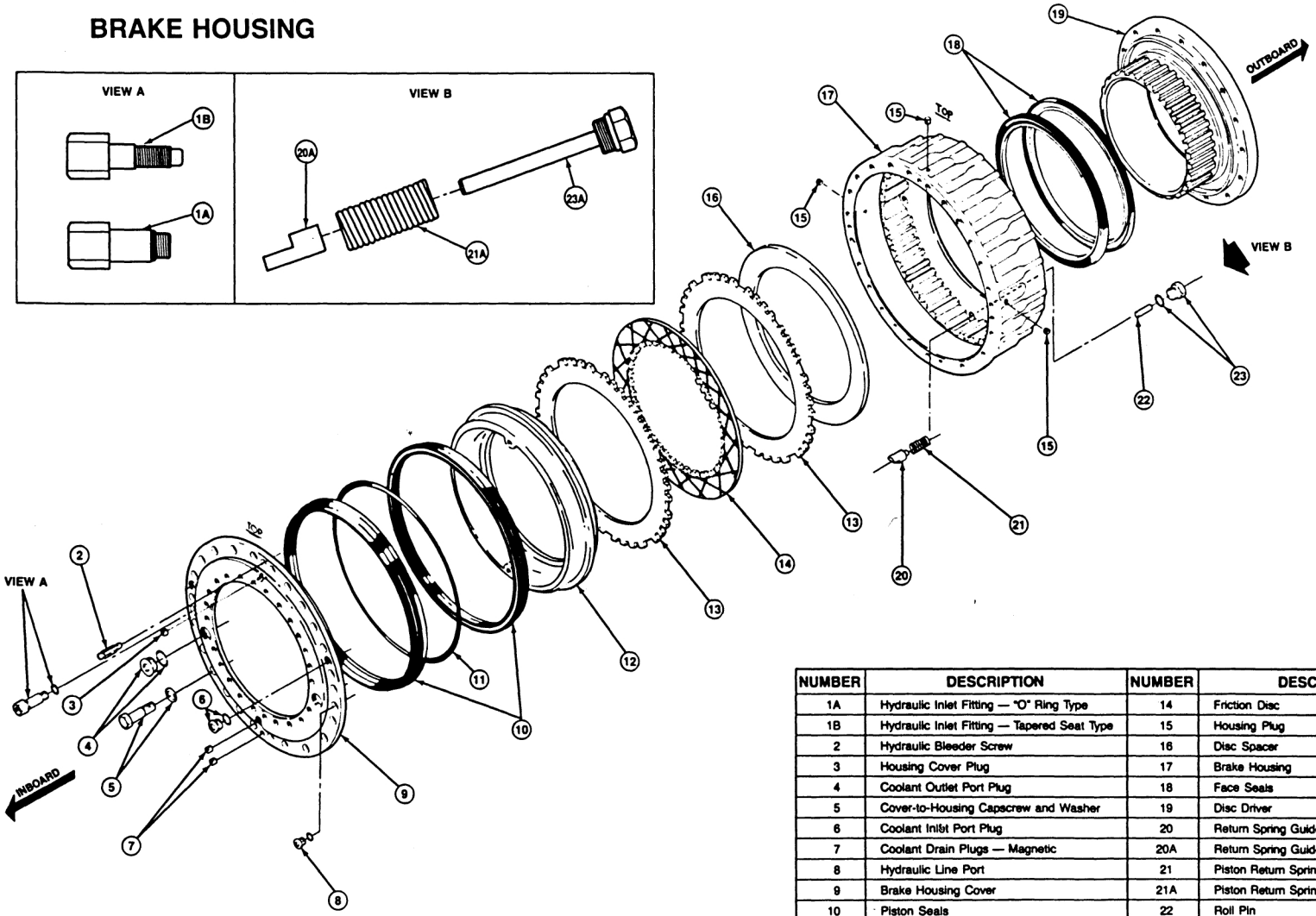

NUMBER	DESCRIPTION	NUMBER	DESCRIPTION
1A	Hydraulic Inlet Fitting — "O" Ring Type	14	Friction Disc
1B	Hydraulic Inlet Fitting — Tapered Seat Type	15	Housing Plug
2	Hydraulic Bleeder Screw	16	Disc Spacer
3	Housing Cover Plug	17	Brake Housing
4	Coolant Outlet Port Plug	18	Face Seals
5	Cover-to-Housing Capscrew and Washer	19	Disc Driver
6	Coolant Inlet Port Plug	20	Return Spring Guide — Pin Type
7	Coolant Drain Plugs — Magnetic	20A	Return Spring Guide — Hole Type
8	Hydraulic Line Port	21	Piston Return Spring — Pin Type Guide
9	Brake Housing Cover	21A	Piston Return Spring — Hole Type Guide
10	Piston Seals	22	Roll Pin
11	"O" Ring (Round Shape Piston Seals Only)	23	Piston Return Spring Plug — Pin Type Guide
12	Piston	23A	Piston Return Spring Plug — Hole Type Guide
13	Stationary Disc		

Table of Contents

Description section 1

General Information

The WDH-Series wet disc brakes are friction brakes that are hydraulically actuated. A number of friction discs and stationary discs are used in the housing depending on the requirements of the braking system. **Figure 1**.

Figure 1

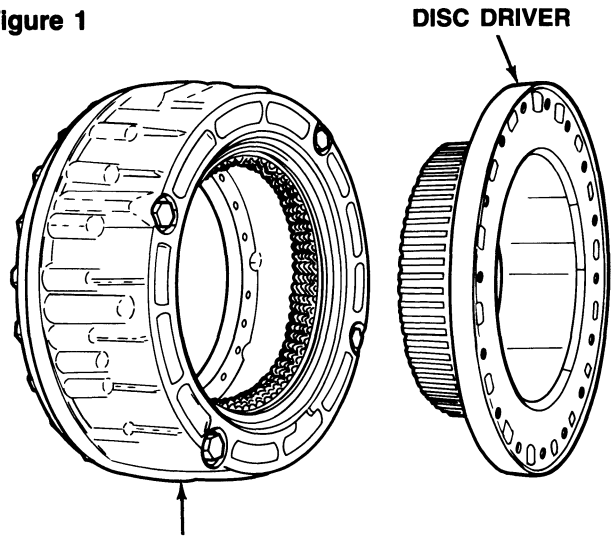

Two types of discs are in each housing; stationary discs and friction discs. The stationary discs are locked to the brake housing. The friction discs rotate with the disc driver. Each friction disc is between stationary discs. Hydraulic pressure pushes a piston against the first stationary disc. The piston pushes all of the discs together to stop the rotating of the wheel assembly. **Figure 2**.

Two types of cooling systems are used; sump cooling and forced cooling.

The sump cooling system uses the lubricant in the brake housing as a coolant. The discs are submerged in coolant. The coolant removes the heat that the discs generate during the braking operation.

Figure 2

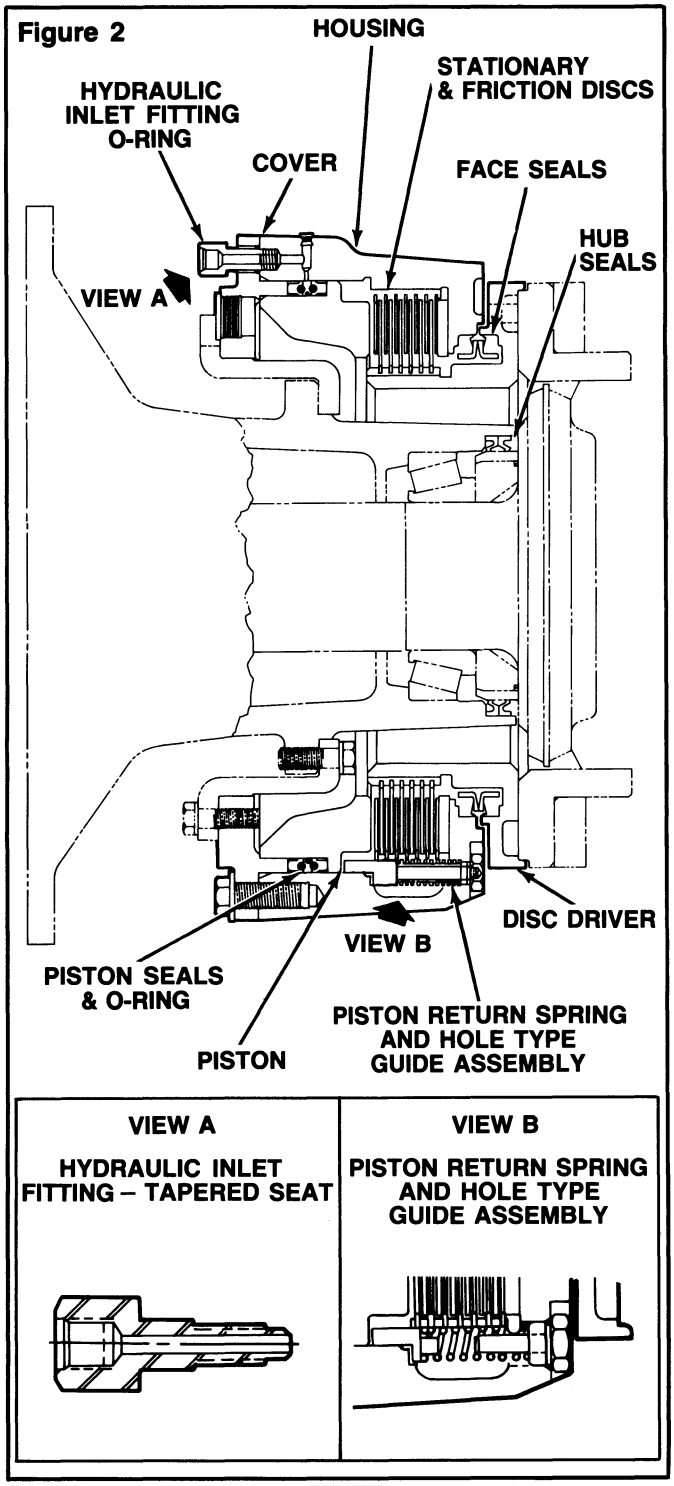

To remove additional heat from the discs a forced cooling system is used. The forced cooling system uses a circulating coolant system in the brake housing. The forced cooling system moves the fluid from a reservoir to the brake housing and returns the fluid to the reservoir.

Hub seals are used to separate the coolant in the brake housing (and axle housing in sump cooling systems) from the lubricant in the wheel end. Hub seals are used on all forced cooling systems and on most sump cooling systems.

WARNING

In sump cooling systems, the operating temperature of the coolant must never reach or exceed 250°F (120°C). Use a forced cooling system if the temperature reaches or exceeds 250°F (120°C). In a sump cooling system, if the operating temperature of the coolant reaches or exceeds 250°F (120°C), the internal components of the brake will be damaged.

Coolant Draining and Filling

section 2

Draining and Filling of Coolant in the Brake Housing

Change the coolant at the following times:

- **First Coolant Change.** Change the coolant after the first month or after the first 200-250 hours of operation.
- **Regular Maintenance Coolant Change.** Change the coolant every six months or every 3,000 hours of operation.

Sump Cooling Systems With Hub Seals

When hub seals are used in sump cooling systems, coolant is in each brake housing. At the specified times, coolant is changed in each housing.

1. Make sure the axle and brake housing assembly is in a level position.
2. Put a container under each brake housing.
3. Remove the two magnetic drain plugs from the bottom of each brake housing. Drain the coolant from each brake housing. Discard the coolant. **Figure 4**.
4. Clean the drain plugs. Install and tighten the drain plugs to a minimum torque of 20 lb-ft (27 N•m).
5. Remove the coolant fill plugs that are next to the fittings for the hydraulic fluid. **Figure 4**.

Figure 4

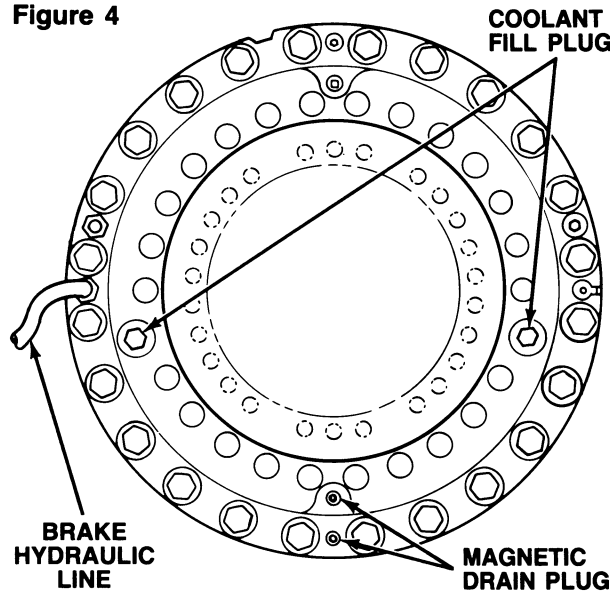

6. Fill the brake housings with the specified coolant until the coolant flows from the bottom of the holes for the fill plugs. See **Section 9, Coolant and Hydraulic Fluid Specifications** for the specified coolant.
7. Install and tighten the fill plugs to 60-75 lb-ft (81-102 N•m).
8. Operate the brakes. Check for leaks and that the brake system operates correctly.

section 2 Coolant Draining and Filling

Sump Cooling Systems Without Hub Seals

In sump cooling systems without hub seals, the brake housings, the disc driver assemblies and the axle housing use the same fluid. The fluid cools the discs in the brake housing and also lubricates and cools the components in the disc driver assemblies and the axle housing. At the specified times, fluid is changed in the complete assembly.

1. Make sure the axle and brake housing assembly is in a level position.

2. Put a container under:

   - Each Brake Housing.
   - Each Disc Driver Assembly.
   - The Bottom of the Axle Housing.

NOTE:

Give enough time when the assembly is drained to remove all of the fluid.

3. Drain the fluid from the bottom of:

   - Each Brake Housing. Remove the two magnetic drain plugs from the bottom of each brake housing to drain the fluid.
   - Each Disc Driver Assembly. See the recommended procedure of the equipment manufacturer on draining the fluid.
   - The Axle Housing. See the recommended procedure of the equipment manufacturer on draining the fluid.

   Discard the coolant.

4. Clean the drain plugs. Install the drain plugs in the bottom of the brake housings and tighten to a minimum torque of 20 lb-ft (27 N•m). Install the plugs in the disc driver assemblies and the axle housing. Tighten the plugs to the torque recommended by the equipment manufacturer. T

NOTE:

Give enough time when the assembly is filled to make sure fluid flows through the complete assembly.

5. Remove the fill plug from the axle housing. Remove the fill plugs from the disc driver assemblies.

NOTE:

Use the specified type and the specified amount of coolant fluid when the assembly is filled. See Section 9, Coolant and Hydraulic Fluid Specifications.

6. Fill the axle housing until fluid flows from the bottom of the hole for the fill plug.

7. Fill each disc driver assembly until fluid flows from the bottom of the holes of the fill plug.

8. Install the fill plugs in the axle housing and the disc driver assemblies. Tighten to the specified torque of the equipment manufacturer. T

9. Operate the brakes. Check for leaks and that the brake system operates correctly.

Forced Cooling Systems

Brake housings with forced cooling systems use a pump to move coolant in and out of the housings. Coolant is supplied from a reservoir. The movement of coolant removes heat from the discs. A hub seal separates the brake housing from the disc driver assembly. At the specified times, coolant is changed in the complete brake cooling system.

1. Make sure the axle and brake housing assembly is in a level position.

2. Put a container under each brake housing.

3. If the cooling system uses shut-off valves, make sure the valves are in the ON position so that fluid flows to the brake housing.

4. Remove the drain plugs from the bottom of each brake housing. Drain the coolant from each brake housing. Discard the coolant. **Figure 5**.

5. Clean the drain plugs. Install and tighten the drain plugs to a minimum torque of 20 lb-ft (27 N•m). T

6. Fill the reservoir with the specified coolant. See **Section 9, Coolant and Hydraulic Fluid Specifications.**

7. Loosen the plug in the top of the cover of the brake housing. When the housing is filled, the loose plug permits air to be removed. **Figure 5**.

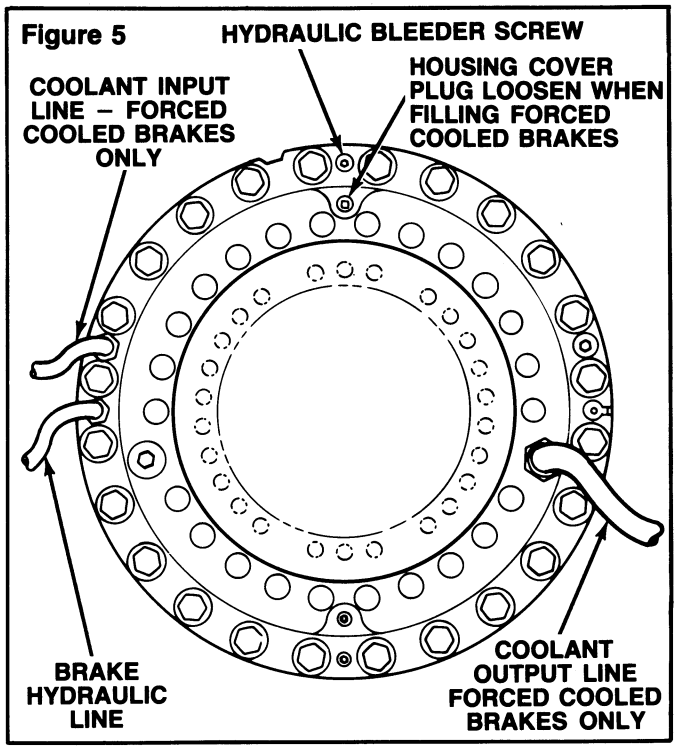

Figure 5

8. Put the transmission in the NEUTRAL position and start the engine. When the level in the reservoir goes down, add coolant to adjust the level to the specified position. See the recommendations of the equipment manufacturer for the specified level in the reservoir. Stop the engine if the coolant leaks from the loose plug in the cover of the housing.

9. Tighten the plug at the top of the cover of the brake housing to a minimum torque of 20 lb-ft (27 N•m). T

10. Operate the brakes. Check for leaks and that the brake system operates correctly.

section 3 Removal

Removing the Brake Housing

1. Use a jack to raise the vehicle until the tires are off the ground.

2. Put safety stands under the spring seats to support the axle. Remove the jack.

WARNING

Do not work under a vehicle that is only supported by jacks or lifting tools. Jacks and lifting tools can fall over and cause injury.

3. Remove the nuts that fasten the tire and rim assembly to the hub. Remove the tire and rim assembly.

NOTE:

Unless a fluid change is necessary, do not drain the fluid from the axle housing.

4. If necessary, drain the fluid from the axle housing. Put a container under the axle housing. Remove the drain plug from the bottom of the axle housing. Drain the fluid from the axle housing. Install the drain plug. **Figure 6**.

5. Drain the fluid from the wheel ends. See the procedure of the equipment manufacturer.

6. Drain the coolant from the brake housing. Use one of the following procedures.

Forced Cooling Systems With Shut-Off Valves

Use the following procedure to remove the minimum amount of coolant from the forced cooling system.

A. Measure and record the amount of coolant that is drained from the housing.

B. Make sure the shut-off valves are in the OFF position so that coolant does not flow into the brake housing.

Figure 6 LOCATION OF PLUGS – HOUSING BOWL (TYPICAL)

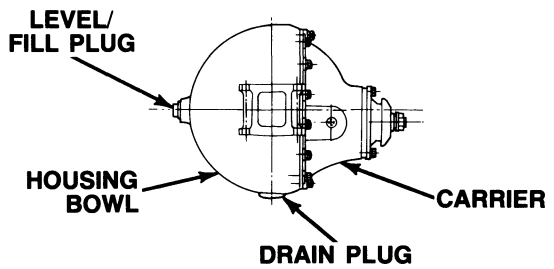

PINION STANDARD

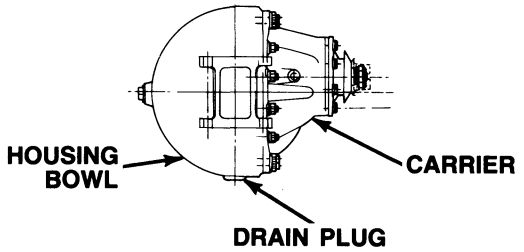

PINION INVERTED

C. Put a container under the inboard side of the brake housing.

D. Remove the drain plugs from the bottom of the inboard side of the brake housing. Drain the coolant from the housing. **Figure 5**.

E. When the coolant is drained, install the drain plug.

Forced Cooling Systems Without Shut-Off Valves

Use this procedure to remove the minimum amount of coolant from the forced cooling system.

A. Measure and record the amount of coolant that is drained from the housing.

B. Put a container under the inboard side of the brake housing.

C. Disconnect the coolant output line from the brake housing. Put a plug in the coolant output line. Drain the coolant until the coolant does not flow from the output port. **Figure 5**.

D. Disconnect the coolant input line from the brake housing. Put a plug in the coolant input line. Drain the coolant until the coolant does not flow from the input port. **Figure 5**.

E. Remove the drain plug from the bottom of the brake housing. Drain all of the coolant that remains in the brake housing.

F. When the coolant is drained, install the drain plug.

Sump Cooling Systems

NOTE:

On housings that use hub seals most of the coolant is removed when the fluid is removed from the wheel end.

A. Put a container under the inboard side of the brake housing.

B. Remove the drain plug from the bottom of the brake housing. Drain all of the coolant from the brake housing. **Figure 4**.

C. When the coolant is drained, install the drain plug.

⚠ *CAUTION*

Do not drop the face seals. The metal sealing rings of the face seals will be damaged if they are dropped.

7. Remove the wheel end and the disc driver according to the procedure of the equipment manufacturer. **Figure 7**.

Figure 7

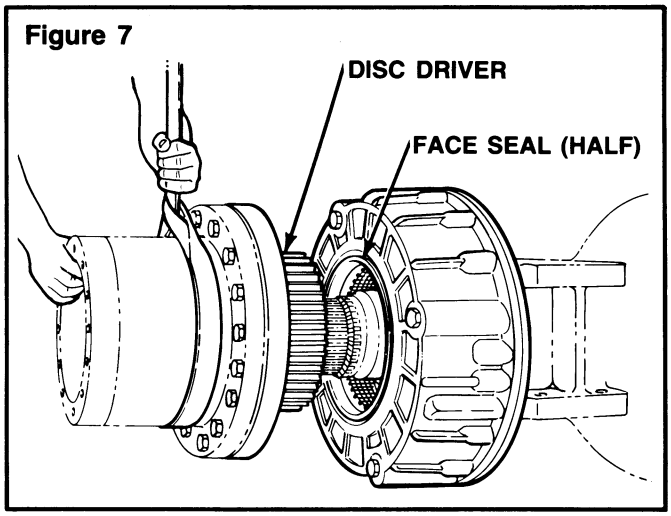

8. Remove the face seals from the brake housing and the disc driver. **Figure 8**.

9. Disconnect the hydraulic fluid lines from the housing. Put a plug in the end of the lines to prevent dirt from coming into the system.

Figure 8

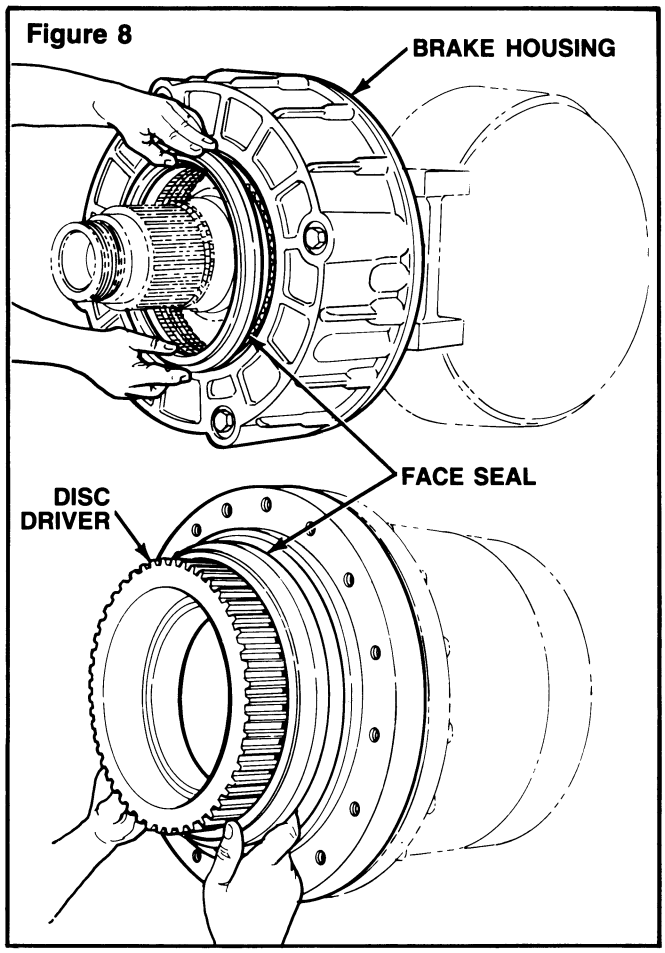

10. Use a strap and a lifting device to support the brake housing. **Figure 9**.

11. Remove the capscrews that fasten the brake housing to the spindle.

12. Use a lifting device to remove the brake housing from the spindle. Put the housing on a bench so that the cover is toward you.

Figure 9

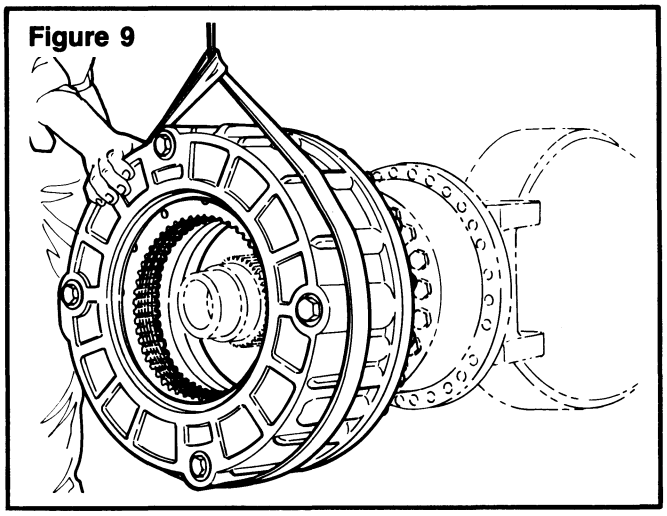

Disassembly section 4

Disassembling the Brake Housing

1. Make sure the cover of the housing is toward you. Remove the following components from the cover of the brake housing. **Figure 10**.
   - Bleeder Screw.
   - Inlet Fitting for the Hydraulic Line. Two types of fittings are used: a tapered seat fitting and an O-ring fitting.
   - Plug. The plug is opposite from the hydraulic line fitting on the cover of the brake housing.

Figure 10

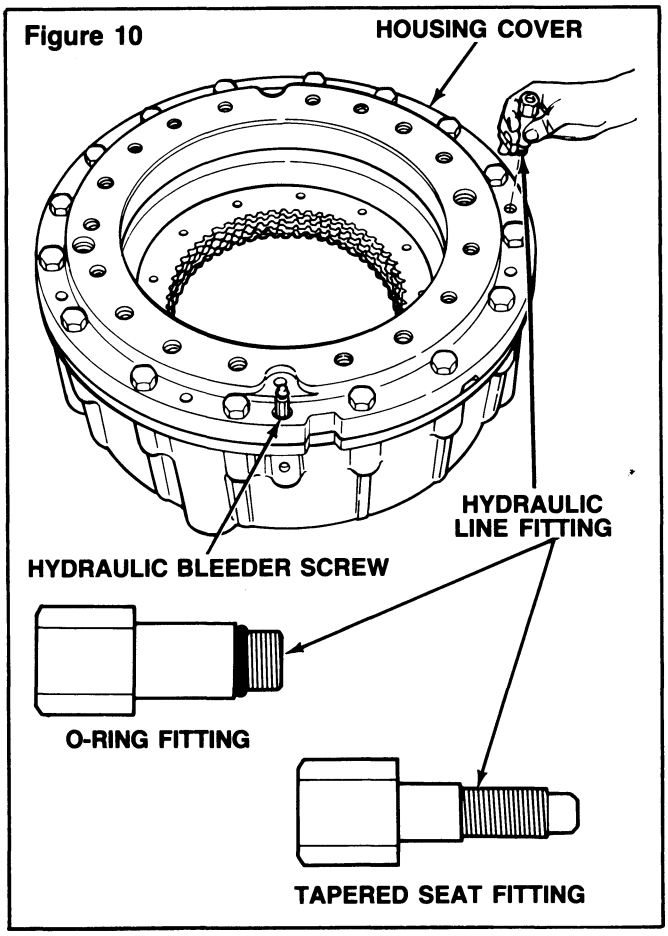

2. Remove the cover from the housing with the following procedure: **Figure 11**.
   - **A.** Remove the capscrews and washers that fasten the cover to the housing.
   - **B.** Install two eye bolts in the cover-to-spindle mounting holes.
   - **C.** Attach a strap and a lifting device on the eye bolts.

Figure 11

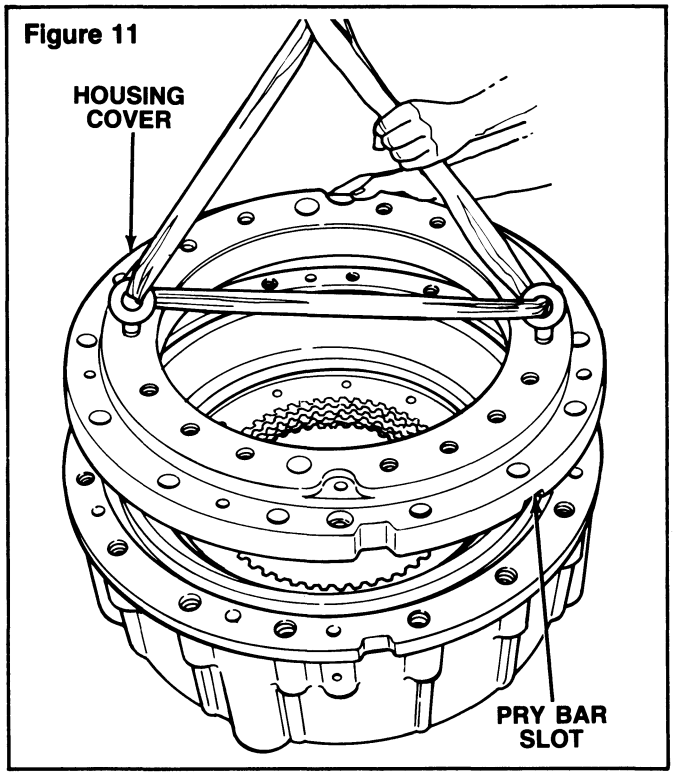

NOTE:
If necessary, put a pry bar in the slots on the cover to separate the cover from the housing.

   - **D.** Lift the cover out off the housing.

3. Remove the piston from the housing with the following procedure: **Figure 12**.

   A. Install an eye bolt into the threaded holes of the piston.

   B. Connect a strap and a lifting device to the eye bolts.

   C. Carefully lift the piston straight out of the housing. DO NOT DAMAGE THE SURFACES ON THE HOUSING AND THE PISTON.

Figure 12

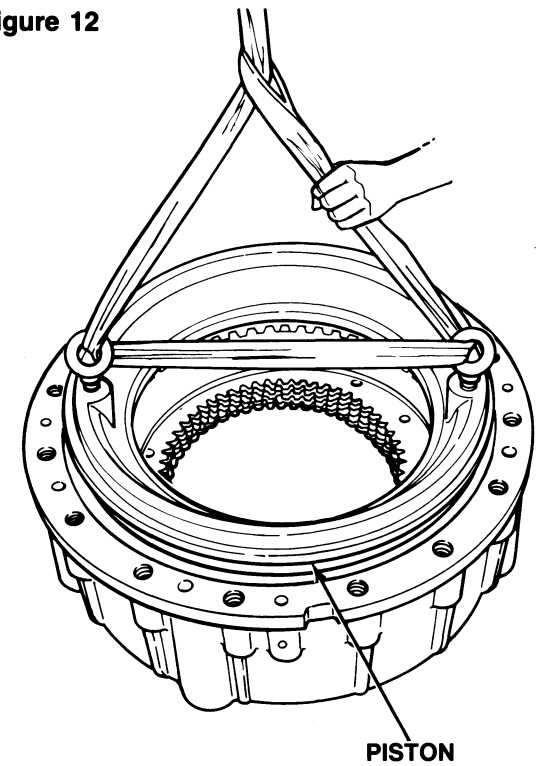

4. Remove the O-ring (if equipped) and the two seals from the piston. Inspect the O-ring and the seals and replace if damaged. **Figure 13 and Figure 14**.

NOTE:

Two sealing arrangements between the piston and the housing are used:

1. One O-ring and Two Rubber Round-Shape Seals. **Figure 13**.

2. Two 'Z' Type Seals. **Figure 14**.

Figure 13

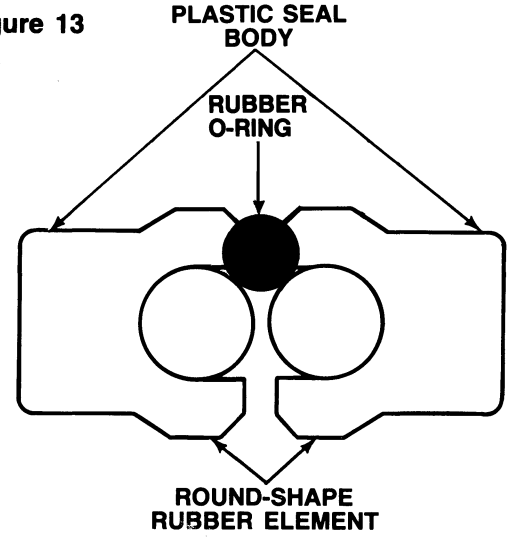

Figure 14

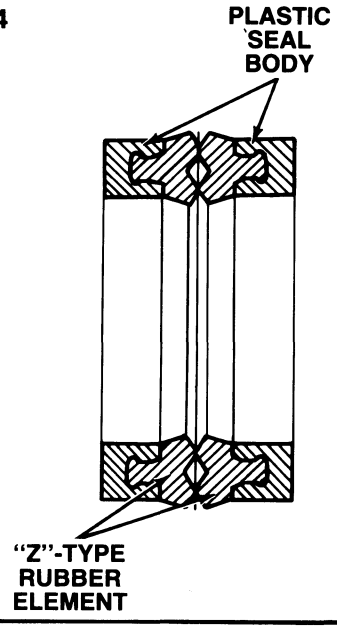

5. Remove all of the friction and stationary discs from the housing. **Figure 15**.

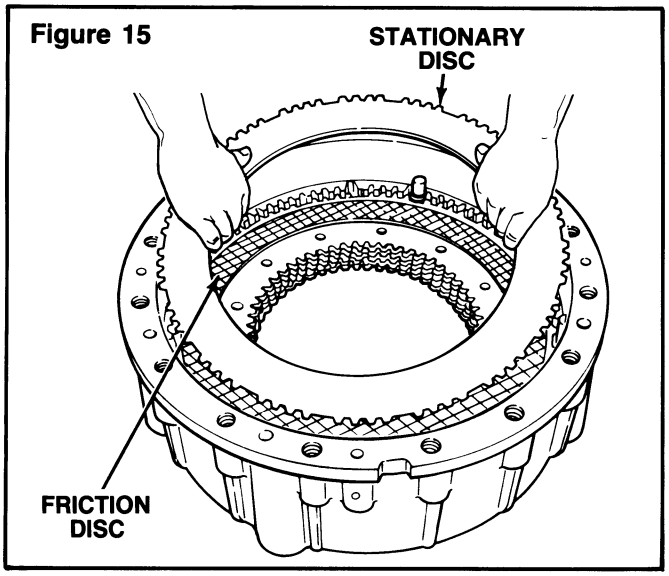

Figure 15

6. Remove the disc spacer from the bottom of the brake housing. **Figure 16**.

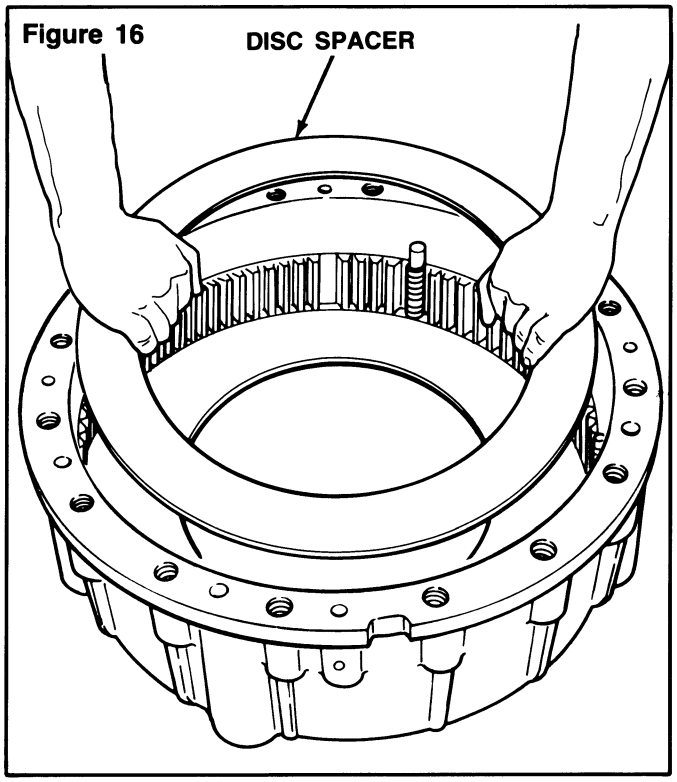

Figure 16

7. If necessary, remove the four piston return spring assemblies with the following procedure: **Figure 17**.

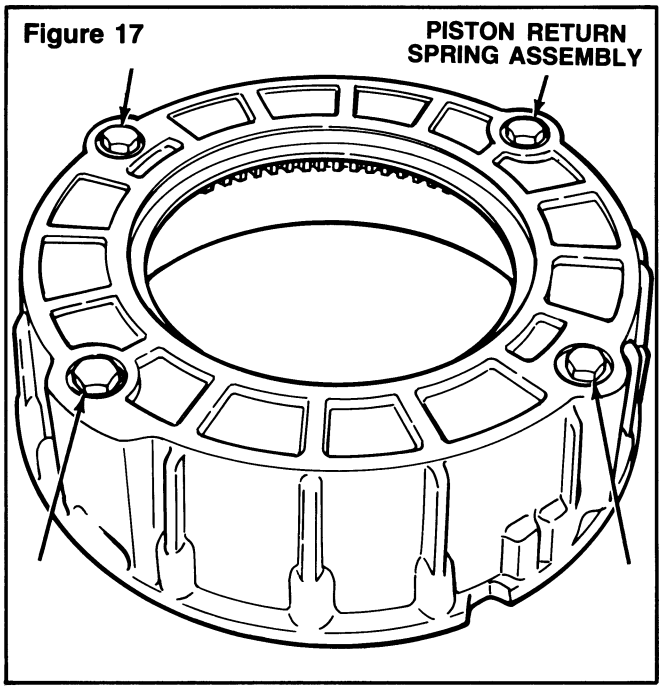

Figure 17

WARNING

The piston return spring assembly has pressure applied to the plug. Use the following procedure to remove the plug from the assembly. If the wrong procedure is used, the spring can push the plug out of the housing with enough force to cause injury.

A. Put the brake housing on a bench so that the outboard side is toward you.

B. Use a press to apply pressure to the plug. **Figure 18**.

WARNING

The press must always touch the plug until the coils of the spring are in the fully expanded position.

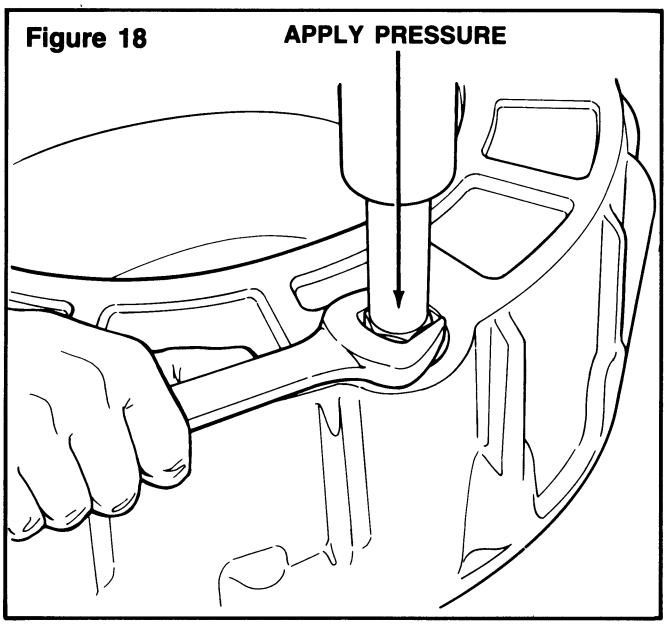

Figure 18

C. Slowly release pressure while disengaging the threads on the plug from the housing.

D. After the threads of the plug are disengaged, slowly release pressure on the plug until the coils of the spring are in the fully expanded position. **Figure 19**.

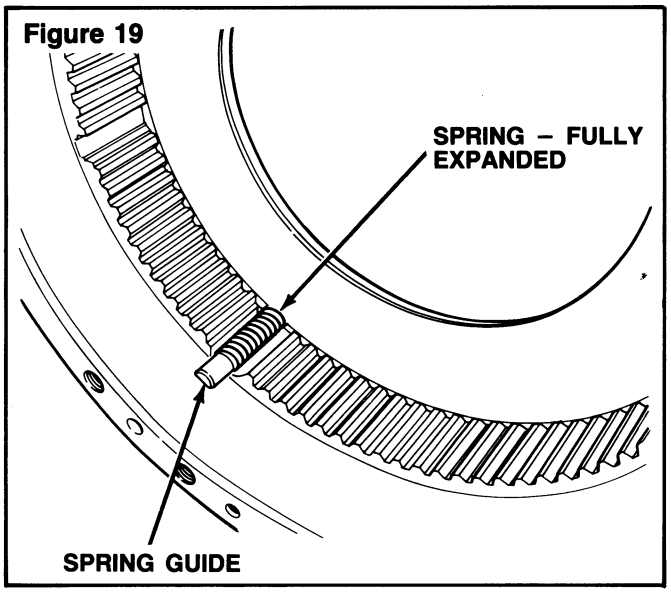

Figure 19

E. Remove the plug and pin assembly, the spring and the spring guide from the housing. **Figure 20**.

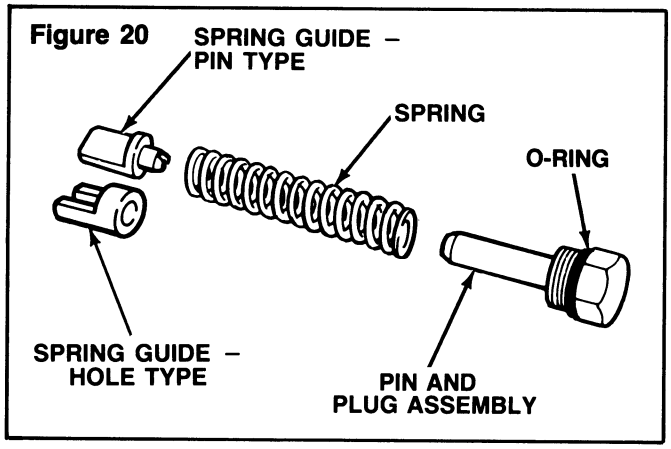

Figure 20

NOTE:

Two types of spring guides are used. One type of guide has a cylinder on the bottom that is installed inside the pin. The other type of guide has a hole in the bottom so that the end of the pin is installed inside the guide.

F. Inspect the O-ring on the plug. If necessary, remove and replace the O-ring.

Preparing the Parts for Assembly

section 5

Cleaning the Ground and the Polished Parts

CAUTION

DO NOT clean the ground or polished parts in a hot solution tank, water, steam or alkaline solution.

1. Use a cleaning solvent to clean the ground or polished parts or surfaces. Kerosene or diesel fuel can be used to clean the parts. DO NOT USE GASOLINE.

WARNING

Be careful when using cleaning solvents. Follow the instructions supplied by the manufacturer to safely use the solvent.

2. Use a knife or a tool with a sharp blade to remove gasket material from the parts. Be careful not to damage the surfaces on the parts.

Cleaning the Parts With a Rough Finish

1. Parts with a rough finish can be cleaned with cleaning solvent, or in a hot solution tank with a weak alkaline solution.

2. Parts must remain in the hot solution tanks until completely cleaned and heated.

WARNING

Be careful when using the hot solution tanks and the alkaline solutions. Follow the instructions supplied by the alkaline manufacturer to safely use the tanks and the solutions.

3. Parts must be washed with water until the alkaline solution is removed.

Cleaning the Wet Disc Brake Assembly

1. Use steam to clean the wet disc brake and axle assembly on the outside to remove dirt.

2. Before the assembly is cleaned, close or put a cover over all the openings. Breathers or vents in the axle assembly are some examples of openings.

Drying the Parts That Have Been Cleaned

1. Dry the parts immediately after the parts are cleaned and washed.

2. Dry the parts with soft, clean paper or rags.

3. The parts, except for the bearing cones, can be dried with compressed air.

CAUTION

The bearing cones can be damaged if the cones are dried by rotating with compressed air.

Preventing Corrosion and Rust on the Cleaned Parts

1. Apply the fluid used in the brake housing to the cleaned and the dried parts that are not damaged and are to be assembled. See **Section 9, Coolant and Hydraulic Fluid Specifications.**

2. Apply to all the surfaces, a special material that prevents corrosion and rust. Put the parts in a special paper that prevents corrosion and rust.

Inspecting the Parts

Inspect all the parts before assembling the wet disc brake. Check all parts for wear and replace the damaged parts. Replacing worn or damaged parts prevents the failure of the assembly later.

Face Seals

Inspect the rubber element and the metal sealing ring of the face seal. Make sure the inner and the outer diameter of the sealing ring is flat. Replace any worn or damaged parts of the face seals. If the rubber element of one face seal is worn or damaged, both of the rubber elements must be replaced. If one metal sealing ring is damaged, both face seal assemblies must be replaced. **Figure 21**.

Figure 21

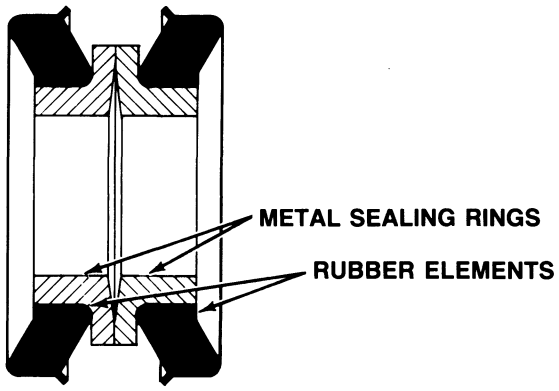

FACE SEAL ASSEMBLY

Applying the Silicone (RTV) Gasket Material

Silicone (RTV) gasket material is used between the following mounting surfaces:

- Brake Housing and Cover.
- Brake Housing Assembly and Spindle.

NOTE:

The following silicone gasket products or equivalent can be used on Rockwell components.

1. Dow Corning Silicone Rubber Sealant, Number 732 Black.
2. General Electric, Number RTV-1473 Black.
3. From Rockwell International:
   - 40 pound containers, Part Number 1199-Q-2981.
   - Ten ounce tubes, Part Number 1250-X-388.
   - Three ounce tubes, Part Number 1199-T-3842.

WARNING

Some acid vapor is present when silicone gasket material is applied. To prevent possible injury, make sure there is good ventilation in the work area. If the silicone gasket material gets in your eyes, flush your eyes with water for 15 minutes. Have your eyes checked by a doctor.

1. Remove all gasket material from both surfaces.
2. Clean the surfaces where the silicone gasket material will be applied. Remove all oil, grease, dirt and moisture.
3. Dry both surfaces.
4. Apply a 1/8 inch (3.08 mm) diameter continuous bead of the silicone gasket material around the edge of all the fastener holes on that surface.

CAUTION

The amount of silicone gasket material that is applied must not exceed a 1/8 inch (3.0 mm) diameter bead. Too much gasket material blocks the lubrication passages and damages the components.

5. Assemble the components immediately to permit the silicone gasket material to compress equally between the parts. Tighten the fasteners to the required torque value for that size fastener. There is not a special procedure or an additional torque value required.
6. Wait 20 minutes before filling the assembly with fluid.

Repairing or Replacing the Parts

Replace worn or damaged parts of the wet disc brake assembly. The following are some examples to check.

1. Replace any fasteners if the corners of the head are worn.
2. Replace the washers if damaged.
3. Replace the oil seals, face seals and gaskets when the components are separated from each other.
4. Clean the parts before applying silicone gasket material.

5. Remove small damage from the parts that have machined or ground surfaces. Use a fine-tooth file, india stone, emery cloth or crocus cloth for this purpose.

6. Clean and repair the threads of the fasteners and the holes. Use a tap or a die of the correct size or a fine-tooth file for this purpose.

CAUTION

The threads must be clean and not damaged so that accurate adjustments and correct torque values can be applied to fasteners and parts.

7. Tighten all fasteners to the correct torque value. See **Section 8, Torque Chart** for the torque value of the fasteners.

section 6 Assembly

Assembling the Brake Housing

1. If the piston return spring assemblies were removed, the assemblies must be installed in the housing. See the following procedure.

⚠ WARNING

The piston return spring assembly has pressure applied to the plug. Use the following procedure to install the plug in the housing. If the wrong procedure is used, the spring can push the plug out of the housing with enough force to cause injury.

NOTE:

Two types of spring guides are used. One type of guide has a pin on the bottom that is installed inside the pin. The other type of guide has a hole in the bottom so that the end of the pin is installed in the guide. Use the correct parts for the piston return spring assembly. Do not mix parts of the different assemblies. Use only one type of spring guide on each brake assembly. **Figure 22.**

Figure 22

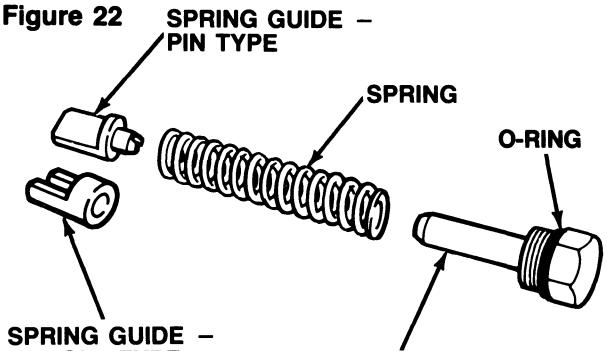

A. Put the brake housing so that the disc driver side of the housing is toward you.

B. Install the O-ring on the plug.

C. Put the spring guide inside the brake housing below the plug hole. Make sure the flat area of the guide is against the housing. **Figure 23.**

Figure 23

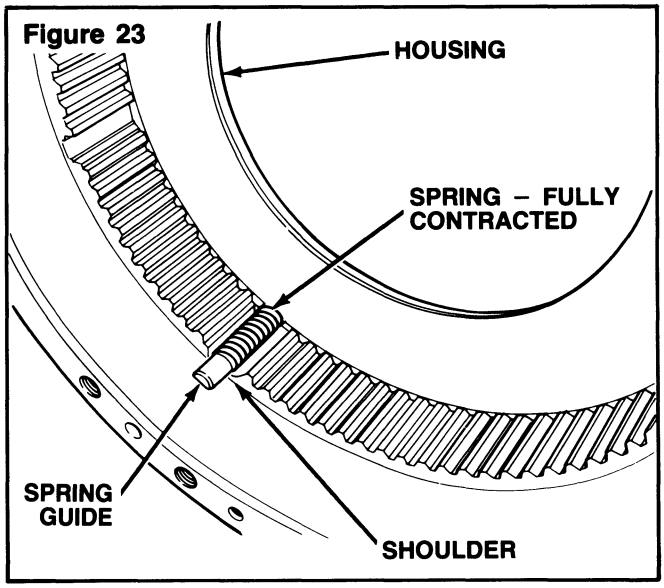

D. Install the spring on top of the guide.

E. Put the plug and pin assembly in the hole in the brake housing and through the return spring.

F. Apply and hold pressure on the plug while installing the plug into the housing. Make sure that the roll pin is correctly installed in the spring guide and that the flat areas on the spring guide are against the housing. When the threads engage the housing, release the pressure on the plug. **Figure 24.**

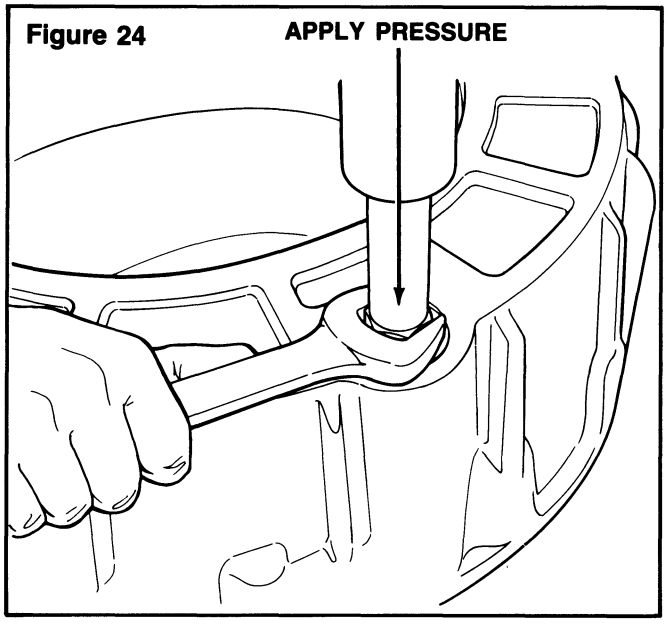

Figure 24

G. Tighten the plug to 60-75 lb-ft (81-102 N•m).

2. Put the brake housing on a bench so that the cover side of the housing is toward you.

3. Install the disc spacer in the bottom of the brake housing. **Figure 25.**

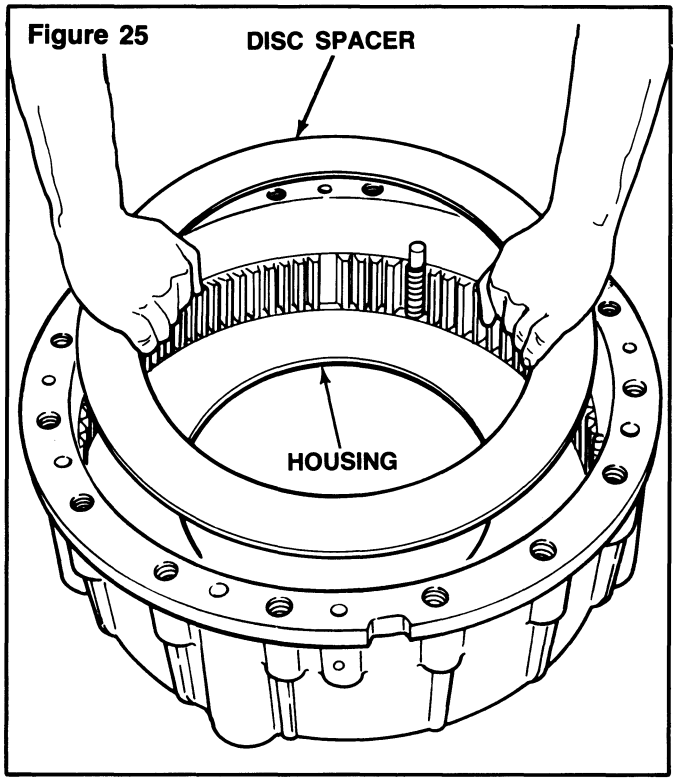

Figure 25

4. Install the disc pack as follows:

A. Apply the same fluid used in the brake system to each surface of the discs. See **Section 9, Coolant and Hydraulic Fluid Specifications.**

B. Install a stationary disc in the housing. Make sure the splines on the outer diameter of the stationary disc engage the splines in the brake housing. Make sure the wide spaces on the outer diameter of the disc are over the return spring assemblies. **Figure 26.**

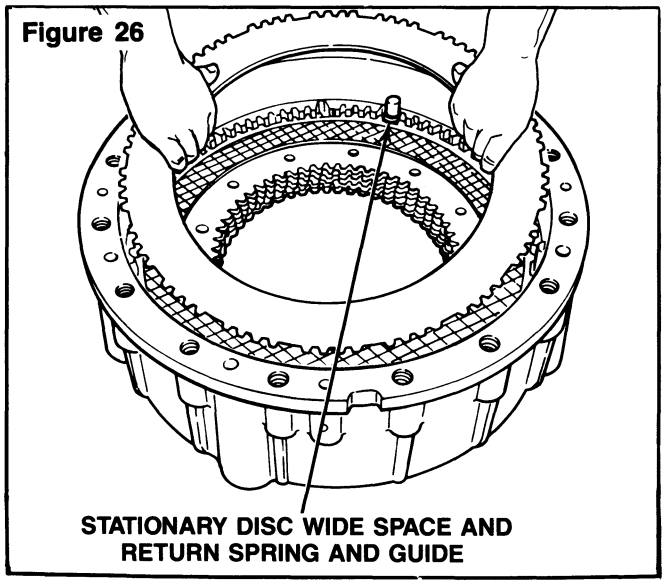

Figure 26

C. Install a friction disc in the housing. **Figure 27.**

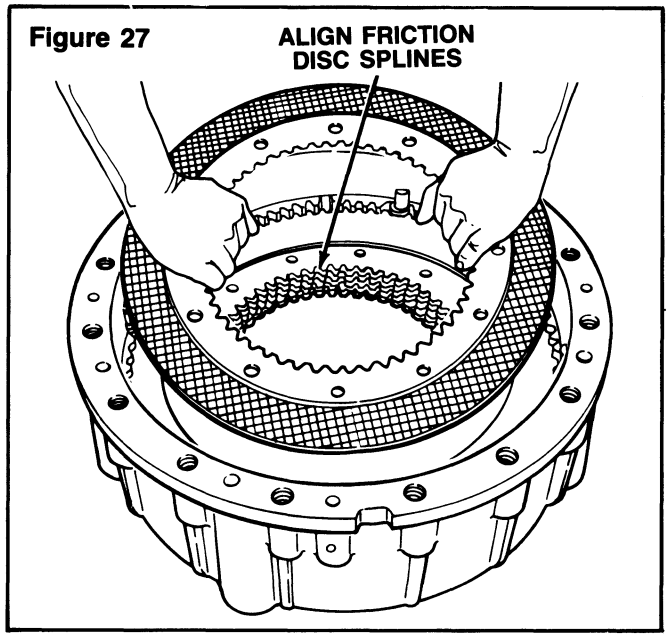

Figure 27

D. Complete the installation of the disc pack. Repeat Steps **B** and **C** of this procedure until all of the stationary discs and friction discs are installed. Make sure that a friction disc is installed between each stationary disc. Make sure that a stationary disc is the last disc installed in the housing.

5. Align all of the teeth on the inner diameter of the friction discs to install the disc driver. **Figure 27.**

6. Put two eye bolts in the piston. Use a lifting device to lower the piston into the housing until the piston is installed on the guides of the return springs. Make sure the surfaces on the piston and the housing are not damaged when the piston is installed. **Figure 28.**

Figure 28

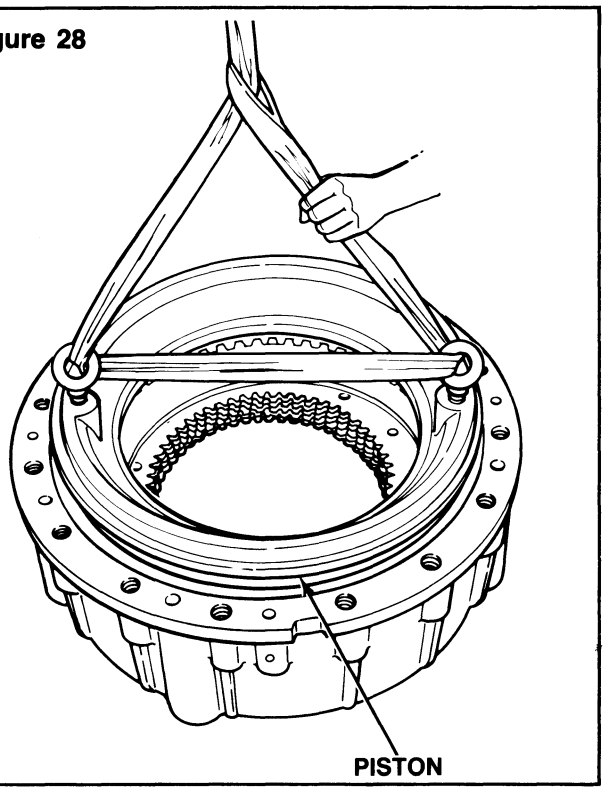

NOTE:

Two sealing arrangements between the piston and the housing are used:

1. **One O-ring and Two Rubber Round-Shape Seals. Figure 29.**

Figure 29

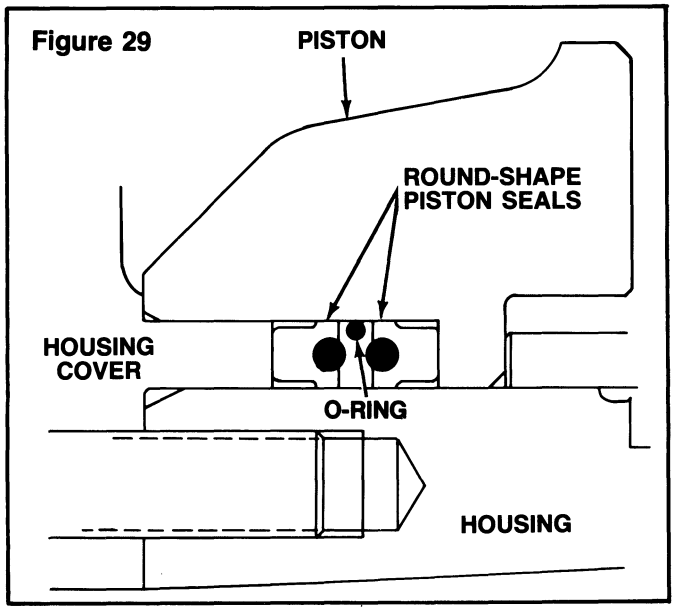

2. **Two 'Z'-Type Seals. Figure 30.**

Figure 30

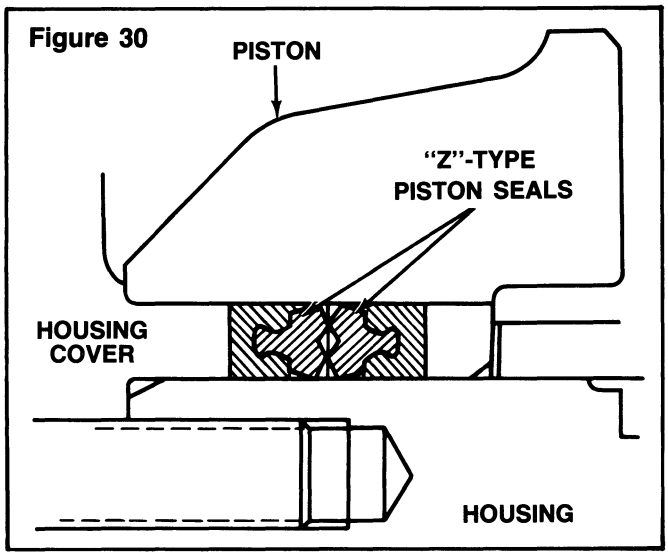

CAUTION

Use fingers or a non-metallic object to install the seals (and the O-ring if used) between the housing and the piston. Use fingers or a non-metallic object to prevent damage to the surfaces of the piston and the housing. Fluid can leak between the housing and the piston if the surfaces are damaged.

7. Put the first seal in the space between the housing and the piston. The rubber part of the seal must be toward you. Push on the seal until the complete plastic bottom surface of the seal touch the shoulder of the piston. **Figure 31.**

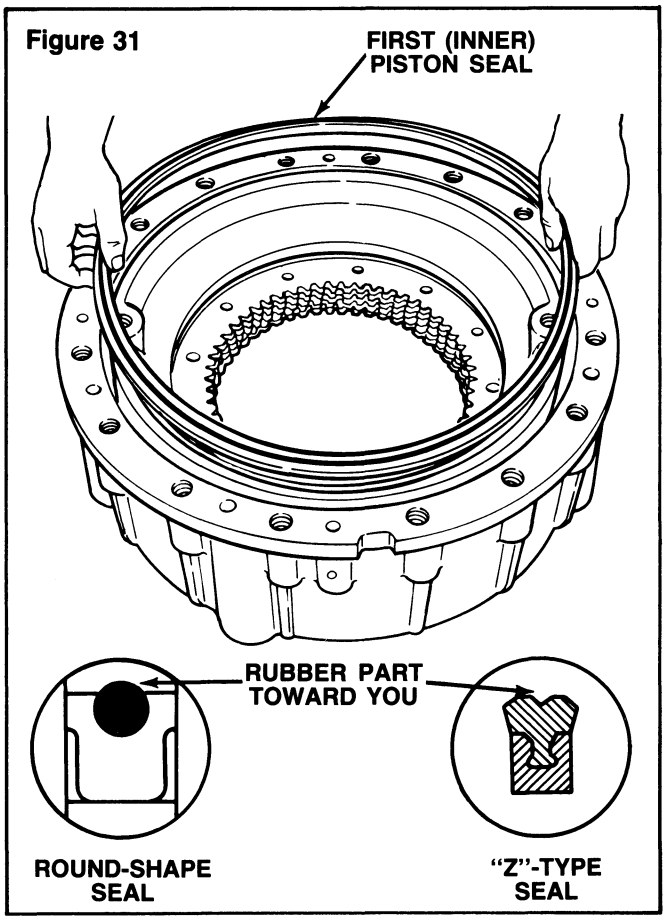

Figure 31

8. On housings that use round-shape seals, install the O-ring around the outer diameter of the piston. Push on the O-ring until the entire bottom surface of the O-ring touches the top of the first seal. **Figure 32.**

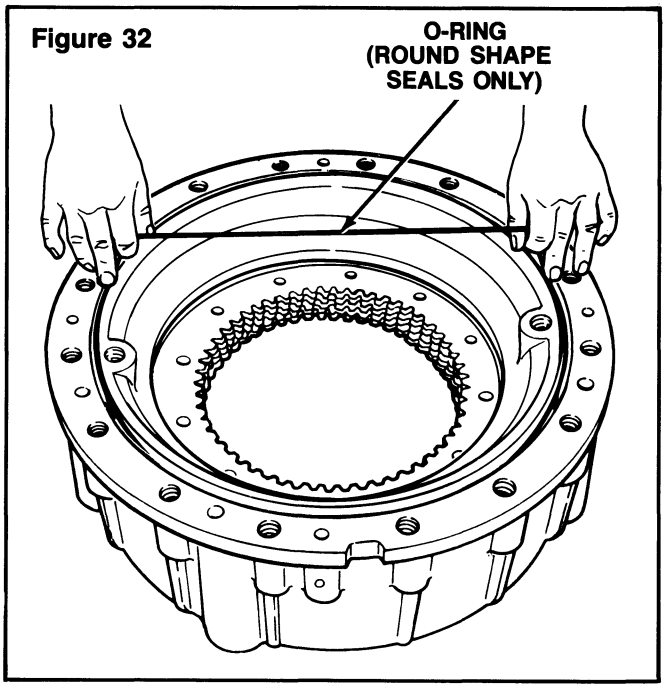

Figure 32

9. Put the second seal in the space between the housing and the piston on top of the first seal. The rubber part of the seal must be away from you. Install the second seal according to the following procedure: **Figure 33.**

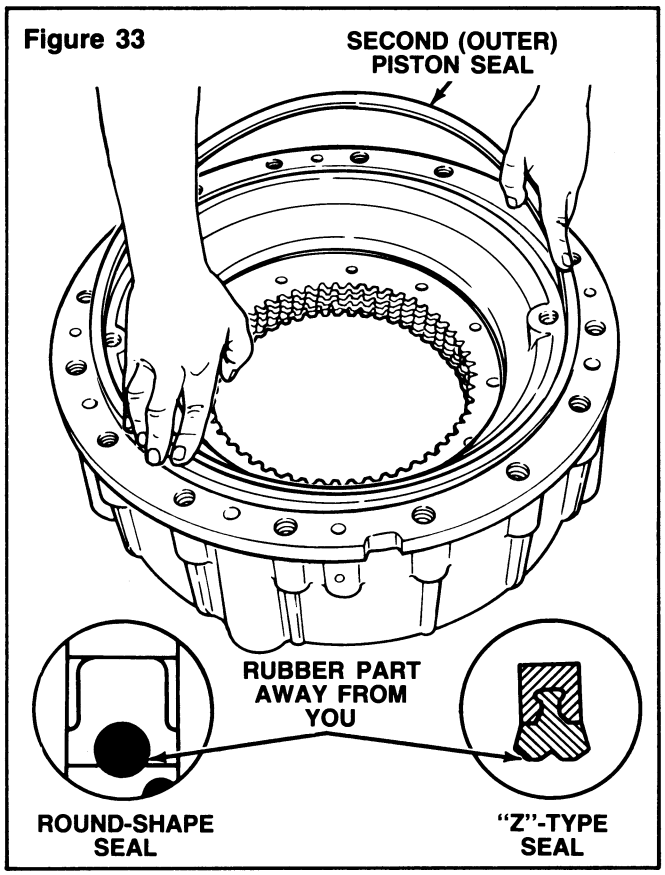

Figure 33

- Round-Shape Seals. Push on the side of the seal that is toward the inner diameter of the housing until the rubber part of the seal touches the O-ring. Make sure the seal is correctly installed in the housing. The seals must be parallel to each other. Install the complete seal with this method.
- 'Z'-Type Seals. Push on the plastic part of the seal until the rubber parts of the seals touch.

10. Apply a bead of silicone gasket material on the brake housing where the cover is mounted. The bead of gasket material also goes around each housing-to-cover fastener hole. See Applying Silicone (RTV) Gasket Material on page 16. **Figure 34.**

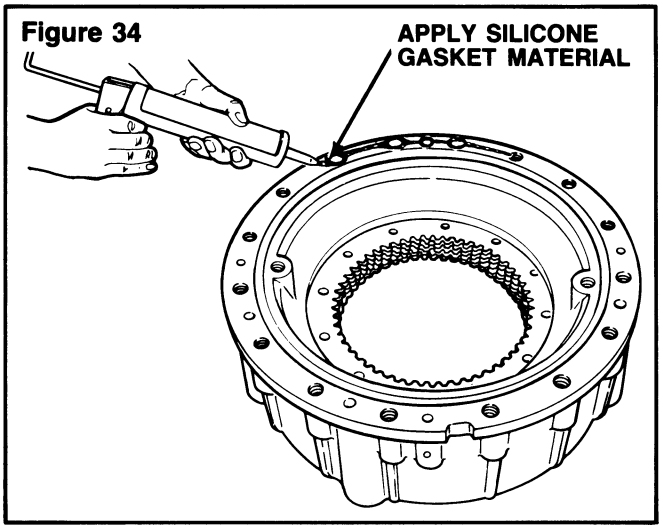

Figure 34

11. Install the cover on the housing with the following procedure: **Figure 35.**

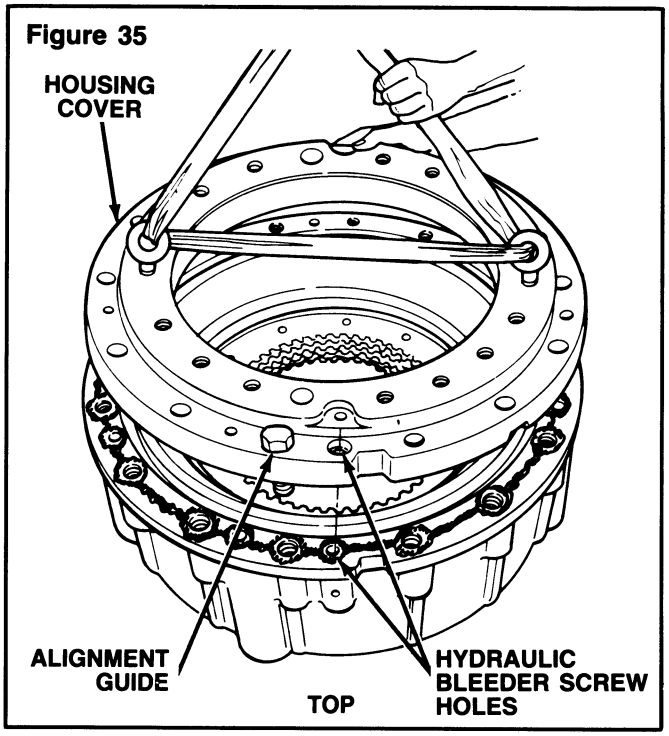

Figure 35

A. Install two eye bolts in the cover-to-spindle mounting holes.

B. Attach a lifting device to the eye bolts.

NOTE:

Use the two of the capscrews that fasten the cover to the housing as guides to install the cover on the housing correctly.

C. Lift the cover over the housing so that the holes for the bleeder screw and the drain plugs are aligned. Install the cover on the housing.

12. Install the capscrews and washers that fasten the cover to the housing. Tighten to the specified torque. See **Section 8, Torque Chart.**

13. Install and tighten the following components on the back (inboard) side of the cover of the brake housing: **Figure 36.**

Figure 36

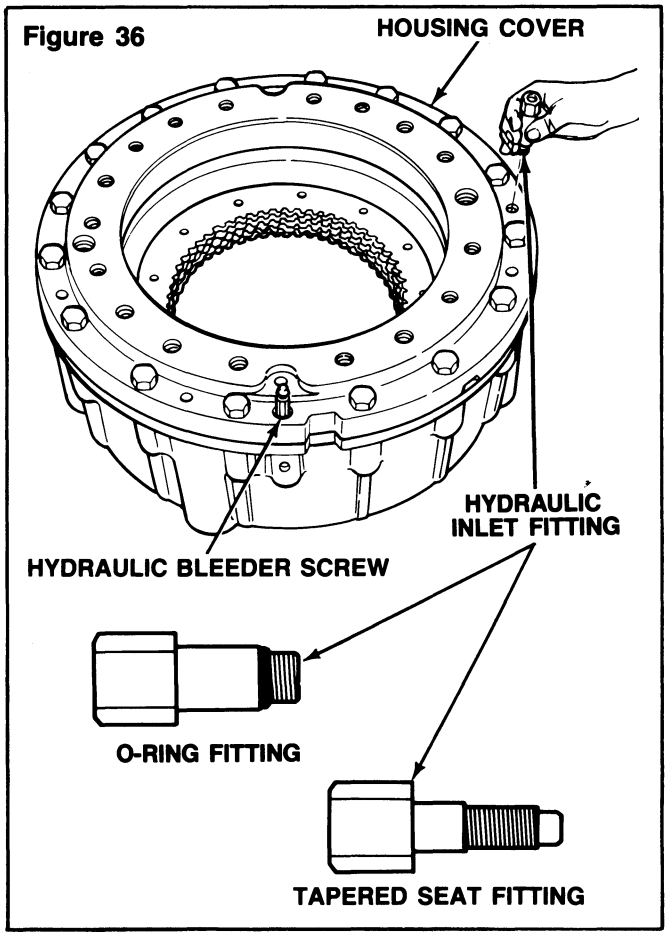

- Bleeder Screw: Tighten to 15-20 lb-ft (20-27 N•m). T

CAUTION

Use the correct fitting. Do not replace a tapered seat fitting with an O-ring fitting. Do not replace an O-ring fitting with a tapered seat fitting. If the wrong fitting is used, hydraulic fluid will leak.

- Hydraulic Line Fitting: Two types of fittings are used: a tapered seat fitting and an O-ring fitting. Install the fittings as follows:
  - Tapered Seat Fitting: Make sure all of the threads are clean. Install the fitting in the brake housing. Tighten the fitting to 25-35 lb-ft (34-47 N•m) BUT DO NOT TIGHTEN THE TAPERED SEAT FITTING MORE THAN 35 LB-FT (47 N•m). T
  - O-ring Fitting: Make sure all threads are clean. Inspect the O-ring. Replace the O-ring if it is damaged. Install the fitting in the brake housing. Tighten the fitting to 25-35 lb-ft (34-47 N•m). T
- Plug: Tighten to 20 lb-ft (27 N•m) minimum torque. The plug is opposite from the hydraulic line fitting. T

14. Check the brake housing for hydraulic fluid leaks according to the following procedure:

CAUTION

Use a hydraulic fluid with a mineral base to check the brake housing. Do not use automotive brake fluid. Using the wrong fluid damages the seals and decreases the life of the discs.

A. Connect an auxiliary power supply to the inlet fitting. Use a hydraulic or an air-over-hydraulic power supply. **Figure 37.**

Figure 37

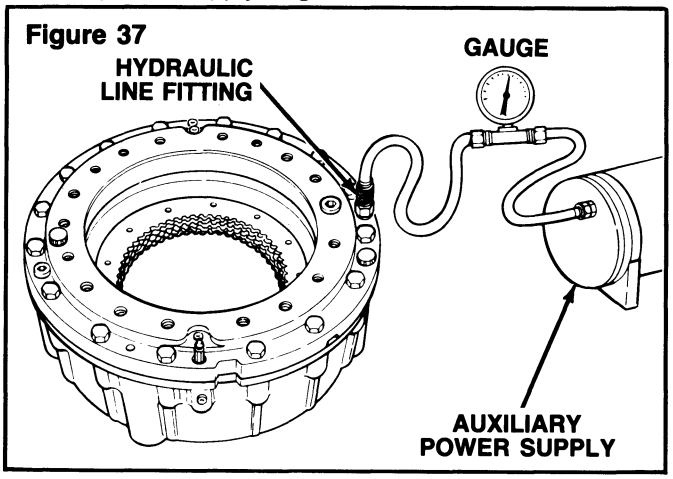

B. Connect a gauge with 0-2500 psi (0-17500 kPa) range between the brake housing and the power supply.

C. Apply a pressure of 2000-2200 psi (13790-15170 kPa) a minimum of five times to actuate the brake housing. Check the housing for leaks when the brake housing is actuated. If the housing does not leak, go to Step **D** of this procedure. If the housing leaks, disassemble the housing. Inspect the seals and the surfaces between the housing, the piston and the cover. Repair or replace components as necessary. Assemble the brake housing. Repeat Steps **A-C** of this procedure.

D. Apply and hold a pressure of 2000-2200 psi (13790-15170 kPa) for one minute. If the pressure does not decrease, go to Step **E**. If the pressure decreases, disassemble the housing. Inspect the seals and the surfaces between the housing, the piston and the cover. Repair or replace the components as necessary. Assemble the brake housing. Repeat Steps **A-D** of this procedure.

E. Apply and hold a pressure of 75-150 psi (518-1034 kPa) for one minute. If the pressure does not decrease, install the brake housing on the drive equipment. If the pressure decreases, disassemble the housing. Inspect the seals and the surfaces between the housing, the piston and the cover. Repair or replace the components as necessary. Repeat Steps **A-E** of this procedure.

Installing the Brake Housing

1. Apply a bead of silicone gasket material on cover of the brake housing where the cover is mounted to the drive equipment. The bead of gasket material also goes around each fastener hole. See Applying Silicone (RTV) Gasket Material on page 16. **Figure 38.**

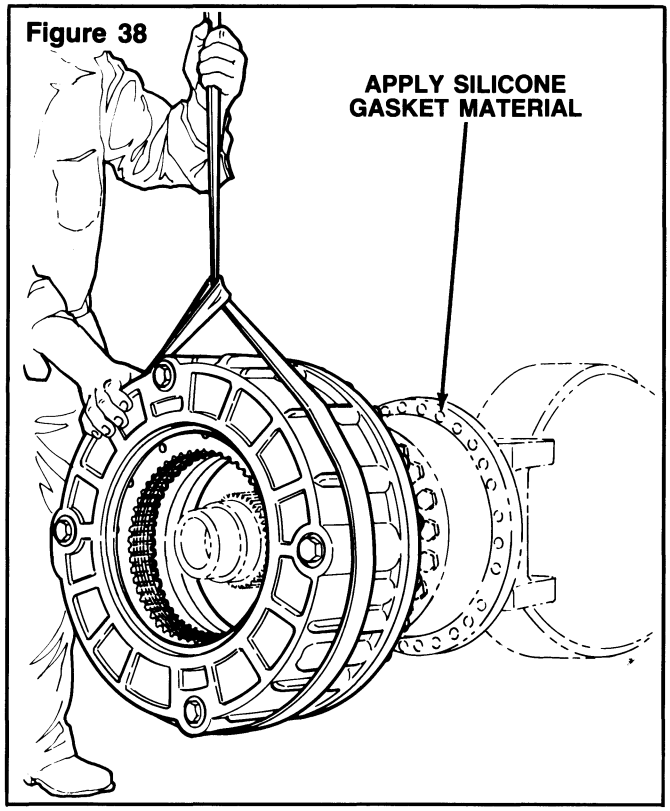

Figure 38

2. Attach a lifting device (chain fall and straps) on the brake housing and make sure that:
   - The bleeder screw is installed at the top of the housing.
   - The two drain plugs are installed at the bottom of the housing.
3. Use a lifting device to put the brake housing on the spindle. Make sure the bleeder screw and the drain plugs are in the correct position.
4. Apply silicone gasket material to the threads of the cover-to-drive equipment capscrews. Install the capscrews. Tighten to the specified torque. See **Section 8, Torque Chart.**
5. Before the inner and the outer face seals are installed, inspect and clean the following areas:
   A. The bore for the outer face seal in the disc driver and the bore for the inner face seal in the brake housing. Remove small marks in the bore with a fine emery cloth or india stone. If the marks cannot be removed, the assembly must be replaced. Clean the bore with a solvent that removes grease and a clean cloth. **Figure 39.**

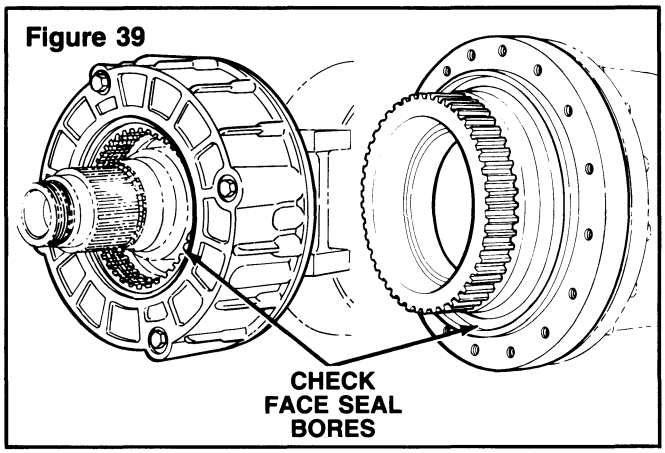

Figure 39

B. Inner and outer face seals. Clean the inner and the outer face seals with a solvent that removes grease and a clean, lint-free cloth. If new face seals are being installed, make sure the seals are clean.

6. Install the rubber element on the metal ring of the face seal. The lip on the outer diameter of the rubber element must be toward the sealing ring.

CAUTION

The rubber element must be installed on the metal ring before the face seal is installed. If the rubber element is installed when the face seal is installed in the housing or hub, fluid can leak between the housing and the hub.

7. Use a light oil to lubricate the metal rings in the areas where the rings touch each other when they are installed. **Figure 40.**

Figure 40

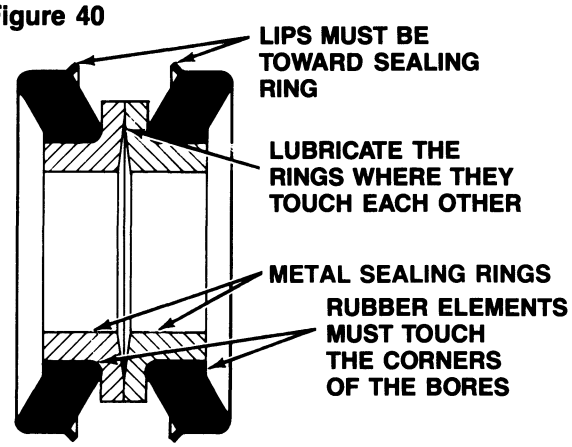

8. Put the disc driver and the brake housing so that the bore for the face seal is toward you.

9. Install the inner and the outer face seals as follows: **Figure 41.**

Figure 41

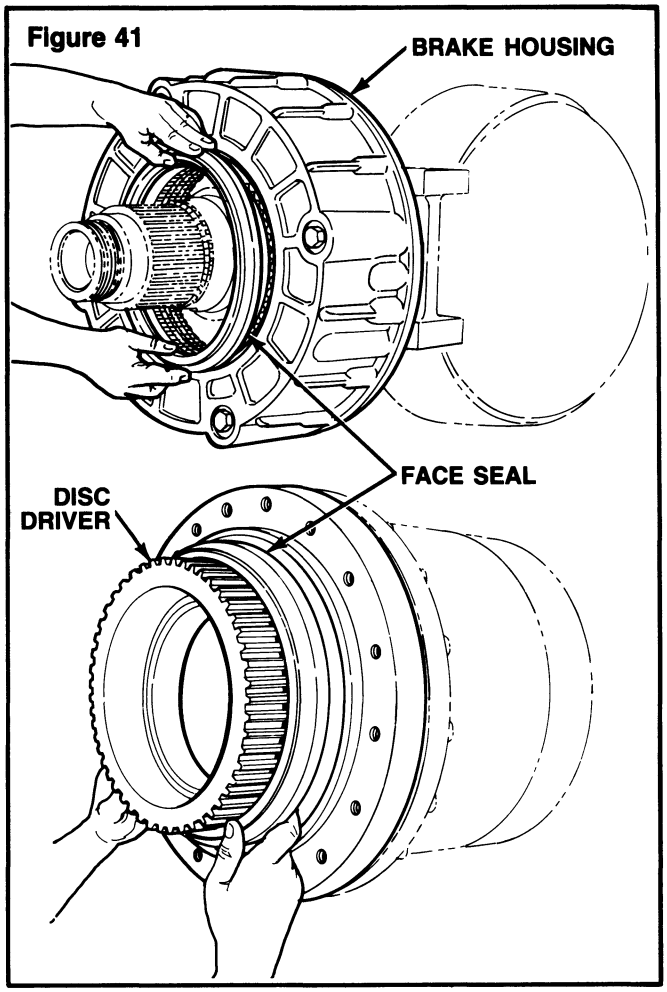

A. First put the rubber element of the seal into the bore.

B. To put the complete face seal into the bore, push the rubber element until the rubber element is installed in the corners of the bores.

CAUTION

Make sure the face seals do not fall when the disc driver is installed on the brake housing. The metal rings of the face seal are damaged when the face seals fall.

10. Install the disc driver and outer components of the drive equipment according to the procedures of the equipment manufacturer. Make sure the face seals in the disc driver and the brake housing touch each other. **Figure 42.**

Figure 42

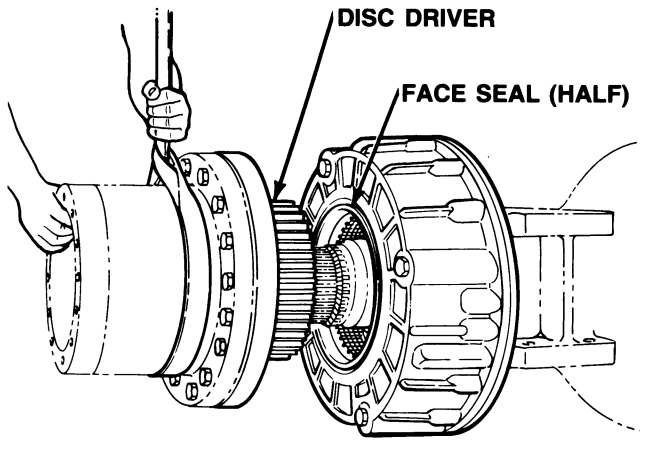

11. On brake housings with forced cooling systems, check the housing for leaks according to the following procedure.

NOTE:

Before the housing is checked for leaks, make sure all of the fasteners are tightened to the specified torque. See Section 8, Torque Chart.

A. Put a plug in the inlet and the outlet ports on the inboard side of the cover of the brake housing. **Figure 43.**

Figure 43

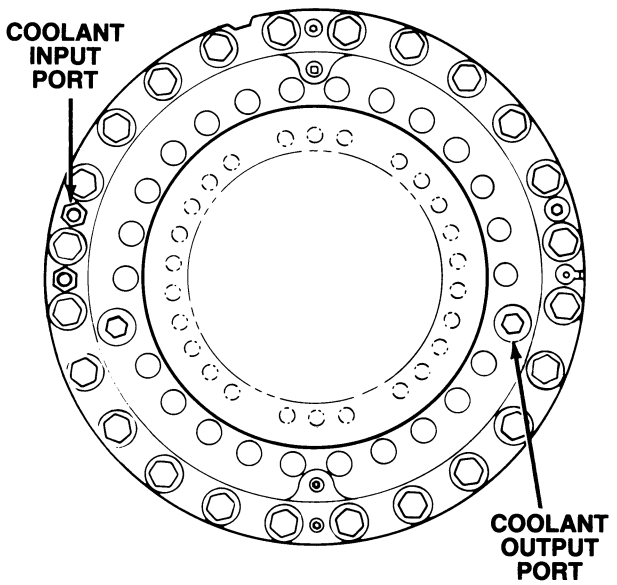

B. Remove the plug at the top of the cover of the brake housing. The plug is next to the bleeder screw. Install a 3/8-inch elbow and male fitting for an air hose. **Figure 44.**

Figure 44

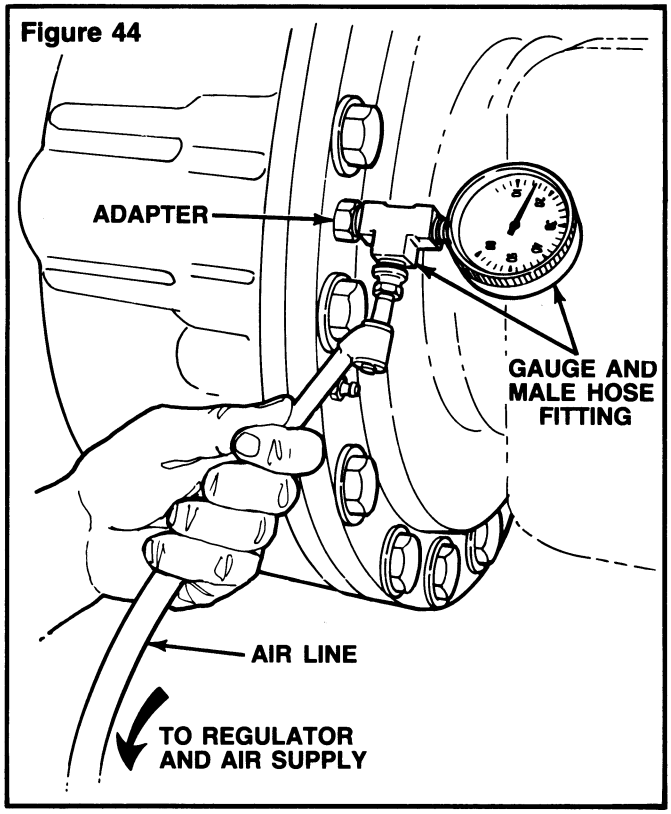

C. Connect an air pressure gauge and regulator assembly to the male fitting on the elbow. The gauge must measure pressure accurately to 15 psi (103 kPa). **Figure 44.**

D. Connect an auxiliary air supply system to the gauge and regulator assembly.

E. Apply 15 psi (103 kPa) of pressure to the brake housing. Turn the regulator to the CLOSED position. Look at the gauge for 3-5 minutes. The pressure in the brake housing must remain at 15 psi (103 kPa).

F. If pressure falls below 15 psi (103 kPa), find the cause of the loss of pressure. See the following procedure:

- Apply a soap and water solution to the capscrews, the fittings and the joints.
- Apply and hold 15 psi (103 kPa) of pressure in the brake housing.
- If bubbles appear at any location, service the cause of the leak.
- If bubbles do not appear at any location, disassemble the housing and replace the hub seal.

G. Remove the plugs from the inlet and outlet ports. Remove the air pressure gauge and regulator assembly.

12. On brake housing with forced cooling systems, connect the fluid inlet and the fluid outlet lines to the ports on the cover. The outer fitting is the inlet port. The inner fitting is the outlet port.

13. If the housing has clips, connect the hydraulic lines and the cooling system lines to the clips on the brake housing.

14. Connect the hydraulic line to the fitting on the cover of the brake housing.

NOTE:

Use the correct type of fluid and the specified amount of fluid in the disc drivers and the axle housing. See Section 9, Coolant and Hydraulic Fluid Specifications and the recommendations of the equipment manufacturer.

15. Fill the axle housing with fluid according to the following procedure.

NOTE:

Give enough time when the assembly is filled to make sure fluid flows through the complete assembly.

A. Make sure that the axle and the brake housing assembly is in a level position.

B. Remove the fill plug from the axle housing.

C. Fill the axle housing until fluid flows from the bottom of the hole for the fill plug.

D. Install the fill plug in the axle housing. Tighten the plugs to the specified torque. See the Torque Specifications of the equipment manufacturer.

16. Fill the disc driver assemblies with fluid according to the procedures of the equipment manufacturer.

17. Fill the brake housing with coolant according to the following procedure.

NOTE:

Use the specified coolant to fill the brake housing. See Section 9, Coolant and Hydraulic Fluid Specifications.

Sump Cooling Systems Without Hub Seals

NOTE:

On housings with hub seals most of the coolant is installed when the disc driver assemblies are filled with fluid.

A. Loosen the coolant fill plugs that are next to the fittings for the hydraulic fluid. If coolant flows from the bottom of the holes for the fill plugs, the coolant is at the specified level. If coolant does not flow from the bottom of the hole for the fill plug, remove the fill plug. Fill the housings until fluid flows from the bottom of the holes for the fill plugs. Install the fill plugs. **Figure 45.**

B. Tighten the coolant fill plugs in the brake housings to a minimum torque of 20 lb-ft (27 N•m). T

Sump Cooling Systems With Hub Seals

A. Remove the coolant fill plugs in the brake housings that are next to the inlet fittings for the hydraulic fluid.

B. Fill the brake housings with coolant until the coolant flows from the bottom of the holes for the fill plugs. **Figure 45.**

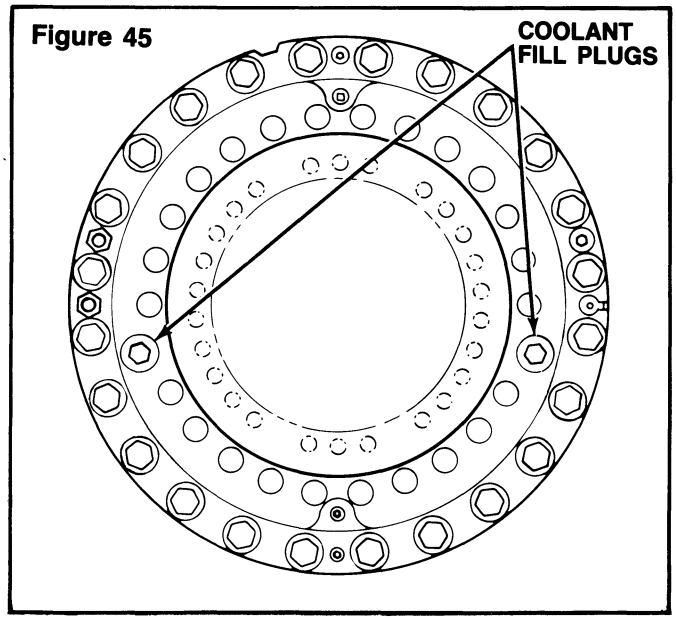

Figure 45

C. Install the coolant fill plugs in the brake housings. Tighten the fill plugs to a minimum torque of 35 lb-ft (47 N•m).

Forced Cooling Systems

A. Use the same amount of coolant that was removed when the brake housing was drained.

B. If the cooling system uses shut-off valves, make sure the valves are in the ON position so that fluid flows to the brake housing.

C. Fill the reservoir with the specified coolant. See **Section 9, Coolant and Hydraulic Fluid Specifications.**

D. Loosen the plug in the top of the cover of the brake housing. When the housing is filled, the loose plug permits air to be removed. **Figure 46.**

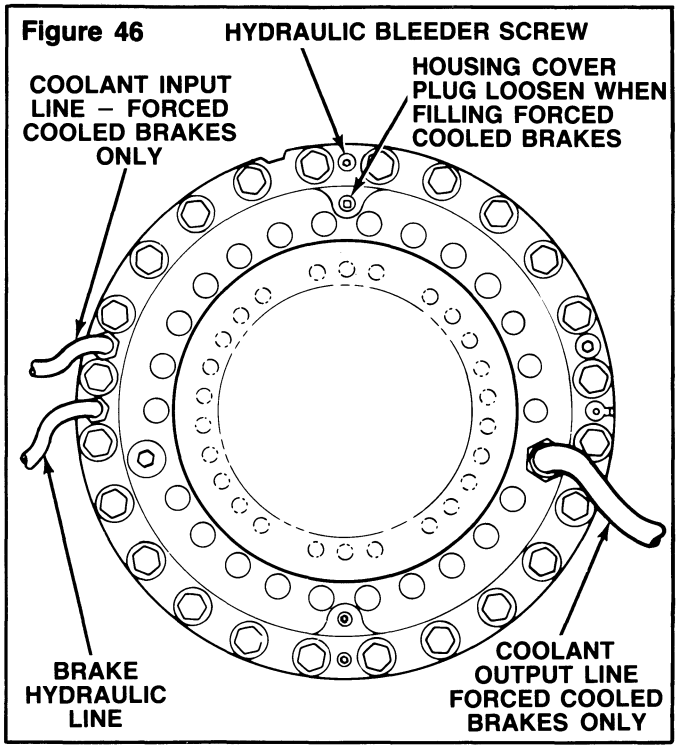

Figure 46

E. Put the transmission in the NEUTRAL position and start the engine. When the level in the reservoir goes down, add coolant to adjust the level to the specified position. See the recommendations of the equipment manufacturer for the specified level in the reservoir. Stop the engine when coolant leaks from the loose plug in the cover of the housing.

F. Tighten the plug at the top of the cover of the brake housing to a minimum torque of 20 lb-ft (27 N•m).

18. Remove the air from the brake system according to the procedure of the equipment manufacturer.

19. Install the tire and rim assembly. Install the fasteners and tighten to the torque specified by the equipment manufacturer.

20. Use a jack to raise the vehicle. Remove the safety stands. Lower the vehicle.

21. Check the brakes for correct operation.

section 8

Torque Chart

WDH BRAKE HOUSING — TORQUE SPECIFICATIONS

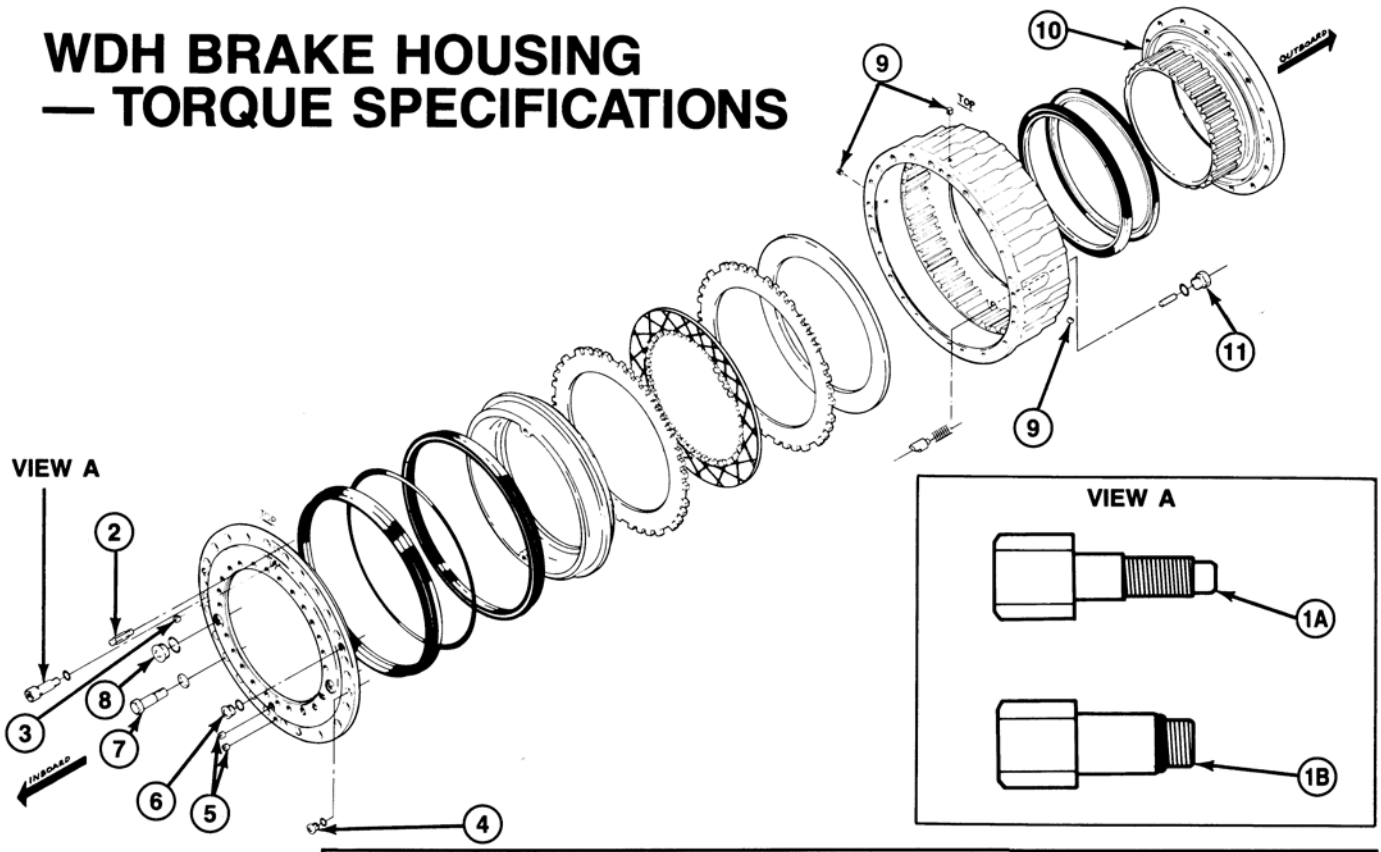

NUMBER	DESCRIPTION	TORQUE	
		Lb-Ft	N•m
1A	Hydraulic Inlet Fitting — Tapered Seat①	60-75	81-102
1B	Hydraulic Inlet Fitting — O-Ring	60-75	81-102
2	Hydraulic Bleeder Screw	15-20	20-27
3	Housing Cover Plug	20 MIN.	27 MIN.
4	Hydraulic Line Plug	60-75	81-102
5	Magnetic Coolant Drain Plugs	20 MIN.	27 MIN.
6	Coolant Inlet Port Plug	60-75	81-102
7	Cover-to-Housing Capscrew	380-400	515-542
8	Coolant Outlet Port Plug	60-75	81-102
9	Brake Housing Plug	10 MIN.	14 MIN.
10	Disc Driver②	475-500	644-678
11	Piston Return Spring Plug	60-75	81-102

NOTES

①Do not tighten hydraulic inlet fittings with tapered seats more than 75 lb-ft (102 N•m).

② Use Grade 8 fasteners to attach the wheel end to the disc driver.

Coolant and Hydraulic Fluid Specifications

section 9

Brake Coolant Specifications — Sump and Forced Cooling Systems with Hub Seals ① ② ③

Coolant	Specification
Mobile 424	See the recommendations of the manufacturer of the vehicle.

NOTES

① Tractor hydraulic transmission fluid, 'TOU' types, is recommended for use in the wet disc brake housing. Make sure that the specifications of the transmission fluid is the same as the recommended specifications of the manufacturer of the vehicle.

② A noise or a slip/stick condition can be corrected by the use of ASC P/N 239408

③ If coolant temperature reaches or exceeds 140°F (60°C) during operation, hub seals are required.

Brake Coolant Specifications — Sump Cooling Systems Without Hub Seals ① ② ③

Fluid Specifications			Specified Temperature Range	
American Petroleum Institute (API) Specification	Society of Automotive Engineers (S.A.E.) Specification	Rockwell Specification	Minimum Outside Temperature	Maximum Outside Temperature
API-GL-5	S.A.E. 80W/90	0-76-D	−15°F (−26°C)	None
API-GL-5	S.A.E. 75W	0-76-J	−40°F (−40°C)	+35°F (+2°C)

NOTES

① On sump cooling systems without hub seals, the brake coolant is not separated from the lubricant in the axle housing and the planetary wheel ends. For more information see Field Maintenance Manual #1, 'Lubrication'.

② If coolant temperature reaches or exceeds 140°F (60°C) during operation, hub seals are required.

③ ***WARNING***

In sump cooling systems, the operating temperature of the coolant must never reach or exceed 250°F (120°C). Use a forced cooling system if the temperature reaches or exceeds 250°F (120°C). In a sump cooling system, if the operating temperature of the coolant reaches or exceeds 250°F (120°C), the internal components of the brake will be damaged.

section 9 Coolant and Hydraulic Fluid Specifications

Coolant Change Intervals

Break-In Interval: Change the fluid in the brake housing after the first month or the first 200-250 hours of operation, whichever comes first.

Normal Maintenance Interval: Change the fluid every 6 months or every 3000 hours of operation, whichever comes first.

Hydraulic Fluid Specifications

USE ONLY THE BRAKE HYDRAULIC FLUID SPECIFIED BY THE MANUFACTURER OF THE VEHICLE. DO NOT USE DIFFERENT HYDRAULIC FLUIDS. THE WRONG FLUID WILL DAMAGE THE SEALS ON THE PISTON.