Pedal Assembly

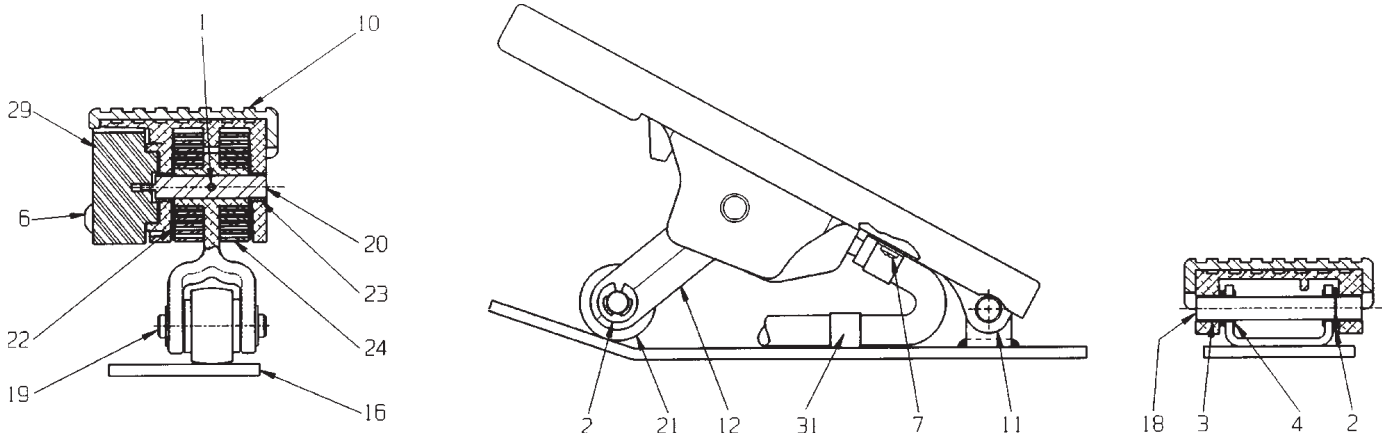

Item	Part No.	Qty	Description
	252418		**Pedal Assembly**
1	- - - - - -	1	. Pin, Spring
2	*a*c - - - - - -	3	. Snap Ring
3	*c - - - - - -	2	. Bushing
4	*c - - - - - -	2	. Bushing
6	*b - - - - - -	2	. Screw
7	- - - - - -	2	. Screw
10	244022	1	. Treadle Cover
11	- - - - - -	1	. Treadle
12	- - - - - -	1	. Lever
16	- - - - - -	1	. Base Plate
18	*c - - - - - -	1	. Pin, Treadle
19	*a - - - - - -	1	. Pin, Roller
20	- - - - - -	1	. Shaft, Sensor
21	*a - - - - - -	1	. Roller
22	244023	2	. Thrust Washer
23	244024	2	. Bushing
24	244025	2	. Spring
29	*b - - - - - -	1	. Sensor
31	- - - - - -	2	. Clamp, Wire
32	*d 587304	1	. Microswitch

*a Included in 244026 Roller Kit
*b Included in 244027 Sensor Kit
*c Included in 244028 Treadle Pin Kit
*d Not Illustrated